EcoStruxure™ Building-IoT Desk Occupancy Sensor

The IoT Desk Occupancy Sensor Solution is a compact, battery-based, easy-to-install wireless sensor that is used in a variety of spaces to measure accurate desk presence.

Regulatory Compliance and Safety Information

Electrical equipment should be installed, operated, serviced, and maintained only by qualified personnel. No responsibility is assumed by Schneider Electric for any consequences arising out of the use of this material.

Carefully read these instructions and all information relevant to this product before trying to install it. See the list of technical literature.

The technical literature and declarations of conformity can be accessed on the Schneider Electric Exchange website, ecoxpert.se.com. Contact your local Schneider Electric sales office for a hard copy of the documentation or for additional information.

Dimensions

mm (inches)

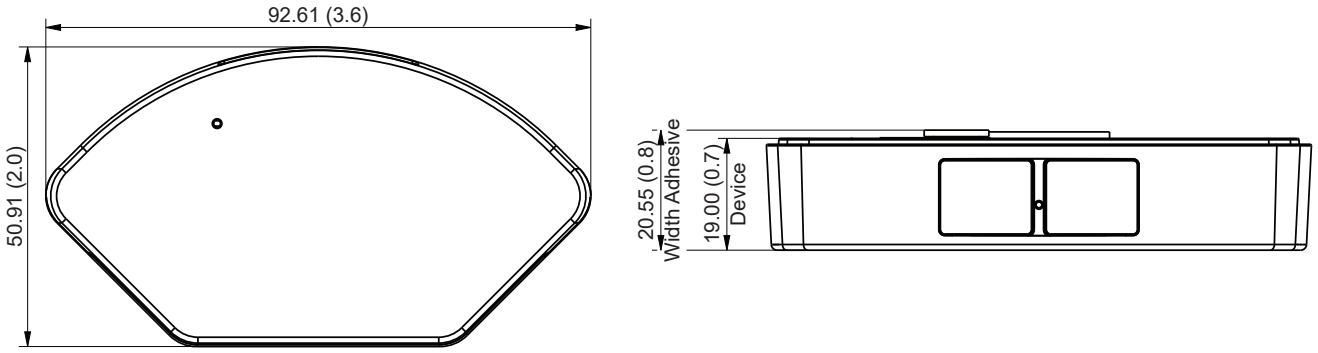

Installation Restrictions

NOTICE

REDUCED DEVICE PERFORMANCE

- This device is for indoor use only and is not suitable for wet locations.
- Before installation, do not expose the thermal image sensor on the device to direct sunlight for more than a few seconds.
- Do not install the device close to an exterior window or facing heating devices.
- Do not install the device on a metal surface.
- Always install the device with the sensor window facing FRONT as indicated on the product.
- Ensure that the device is not tilted.
- Keep all sensors on the device clean of dust, paint, and other contaminants.
- When replacing a device, install the new device in the same position and direction as the replaced device.
- Do not use rechargeable or alkaline batteries, mix and match batteries, or place new batteries in with old ones.
- It is recommended to use the L91 batteries provided with the device to meet the required performance.
- Do not lift or bend device parts.
- Avoid using sharp objects to press the button.
- Avoid touching the sensor window surfaces.
- Do not press the LED with anything.

Failure to follow these instructions can result in reduced device performance or equipment damage.

Opening/Closing the Cover

The device is opened and closed by sliding the cover parts.
Do not try to lift or bend device parts. Pull from the sides to open.

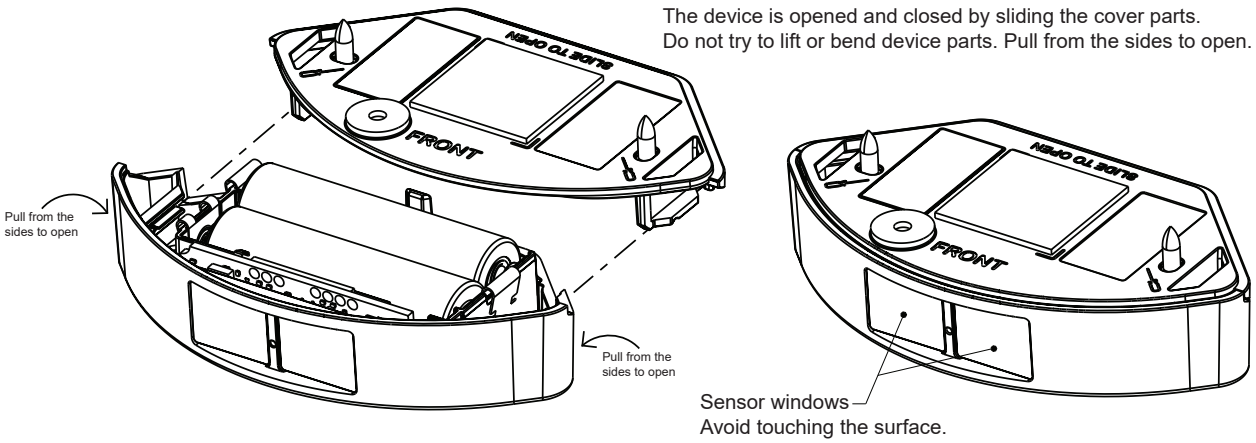

Installing the Batteries

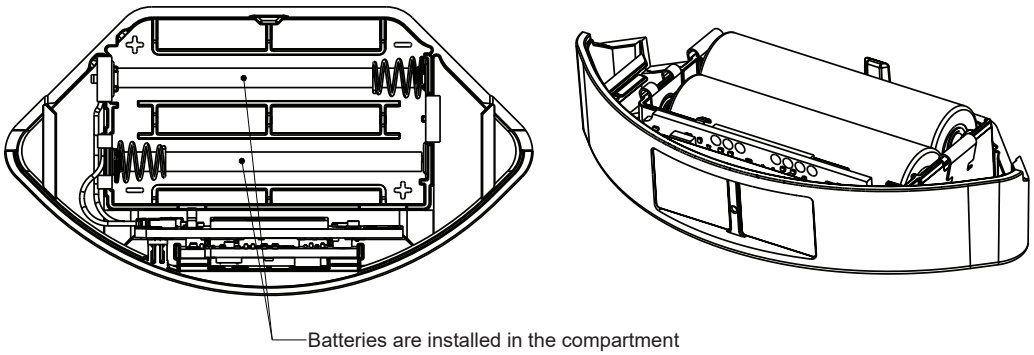

⚠ DANGER

DISPOSAL OF BATTERIES

- Disposal of a battery into fire or a hot oven, or mechanically crushing or cutting of a battery can result in an explosion.
- Leaving a battery in an extremely high temperature surrounding environment can result in an explosion or the leakage of flammable liquid or gas.
- A battery subjected to extremely low air pressure may result in an explosion or the leakage of flammable liquid or gas.

Failure to follow these instructions will result in death or serious injury.

Mounting the Device

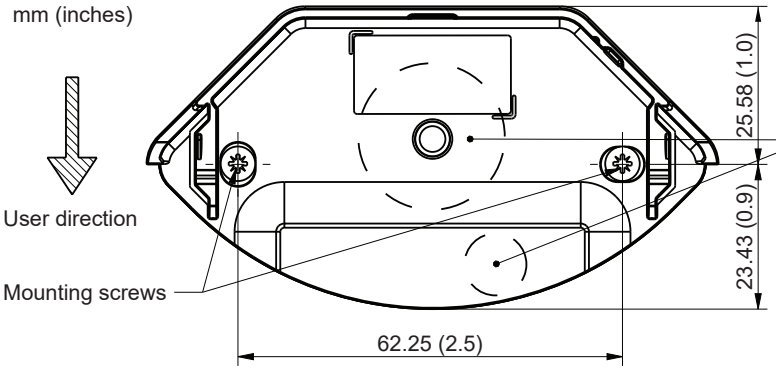

Important!

- When using adhesive tape to mount the device, press both marked areas for 5-10 seconds to help ensure proper adhesion to the surface.
- If mounted using screws, press for 5-10 seconds only on the bottom right area to help ensure proper adhesion of the magnet to the surface.

Using Screws

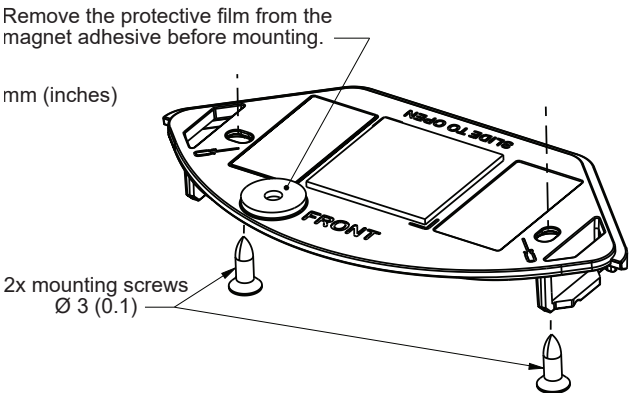

Using Adhesive

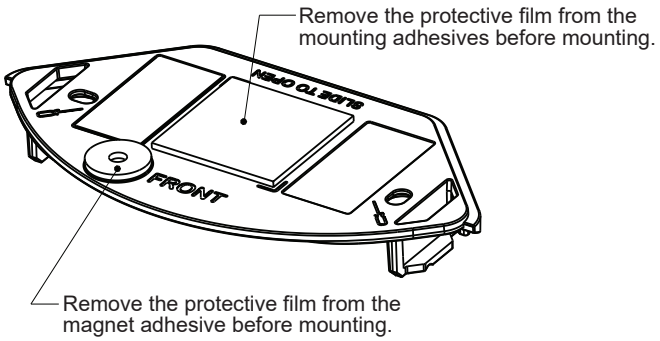

Device Field-of-View

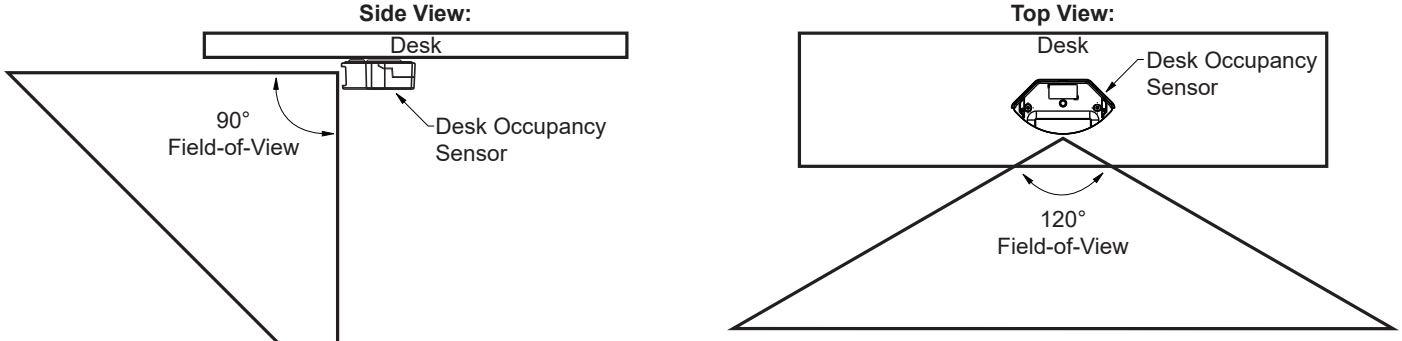

Commissioning the Device

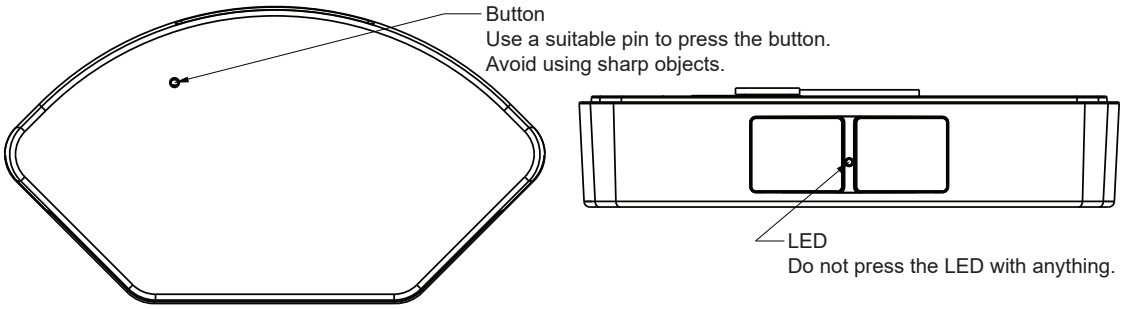

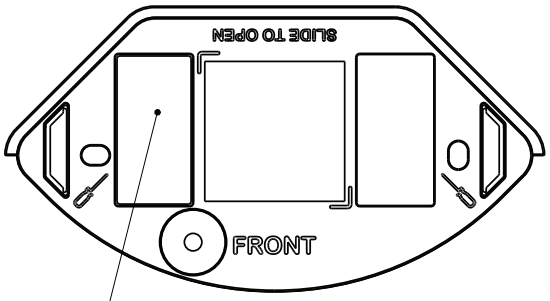

Scan or register the device ID from the product label located inside the recess on the front of the device.

Part Numbers

Product	Part Number
EcoStruxure Building-IoT Sensor Solution, Desk Occupancy	EBIOTPCWD

LED Behaviors

Operation	Button	LED	Description
Current connection status	Short press of <3s	Blinking red every 1s for 5s	The sensor is not connected to a network
		Blinking green every 1s for 5s	The sensor has successfully connected to a network
Starts the connection process	Medium press of >3s and <20s	Blinking yellow every 1s	The sensor is attempting to connect to a network
		Blinking green every 1s for 5s	The connection process was successful
		Blinking red every 1s for 5s	The connection process failed
Wireless network settings reset	Long press of >10s	Solid red for 5s	After 5 seconds, all Wireless network settings are reset to default values and the device is rebooted

General Specifications

Motion detection

Sensor
Thermopile
Maximum detection distance
60 cm (1.97 ft), open space

Field-of-view

Horizontal view
120°
Vertical view
90°

Material

Enclosure
ABS (Acrylonitrile-Butadiene-Styrene)
Ingress protection rating
IP 20
Color
White
Surface finish
Glossy

Mechanical

Dimensions
92.61 L x 50.91 W x 19.00 H mm
(3.6 L x 2.0 W x 0.7 H in)
Weight
60 g (0.13 lb)
LED indicator
Red, green and yellow
Button
1

Electrical

Powered by
2x 1.5V AA L91 Lithium batteries
Estimated battery life span
Up to 5 years[a]

Wireless connectivity

Communication protocol
2.4 GHz, Sensor Network supporting Mesh Technology
Wireless communication range, indoor
15 sq. m (50 sq. ft), open space
Output power
Up to 8 dBm

Environment

Environmental conditions
Indoor use only
Ambient temperature, operating
0 to 50 °C (32 to 122 °F)
Humidity, operating
20 to 80 % Relative Humidity (non-condensing)
Ambient temperature, storage
-20 to 60 °C (-4 to 140 °F)
Humidity
0 to 95 % Relative Humidity (non-condensing)

Installation

Placement
In a variety of furniture and spaces, such as workstations, office cubicles, touchdown desks, and phone booths
Tamper detection
Tamper status reporting for product removal after installation and commissioning.
Installation equipment, included
Mounting tape, screws, 2 x 1.5V AA L91 batteries, installation instructions

a. Actual lifespan could vary. The amount of activity may affect the battery lifespan.

Addendum - California Proposition 65 Warning Statement for California Residents

⚠ **WARNING**: This product can expose you to chemicals including Styrene, which is known to the State of California to cause cancer. For more information, go to www.P65Warnings.ca.gov.

部件名称 (Part Name)	有害物质 (Hazardous Substances)					
	铅 (Pb)	汞 (Hg)	镉 (Cd)	六价铬 (Cr (VI))	多溴联苯 (PBB)	多溴二苯醚 (PBDE)
塑料部件 (Plastic Parts)	O	O	O	O	O	O
电子件 (Electronics)	X	O	O	O	O	O

本表格依据 SJ/T11364 的规定编制。 (This table is made according to SJ/T 11364.)

O: 表示该有害物质在该部件所有均质材料中的含量均在 GB/T 26572 规定的限量要求以下。
(Indicates that the concentration of hazardous substance in all of the homogeneous materials for this part is below the limit as stipulated in GB/T 26572.)

X: 表示该有害物质至少在该部件的某一均质材料中的含量超出 GB/T 26572 规定的限量要求。
(Indicates that the concentration of hazardous substance in at least one of the homogeneous materials used for this part is above the limit as stipulated in GB/T 26572.)

Regulatory Notices

This equipment has been tested and found to comply with the limits for a Class B digital device, pursuant to part 15 of the FCC Rules. These limits are designed to provide reasonable protection against harmful interference in a residential installation. This equipment generates, uses and can radiate radio frequency energy and, if not installed and used in accordance with the instructions, may cause harmful interference to radio communications. However, there is no guarantee that interference will not occur in a particular installation. If this equipment does cause harmful interference to radio or television reception, which can be determined by turning the equipment off and on, the user is encouraged to try to correct the interference by one or more of the following measures: reorient or relocate the receiving antenna; increase the separation between the equipment and receiver; connect the equipment into an outlet on a circuit different from that to which the receiver is connected; consult the dealer or an experienced radio/TV technician for help.

This device complies with part 15 of the FCC Rules. Operation is subject to the following two conditions: (1) This device may not cause harmful interference, and (2) this device must accept any interference received, including interference that may cause undesired operation. Cet appareil est conforme à la norme RSS exempte de licence d'Industrie Canada. L'opération est sous réserve des deux conditions suivantes: (1)

Cet appareil ne doit pas causer d'interférences; et (2) Cet appareil doit accepter toute interference fonctionnement indésirable de l'appareil.

© 2024 Schneider Electric. All rights reserved. Trademarks and registered trademarks are the property of their respective owners.
www.se.com/buildings

Life Is On Schneider Electric