SSO600/STO600



PART NUMBER

Part Number	Model Number
5126050000	SSO600
5126000000	STO600

SPECIFICATIONS

Control Function

PSTO600: . . . . . Outside Temperature
SSO600: . . . . . Solar Gain Effect
Resistance at 20 C 5573Ω
Temperature Sensing Range. . . . . .-40 to 55°C
Compatible Controllers . . . . . BAS, CSC, CSMC, IAC, KMC, MMC, Satchwell Σ (Sigma.)
Protection Class . . . . . IP 65
Sensing Element. . . . . Negative Temperature Coefficient thermistor
Max. Sensing Temperature . . . . . 55°C
Min. Sensing Temperature . . . . . -40°C
Wiring . . . . . 2-wire non-polarised low voltage dc (Safety Extra Low Voltage (SELV)).
Ambient Temperature Limits . . . . . -40 to 55°C -at Head
Max. Temperature in Storage/Transit. . . . . 55°C
Min. Temperature in Storage/Transit . . . . . -40°C
Max. Humidity in Operation. . . . . 95% RH
Min. Humidity in Operation . . . . . 0% RH
Max. Humidity in Storage/Transit . . . . . 95% RH
Min. Humidity in Storage/Transit . . . . . 0% RH
Head . . . . . Moulded base with screw on lid.
Head Material . . . . . Nylon 6/Nylon 66 Copolymer. SSO600 has a clear Polycarbonate lid.
Head Colour . . . . . White. SSO600 has a clear lid.
Terminals . . . . . Terminal block accepts 2 x 1 mm 2 wires, larger sizes not recommended.
Accessories . . . . . .None
Characteristics . . . . . Non linear

Outside Sensors (Sun, Temperature)

These sensors are for use with Satchwell controllers to provide relevant temperature influence on the heating and air conditioning plant, in accordance with availing weather conditions. The SSO solar sensors have particular advantages to combat the specific effect of solar heat gain. Their application is a true benefit to modern glass/translucent buildings where solar gain is a negative influence on comfort and occupant efficiency. Energy savings will be realized by allowing for solar contributions. All these sensors can be used in conjunction with Satchwell controllers to influence set points, for monitoring or for direct override of plant schedules. The IP 65 rated designs are durable, reliable and accurate.

These sensors are available with the standard Satchwell temperature sensor output characteristic.

Characteristics

Sensor Temperature vs Resistance

SSO600: -40 to +55°C
STO600: -40 to +55°C

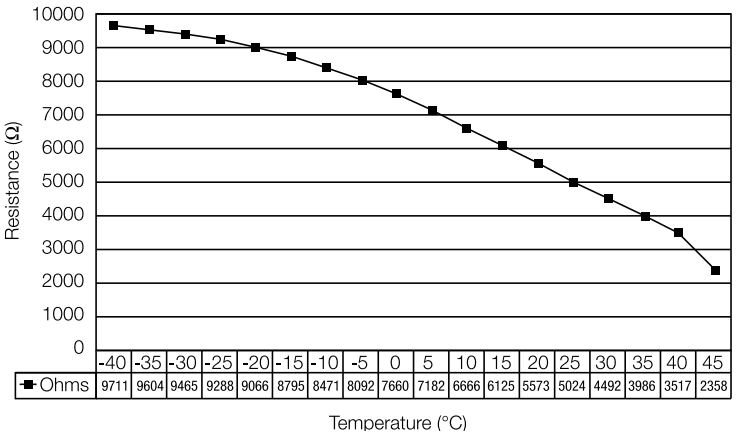

	-40	-35	-30	-25	-20	-15	-10	-5	0	5	10	15	20	25	30	35	40	45
Ohms	9711	9604	9465	9288	9066	8795	8471	8092	7660	7182	6666	6125	5573	5024	4492	3986	3517	2358

Features

Very fast response to temperature change.

Head design has easily removable lid. (SSO designs have clear lid).

Fully Backwards compatible.

Small Physical Size.

Simple wiring connections.

Simple commissioning.

IP 65 as standard.

DIMENSIONS mm (in)

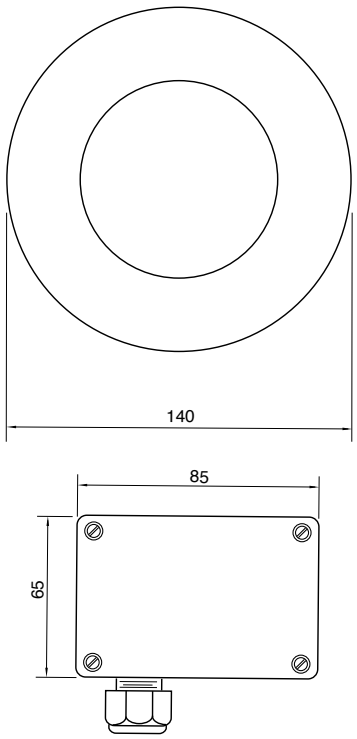

Wiring Precautions

Refer to the datasheet relevant to the controller to which the sensor is to be connected (see table on page 2).

Maximum resistance, 150 per core.

Cautions

Do not apply any voltages until a qualified technician has checked the system and the commissioning procedures have been completed.

This sensor must only be used in conjunction with the appropriate controllers.

Observe wiring precautions given on the datasheet for the controller that the sensor will be connected to.

Do not exceed the maximum ambient temperatures.

Interference with parts under sealed covers invalidates the guarantee.

Design and performance of equipment is subject to improvement and therefore liable to alteration without notice.

Information is given for guidance only and we do not accept responsibility for the selection and installation of products unless information has been given in writing relating to a specific application.

A periodic system and tuning check of the control system is recommended. Please contact your local sales office for details.

© 2011 Schneider Electric. All rights reserved.