en

merten™

Multiple control relay for roller shutters REG

Operating instructions

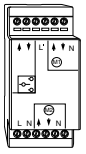

Art. no. 576397

For your safety

⚠ ⚠ DANGER

HAZARD OF ELECTRIC SHOCK, EXPLOSION, OR ARC FLASH

Safe electrical installation must be carried out only by skilled professionals. Skilled professionals must prove profound knowledge in the following areas:

- Connecting to installation networks
- Connecting several electrical devices
- Laying electric cables
- Safety standards, local wiring rules and regulations

Failure to follow these instructions will result in death or serious injury.

Notice

HAZARD OF EQUIPMENT DAMAGE

- Ensure that the device is disconnected from its circuit during the insulation resistance test.

Failure to follow these instructions can damage the device.

Multiple control relay introduction

Up to two roller shutter motors can be operated using the multiple control relay for roller shutters REG (called the **Multiple control relay** in the following).

You can combine roller shutter motors to form group installations. These can be single groups or centrally controlled subgroups. It offers:

– Maximum performance reliability
– Slim design, just 36 mm wide
– Switching capacity up to 2 A
– Complete separation of load and control circuits
– Forced locking in both directions of movement, to protect your motors and control units

The central command operates in priority. For individual operation of motors use only roller shutter rocker buttons.

Multiple control relay installation

It is installed on a DIN rail in accordance with EN 60715.

Connections

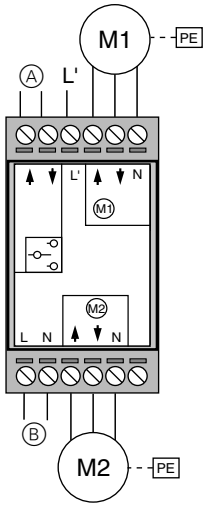

Ⓐ Input central command control voltage 230 V, priority
L' Switched phase
N Neutral conductor
Ⓜ Motor
▲ Motor direction Up
▼ Motor direction Down
PE PE conductor
Ⓑ Mains supply: phase (L), neutral conductor (N)

Configuration examples

Notice

The motors can become damaged

- For individual operation of motors, use only roller shutter push-buttons. If you use blind switches for individual operation, the motor could be damaged.
- Conventional roller shutter motors must not be connected in parallel and operated using a conventional roller shutter push-button. Otherwise, electrical feedback effects could destroy the motor.

Failure to follow these instructions can damage the device.

ℹ When laying out the entire installation, the total phase load must be taken into account.

Example 1

Central control of any number of motors using a central command, e.g. with a blind time switch or a blind push-button or a roller shutter rocker button. Individual operation of motors is carried out using a roller shutter rocker button.

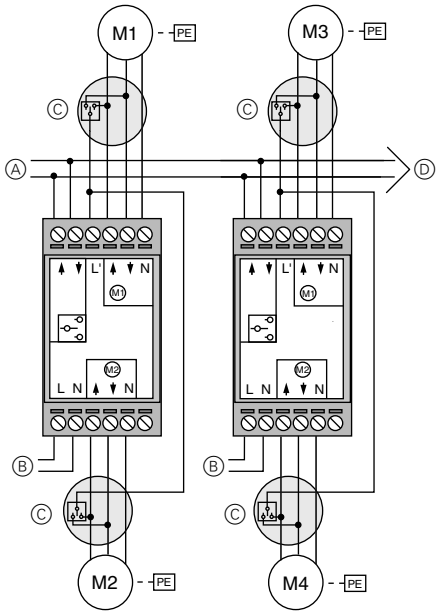

Ⓐ Input central command control voltage 230 V, priority
Ⓑ Mains supply: phase (L), neutral conductor (N)
Ⓒ Push-button, individual operation
Ⓓ To further devices

BRU50001-00-UG-en 10/24

Example 2

Central control of any number of motors which are grouped into decentralised groups. Additionally, a roller shutter rocker button can be used for the individual operation of the motors. The central command operates in priority.

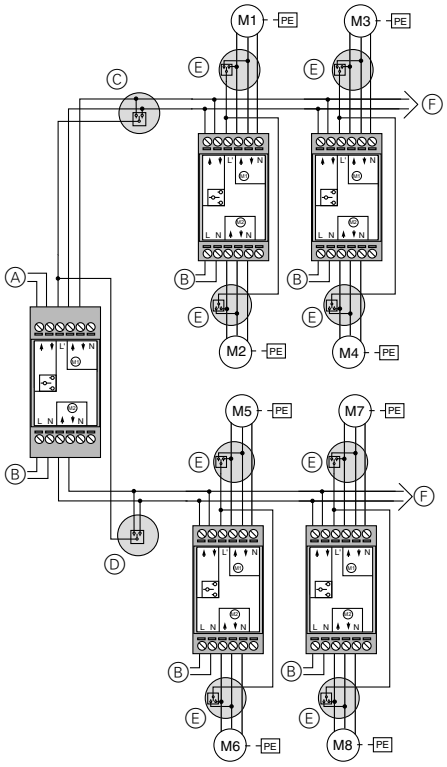

Ⓐ Input central command control voltage 230 V, priority
Ⓑ Mains supply: phase (L), neutral conductor (N)
Ⓒ Push-button, group 1
Ⓓ Push-button, group 2
Ⓔ Push-button, individual operation
Ⓕ To further devices

Example 3

Example system with the following features:

– Time control of entire installation using blind time switch with sensor connection.
– Twilight function for the entire installation via a sun/twilight sensor.
– Wind monitoring functionality for the entire installation by means of a wind sensor and the wind sensor interface. The wind monitoring function operates in priority.
– Group control of motors, which are grouped into two subgroups, via roller shutter rocker button.
– Individual operation of all motors of the entire installation via "local" roller shutter rocker button.

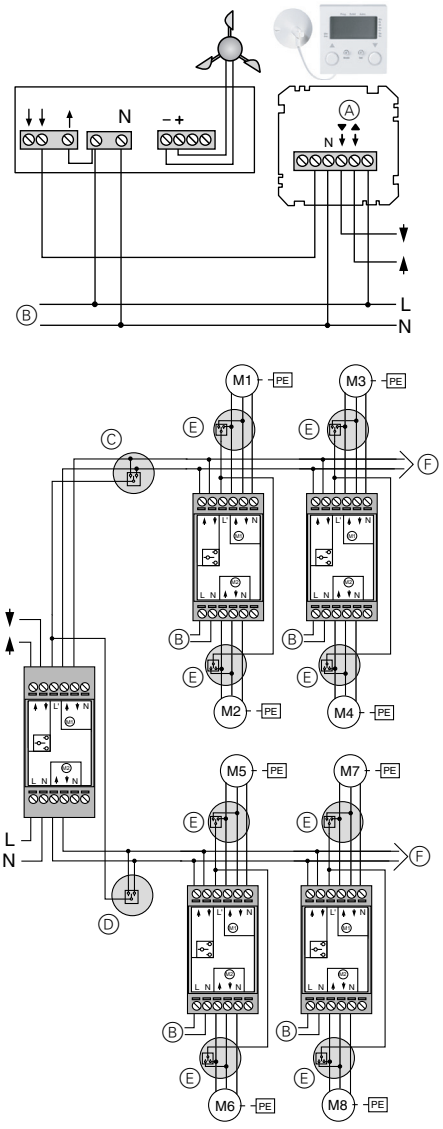

Ⓐ Motor
Ⓑ Mains supply: phase (L), neutral conductor (N)
Ⓒ Push-button, group 1
Ⓓ Push-button, group 2
Ⓔ Push-button, individual operation
Ⓕ To further devices

Technical data

Mains voltage:	AC 230 V, 50 Hz ± 10%
Current consumption:	10 mA in relay mode
Switching voltage:	max. AC 250 V
Switching capacity:	max. 2 A
Temperature range:	0 °C to 60 °C
Screw terminals:	max. 1.5 mm^2
Device width:	2 TE = approx. 36 mm

Dispose of the device separately from household waste at an official collection point. Professional recycling protects people and the environment against potential negative effects.

Merten GmbH

Fritz-Kotz-Str. 8
51674 Wiehl - Germany
se.com/contact

Schneider Electric

BRU50001-00-UG-en 10/24