

Acti9
Encapsulated Chassis

Catalogue 2023

se.com/nz

Life Is On Schneider Electric

Encapsulated Chassis

Functions and characteristics

Function

The enclosed system and shrouding of live parts provide higher levels of protection against direct contact and reduced potential hazards for electrical maintenance workers. The encapsulated chassis range caters to all your customers' electrical safety needs. It's also Australian-made to suit Australian standards and is adaptable to most commercial/industrial applications.

Description

The encapsulated chassis range is adapted to a large variety of requirements and is already included in our Schneider Electric distribution boards.

Technical data

- Available in single feed and dual feed
- Main Busbar rating 250 A and 400 A
- Available in various sizes up to 108 poles
- Short circuit withstand: 25 kA for 0.1 s
- Cover is provided along with the chassis for direct connection to NSX250 MCCB or INS250 switches
- Busbar shroud kit is available to maintain IP2X on unused incomer connections or Form of separation when the main switch is installed remotely
- Connection kit 400CK2 to NSX400 MCCB or INS400 Switch
- Tee-offs 50% with end-caps

Compliance with AS/NZS 61439

Design Verification Guidelines are available to assist assembly manufacturers to carry out their design verification for the final completed assembly in accordance with AS/NZS 61439 series when using Schneider Electric's chassis and low voltage devices.

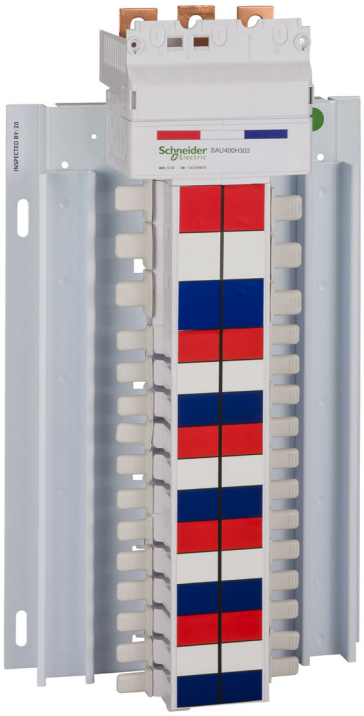

Chassis connection

Main incomers connected to the busbar

- 3P, 4P INS250 (INS250-100 A, -160 A, -200 A, -250 A) INS320 & INS400 Switch disconnectors
- 3P, 4P NSX & NSX DC MCCBs, (100 A, 160 A, 250 A, 400 A)

Choice of circuit protections

Suitable for all Acti 9 circuit protections,

- 1P, 2P, 3P, 4P iC60, 2P C60H-DC, 18 mm poles MCBs
- 1P, 2P, 3P C120, 27 mm poles MCBs
- 1P, 3P Vigi iC60, 18 mm poles Add-on RCDs,
- iC60, 18 mm poles RCBOs

Hybrid chassis can accommodate 18 and 27 mm poles devices.



Standard compliance

The encapsulated chassis has been tested in assemblies up to 400 A in accordance with AS/NZS 61439-1

Acti9 Circuit Protection

Suitable for use with standard Schneider Electric circuit protection MCBs, Add-on RCDs and RCBOs

Wide offer

Three-phase chassis come in various sizes from in 12 to 108 poles 18 mm, 27 mm or hybrid chassis

Universal feed option

The encapsulated chassis is available as a single end feed or dual feed for total flexibility

Flexible chassis

Coloured phase identification labels are not attached to single feed chassis, so customers have the choice of top or bottom feed connection.

Technical data

Main characteristics	
Rated voltage (Ue)	415 V a.c. 50 Hz
Rated insulation voltage (Ui)	500 V
Rated impulse withstand voltage (Uimp)	6 kV
Rated current of the assembly (InA) Max full assembly achieved based on AS/NZS 61439 Verification designs (1)	up to 250 A with INS250 Switch disconnector up to 330 A with INS400 Switch disconnector
Rated short time withstand current (Icw)	25 kA @ 0.1 s
Form of separation	2bi and 4aih
Pollution degree	3
Material group	IIIa
Resistance to abnormal heat and fire	**Glow Wire test:** 960 °C for chassis insulation 650 °C for tee-off end caps
Chassis Power Loss	Power or watts losses are dependent on the chassis size, length and current loading.

(1) Based on AS/NZS 61439 Design Verification guidelines:

- SAU250 MCB Chassis - Design Verification Guidelines
- SAU400 MCB Chassis - Design Verification Guidelines

Naming conventions for Chassis

Standard chassis

SAU250 24 18 3 DF

Encapsulated Chassis	No of Poles	Busbar Pitch	Phase	Feed
SAU250: Main Busbar rating 250 A SAU400: Main Busbar rating 400 A SAU3DC: Main Busbar rating 250 A	12 18 24 30 36 42 48 60 72 84 96 108	18 27	3: 3 Phase 2: 2 Phase or 1P+N	(Blank): Top or bottom feed (DF): Dual feed

Chassis 250 A 3 Ph, 18 mm for iC60 MCBs, RCBOs & Add-on Vigi block



SAU25024183

Pole capacity (18mm)	Top or Bottom Feed	Dual Feed
12 poles	SAU25012183	SAU25012183DF
18 poles	SAU25018183	SAU25018183DF
24 poles	SAU25024183	SAU25024183DF
30 poles	SAU25030183	SAU25030183DF
36 poles	SAU25036183	SAU25036183DF
42 poles	SAU25042183	SAU25042183DF
48 poles	SAU25048183	SAU25048183DF
60 poles	SAU25060183	SAU25060183DF
72 poles	SAU25072183	SAU25072183DF
84 poles	SAU25084183	SAU25084183DF
96 poles	SAU25096183	SAU25096183DF
108 poles	SAU250108183	SAU250108183DF

Compatible devices for outgoing poles		
for MCB	for RCBO	for Add-on Vigi block
1P, 2P, 3P iC60	1P+N iC60	1P+N, 3P+N iC60







Chassis 400 A 3 Ph, 18 mm for iC60 MCBs, RCBOs & Add-on Vigi block

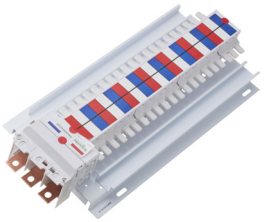

SAU40024183

Pole capacity (18 mm)	Top or Bottom Feed	Dual Feed
12 poles	SAU40012183	SAU40012183DF
18 poles	SAU40018183	SAU40018183DF
24 poles	SAU40024183	SAU40024183DF
36 poles	SAU40036183	SAU40036183DF
48 poles	SAU40048183	SAU40048183DF
60 poles	SAU40060183	SAU40060183DF
72 poles	SAU40072183	SAU40072183DF
84 poles	SAU40084183	SAU40084183DF
96 poles	SAU40096183	SAU40096183DF

Compatible devices for outgoing poles		
for MCB	for RCBO	for Add-on Vigi block
1P, 2P, 3P iC60	1P+N iC60	1P+N, 3P+N iC60







Chassis 400 A 3 Ph, 27 mm for C120 MCBs

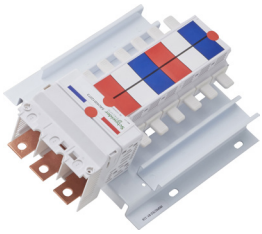

SAU40012273

Pole capacity (27 mm)	Top or Bottom Feed	Dual Feed
12 poles	SAU40012273	SAU40012273DF
18 poles	SAU40018273	SAU40018273DF
24 poles	SAU40024273	SAU40024273DF
36 poles	SAU40036273	SAU40036273DF
48 poles	SAU40048273	SAU40048273DF
60 poles	SAU40060273	SAU40060273DF
72 poles	SAU40072273	SAU40072273DF

Compatible devices for outgoing poles		
for C120 MCB	for RCBO	for Add-on Vigi block
1P, 2P, 3P	–	–



Hybrid & Phase Neutral Chassis

SAU250 08 43N DF

Encapsulated Chassis	No of Poles	Pole Configuration	Feed
SAU250: Main Busbar rating 250 A SAU400H: Main Busbar rating 400 A Hybrid	08 12 16 18 24 30 32 36 40 42 48 56 60 64 72	3: 3 Phase 41N: 3*(1Ph+N) 43N: 3Ph+N	Blank: Top or bottom feed DF: Dual feed

Chassis 250 A Phase Neutral 3*(1 Ph+N), 18 mm for iC60 MCBs, RCBOs & Add-on Vigi block (N. R. N. W. N. B.)



SAU2501641NDF

Pole capacity (18 mm)	Top Feed	Dual Feed
16 poles	SAU2501641N	SAU2501641NDF
24 poles	SAU2502441N	SAU2502441NDF
32 poles	SAU2503241N	SAU2503241NDF
40 poles	SAU2504041N	SAU2504041NDF
48 poles	SAU2504841N	SAU2504841NDF
56 poles	SAU2505641N	SAU2505641NDF
64 poles	SAU2506441N	SAU2506441NDF
72 poles	SAU2507241N	SAU2507241NDF

Compatible devices for outgoing poles		
for MCB	for RCBO	for Add-on Vigi block
2P iC60	2P iC60	1P+N iC60







Note:

Due to the neutral distribution, this range is Top Feed only. Chat with us to order a Bottom Feed product.

Chassis 250 A Phase Neutral 3 Ph+ N, 18 mm for 4P iC60 MCBs & Add-on Vigi block (N. R. W. B.)

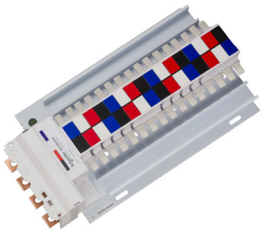

SAU2503243N

Pole capacity (18 mm)	Top Feed
8 poles	SAU2500843N
16 poles	SAU2501643N
24 poles	SAU2502443N
32 poles	SAU2503243N
40 poles	SAU2504043N
56 poles	SAU2505643N
64 poles	SAU2506443N
72 poles	SAU2507243N

Compatible devices for outgoing poles		
for MCB	for RCBO	for Add-on Vigi block
4P iC60	–	3P+N iC60





Note:

Due to the neutral distribution, this range is Top Feed only. Chat with us to order a Bottom Feed product.

Chassis 400 A 3 Ph, Hybrid 18 & 27 mm for iC60 and C120 MCBs, iC60 RCBOs & Add-on Vigi block



SAU400H723

Pole capacity		Top or Bottom Feed	Dual Feed
18 mm	27 mm		
12 poles	6 poles	SAU400H183	SAU400H183DF
24 poles	6 poles	SAU400H303	SAU400H303DF
30 poles	12 poles	SAU400H423	SAU400H423DF
36 poles	12 poles	SAU400H483	–
60 poles	12 poles	SAU400H723	SAU400H723DF
72 poles	12 poles	SAU400H843	SAU400H843DF

Compatible devices for outgoing poles			
for MCB		for RCBO	for Add-on Vigi block
1P, 2P, 3P iC60	1P, 2P, 3P C120	1P+N iC60	1P+N, 3P+N iC60









Chassis Incomer devices with connection kit *

	SAU 250		SAU 400
	Standard chassis	Phase Neutral	Standard chassis
	3P	4P or 3P+N	3P
Compact NSX			
Compact INS	 Upto 250A direct connection		 400CK2*  Upto 400A with chassis connection kit ref 400CK2*

*For chassis with incomers not listed in table, contact customer care

Accessories

Reference	Description
400CK2	Chassis Connection kit for SAU400 chassis with INS400/NSX400
LV429516	Short (incoming) terminal shield for ComPact NSX100/160/250
LV429518	Long (incoming) terminal shield for ComPact NSX100/160/250
SAU250TAGCOVER	Busbar Incoming terminal shroud and tag kit for SAU250 and SAU400 chassis
SAUTOFFCAP18	18mm insulation boots for tee-offs, set of 300 pcs for SAU250 and SAU400 chassis
SAUTOFFCAP27	27mm insulation boots for tee-offs, set of 500 pcs for SAU250 and SAU400 chassis
SEA9BP	Blank terminal block 1P (no electrical connection)
SEA9TB1001	Terminal block - 100 A - 1P
SEA9TB1254	Terminal block - 125 A - 4P


400CK2



SEA9TB1254

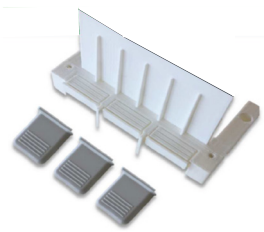
SAU250TAGCOVER


LV429516


SEA9BP

Dimension (mm)

Top or Bottom Feed



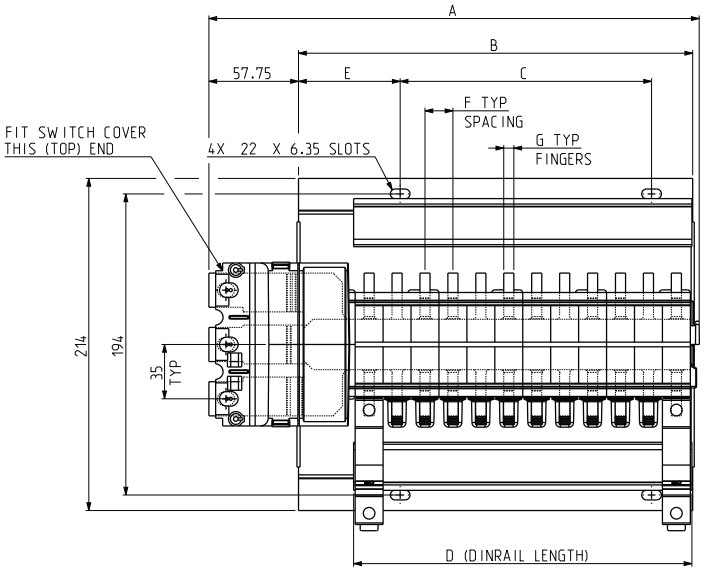

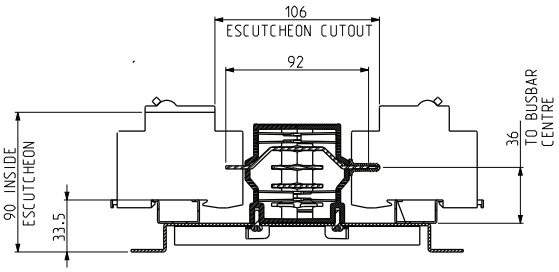

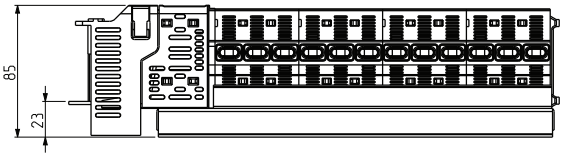

Dual Feed



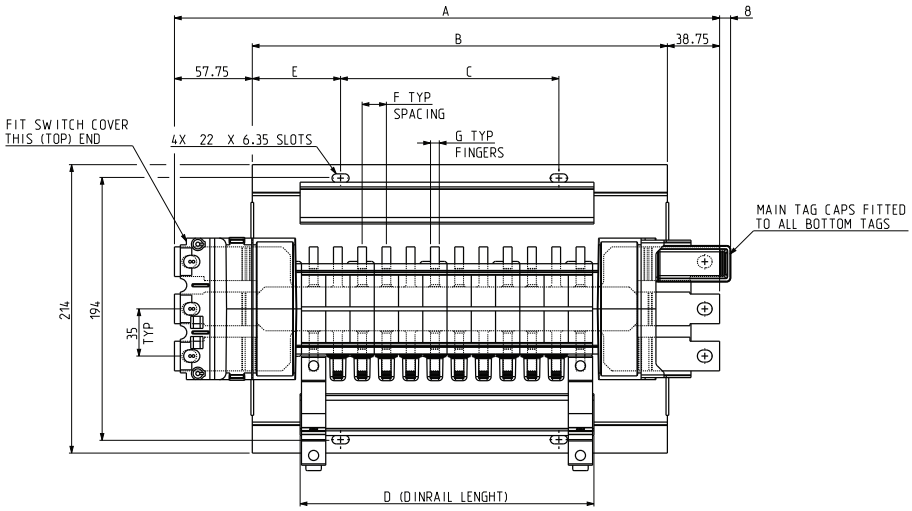

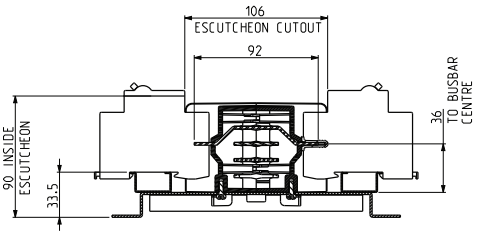

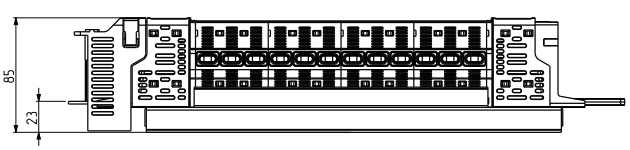

Escutcheon cut out for Encapsulated Chassis

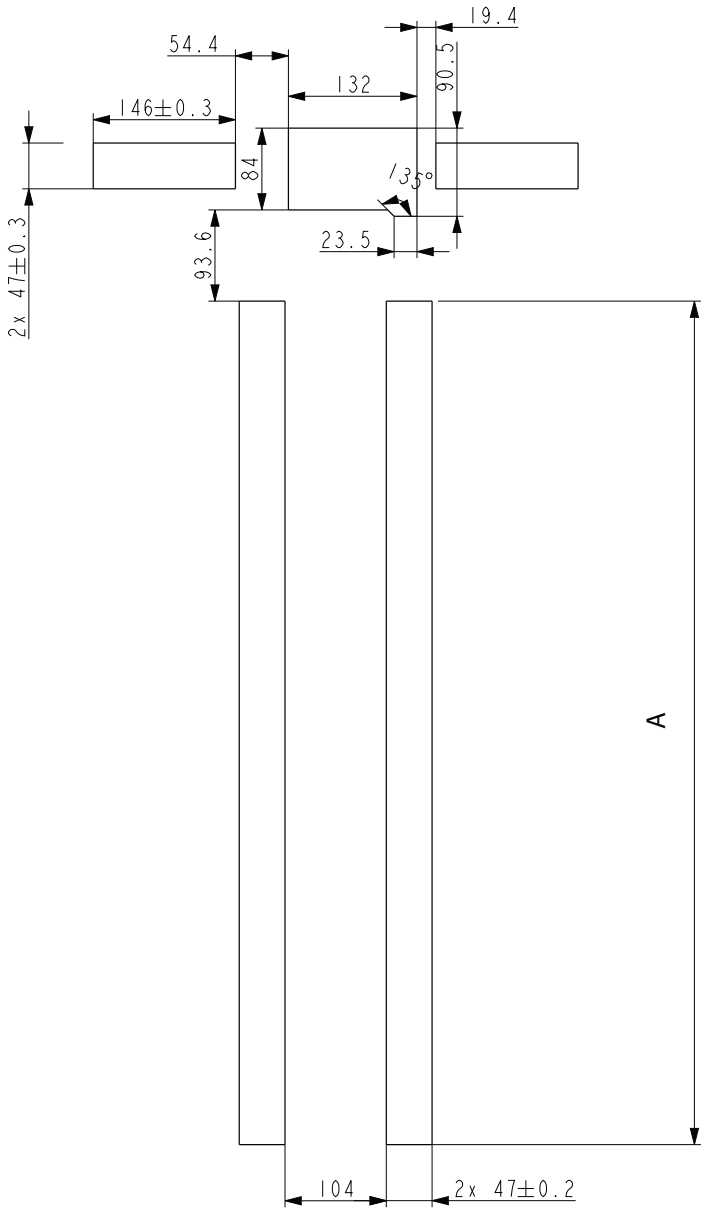

Dimensions details	
Pole size	Dimensiones A
12	110
18	164
24	218
30	272
36	326
42	380
48	434
60	542
72	650
84	758
96	866
108	974

Note:

The Escutcheon drawing is common for all variants of Encapsulated chassis. Refer to the table to find the dimension A.

Top or Bottom Feed

Reference Number	Number of Poles	A	B	C	D	E	F	G
SAU25012183	12	202	144	54	108	65.5	18	6.5
SAU25018183	18	256	198	108	162			
SAU25024183	24	310	252	162	216			
SAU25030183	30	364	306	216	270			
SAU25036183	36	418	360	270	324			
SAU25042183	42	472	414	324	378			
SAU25048183	48	526	468	378	432			
SAU25060183	60	634	576	486	540			
SAU25072183	72	742	684	594	648			
SAU25084183	84	850	792	702	756			
SAU25096183	96	958	900	810	864			
SAU250108183	108	1066	1008	918	972			

Dual Feed

Reference Number	Number of Poles	A	B	C	D	E	F	G
SAU25012183DF	12	296.5	194	54	108	65.5	18	6.5
SAU25018183DF	18	350.5	248	108	162			
SAU25024183DF	24	404.5	302	162	216			
SAU25030183DF	30	458.5	356	216	270			
SAU25036183DF	36	512.5	410	270	324			
SAU25042183DF	42	566.5	464	324	378			
SAU25048183DF	48	620.5	518	378	432			
SAU25060183DF	60	728.5	626	486	540			
SAU25072183DF	72	836.5	734	594	648			
SAU25084183DF	84	944.5	842	702	756			
SAU25096183DF	96	1052.5	950	810	864			
SAU250108183DF	108	1160.5	1058	918	972			

Reference Number	Number of Poles	A	B	C	D	E	F	G
SAU40012183	12	202	144	54	108	65.5	18	6.5
SAU40018183	18	256	198	108	162			
SAU40024183	24	310	252	162	216			
SAU40036183	36	418	360	270	324			
SAU40048183	48	526	468	378	432			
SAU40060183	60	634	576	486	540			
SAU40072183	72	742	684	594	648			
SAU40084183	84	850	792	702	756			
SAU40096183	96	958	900	810	864			

Reference Number	Number of Poles	A	B	C	D	E	F	G
SAU40012183DF	12	296.5	194	54	108	65.5	18	6.5
SAU40018183DF	18	350.5	248	108	162			
SAU40024183DF	24	404.5	302	162	216			
SAU40036183DF	36	512.5	410	270	324			
SAU40048183DF	48	620.5	518	378	432			
SAU40060183DF	60	728.5	626	486	540			
SAU40072183DF	72	836.5	734	594	648			
SAU40084183DF	84	944.5	842	702	756			
SAU40096183DF	96	1052.5	950	810	864			

Reference Number	Number of Poles	A	B	C	D	E	F	G
SAU40012273	12	256	198	108	162	65.5	27	10
SAU40018273	18	337	279	189	243			
SAU40024273	24	418	360	270	324			
SAU40036273	36	580	522	432	486			
SAU40048273	48	742	684	594	648			
SAU40060273	60	904	846	756	810			
SAU40072273	72	1066	1008	918	972			

Reference Number	Number of Poles	A	B	C	D	E	F	G
SAU40012273DF	12	350.5	248	108	162	65.5	27	10
SAU40018273DF	18	431.5	329	189	243			
SAU40024273DF	24	512.5	410	270	324			
SAU40036273DF	36	674.5	572	432	486			
SAU40048273DF	48	836.5	734	594	648			
SAU40060273DF	60	998.5	896	756	810			
SAU40072273DF	72	1160.5	1058	918	972			

Reference Number	Number of Poles	A	B	C	D	E	F	G
SAU2501641N	16	238	180	90	144	65.5	18	6.5
SAU2502441N	24	310	252	162	216			
SAU2503241N	32	382	324	234	288			
SAU2504041N	40	454	396	306	360			
SAU2504841N	48	526	468	378	432			
SAU2505641N	56	598	540	450	504			
SAU2506441N	64	670	612	522	576			
SAU2507241N	72	742	684	594	648			

Reference Number	Number of Poles	A	B	C	D	E	F	G
SAU2501641NDF	16	332.5	230	108	144	65.5	18	6.5
SAU2502441NDF	24	404.5	302	162	216			
SAU2503241NDF	32	476.5	374	216	288			
SAU2504041NDF	40	548.5	446	270	360			
SAU2504841NDF	48	620.5	518	351	432			
SAU2505641NDF	56	692.5	590	432	504			
SAU2506441NDF	64	764.5	662	513	576			
SAU2507241NDF	72	836.5	734	594	648			

Top or Bottom Feed

Reference Number	Number of Poles	A	B	C	D	E	F	G
SAU2500843N	8	166	108	54	72	65.5	18	6.5
SAU2501643N	16	238	180	108	144			
SAU2502443N	24	310	252	162	216			
SAU2503243N	32	382	324	216	288			
SAU2504043N	40	454	396	270	360			
SAU2505643N	56	598	540	432	504			
SAU2506443N	64	670	612	513	576			
SAU2507243N	72	742	684	594	648			

Reference Number	Number of Poles		A	B	C	D	E	F	G
	27 mm	18 mm							
SAU400H183	6	12	283	225	135	189	65.5	27 & 18	10 & 6.5
SAU400H303	6	24	391	333	243	297			
SAU400H423	12	30	526	468	378	432			
SAU400H483	12	36	580	522	432	486			
SAU400H723	12	60	796	738	648	702			
SAU400H843	12	72	904	846	756	810			

Dual Feed

Not available

Reference Number	Number of Poles		A	B	C	D	E	F	G
	27 mm	18 mm							
SAU400H183DF	6	12	377.5	279	135	189	65.5	27 & 18	10 & 6.5
SAU400H303DF	6	24	485.5	387	243	297			
SAU400H423DF	12	30	620.5	522	378	432			
SAU400H723DF	12	60	890.5	792	648	702			
SAU400H843DF	12	72	998.5	900	756	810			

Notes

Life Is On | Schneider Electric

Schneider Electric (NZ) Ltd.

Level 2, Building 6
60 Highbrook Drive, East Tamaki
Manukau 2013
Tel: +64 9 829 0490
Fax: +64 9 829 0491
www.se.com/nz

Customer Care

Tel: 0800 652 999
Email: customercare.nz@schneider-electric.com

03-2023
A9SAU_Chassis_NZ

© 2023 - Schneider Electric. All Rights Reserved.
All trademarks are owned by Schneider Electric Industries SAS or its affiliated companies.

This document has been printed on recycled paper