Energy meters

iEM3100 / iEM3200 / iEM3300 series

User manual

DOCA0005EN-16
05/2026

www.se.com

Legal Information

The information provided in this document contains general descriptions, technical characteristics and/or recommendations related to products/solutions.

This document is not intended as a substitute for a detailed study or operational and site-specific development or schematic plan. It is not to be used for determining suitability or reliability of the products/solutions for specific user applications. It is the duty of any such user to perform or have any professional expert of its choice (integrator, specifier or the like) perform the appropriate and comprehensive risk analysis, evaluation and testing of the products/solutions with respect to the relevant specific application or use thereof.

The Schneider Electric brand and any trademarks of Schneider Electric and its subsidiaries referred to in this document are the property of Schneider Electric or its subsidiaries. All other brands may be trademarks of their respective owner.

This document and its content are protected under applicable copyright laws and provided for informative use only. No part of this document may be reproduced or transmitted in any form or by any means (electronic, mechanical, photocopying, recording, or otherwise), for any purpose, without the prior written permission of Schneider Electric.

Schneider Electric does not grant any right or license for commercial use of the document or its content, except for a non-exclusive and personal license to consult it on an "as is" basis.

Electrical equipment should be installed, operated, serviced, and maintained only by qualified personnel. No responsibility is assumed by Schneider Electric for any consequences arising out of the use of this material.

Schneider Electric reserves the right to make changes or updates with respect to or in the content of this document or the format thereof, at any time without notice.

To the extent permitted by applicable law, no responsibility or liability is assumed by Schneider Electric and its subsidiaries for any errors or omissions in the informational content of this document, as well as any non-intended use or misuse of the content thereof.

Safety information

Important information

Read these instructions carefully and look at the equipment to become familiar with the device before trying to install, operate, service, or maintain it. The following special messages may appear throughout this manual or on the equipment to warn of potential hazards or to call attention to information that clarifies or simplifies a procedure.

The addition of either symbol to a “Danger” or “Warning” safety label indicates that an electrical hazard exists which will result in personal injury if the instructions are not followed.

This is the safety alert symbol. It is used to alert you to potential personal injury hazards. Obey all safety messages that accompany this symbol to avoid injury or death.

⚠⚠DANGER

DANGER indicates a hazardous situation which, if not avoided, **will result in** death or serious injury.

Failure to follow these instructions will result in death or serious injury.

⚠WARNING

WARNING indicates a hazardous situation which, if not avoided, **could result in** death or serious injury.

⚠CAUTION

CAUTION indicates a hazardous situation which, if not avoided, **could result in** minor or moderate injury.

NOTICE

NOTICE is used to address practices not related to physical injury.

Please note

Electrical equipment should be installed, operated, serviced, and maintained only by qualified personnel. No responsibility is assumed by Schneider Electric for any consequences arising out of the use of this equipment. A qualified person is one who has skills and knowledge related to the construction, installation, and operation of electrical equipment and has received safety training to recognize and avoid the hazards involved.

Notices

FCC

This equipment has been tested and found to comply with the limits for a Class B digital device, pursuant to part 15 of the FCC rules. These limits are designed to provide reasonable protection against harmful interference in a residential installation. This equipment generates, uses, and can radiate radio frequency energy and, if not installed and used in accordance with the instructions, may cause harmful interference to radio communications. However, there is no guarantee that the interference will not occur in a particular installation. If this equipment does cause harmful interference to radio or television reception, which can be determined by turning the equipment off and on, the user is encouraged to try to correct the interference by one or more of the following measures:

- Reorient or relocate the receiving antenna.
- Increase the separation between the equipment and receiver.
- Connect the equipment to an outlet on a circuit different from that to which the receiver is connected.
- Consult the dealer or an experienced radio/TV technician for help.

The user is cautioned that any changes or modifications not expressly approved by Schneider Electric could void the user's authority to operate the equipment.

This digital apparatus complies with CAN ICES-3 (B) /NMB-3(B).

About the document

Document scope

This manual describes the features of the iEM3100 / iEM3200 / iEM3300 series power meters and provides installation and configuration instructions.

Throughout the manual, the term “meter”, “device”, “equipment” or “product” refers to all models of the iEM3100 / iEM3200 / iEM3300. Any differences between the models, such as a feature specific to one model, are indicated with the appropriate model number or description.

This manual assumes that you understand power metering and are familiar with the equipment and power system in which your meter is installed.

This manual does not provide configuration information for advanced features where an expert user would perform advanced configuration. It also does not include instructions on incorporating meter data or performing meter configuration using energy management systems or software, except for ION Setup. ION Setup is a free configuration tool available for download from www.se.com.

Validity note

The characteristics of the products described in this document are intended to match the characteristics that are available on www.se.com. As part of our corporate strategy for constant improvement, we may revise the content over time to enhance clarity and accuracy. If you see a difference between the characteristics in this document and the characteristics on www.se.com, consider www.se.com to contain the latest information.

Product related information

Refer to the chapter Safety precautions, page 13 for the product related safety messages.

General Cybersecurity Information

In recent years, the growing number of networked machines and production plants has seen a corresponding increase in the potential for cyber threats, such as unauthorized access, data breaches, and operational disruptions. You must, therefore, consider all possible cybersecurity measures to help protect assets and systems against such threats.

To help keep your Schneider Electric products secure and protected, it is in your best interest to implement the cybersecurity best practices as described in the Cybersecurity Best Practices document.

Schneider Electric provides additional information and assistance:

- Subscribe to the Schneider Electric security newsletter.
- Visit the Cybersecurity Support Portal web page to:
  - Find Security Notifications.
  - Report vulnerabilities and incidents.
- Visit the Schneider Electric Cybersecurity and Data Protection Posture web page to:
  - Learn more about cybersecurity in the Cybersecurity Academy.
  - Explore the cybersecurity services from Schneider Electric.

Product related cybersecurity information

To help reduce the threat of cyber attacks on your (equipment/devices) systems, organizations, and networks from cyber attack threats requires multi-layered cyber risk mitigation measures, early detection of incidents, and appropriate response and recovery plans when incidents occur. For more information about cybersecurity, refer to the Cybersecurity Guidelines.

⚠ WARNING

POTENTIAL COMPROMISE OF SYSTEM AVAILABILITY, INTEGRITY, AND CONFIDENTIALITY

- Change default passwords/passcodes/PIN codes to help prevent unauthorized access to device settings and information.
- Disable unused ports/services and default accounts, where possible, to minimize pathways for malicious attacks.
- Place networked devices behind multiple layers of cyber defenses (such as firewalls, network segmentation, and network intrusion detection and protection).
- Use cybersecurity best practices (for example: least privilege, separation of duties) to help prevent unauthorized exposure, loss, modification of data and logs, interruption of services, or unintended operation.

Failure to follow these instructions can result in death, serious injury, or equipment damage.

Environmental data

For product compliance and environmental information, refer to the Schneider Electric Environmental Data Program.

Available languages of the document

This document is available in these languages:

- English: DOCA0005EN
- French: DOCA0005FR
- Spanish: DOCA0005ES
- German: DOCA0005DE
- Italian: DOCA0005IT
- Portuguese: DOCA0005PT
- Russian: DOCA0005RU
- Chinese: DOCA0005ZH

Related documents

Title	Reference number
iEM3150 instruction sheet	NHA15785 / NHA20207
iEM3110 / iEM3115 / iEM3135 / iEM3155 / iEM3165 / iEM3175 instruction sheet	NHA15789 / NHA20208
iEM3250 instruction sheet	NHA15795 / NHA20211
iEM3210 / iEM3215 / iEM3235 / iEM3255 / iEM3265 / iEM3275 instruction sheet	NHA15801 / NHA20213

Title	Reference number
iEM3350 instruction sheet	HRB91204 / HRB91205
iEM3310 / iEM3335 / iEM3355 / iEM3365 / iEM3375 instruction sheet	HRB91202 / HRB91203

To find documents online, visit the Schneider Electric download center (www.se.com/ww/en/download/).

Trademarks

Schneider Electric is a trademark or registered trademark of Schneider Electric in France, the USA, and other countries.

Table of Contents

Table of Contents 9
Safety precautions 13
Meter overview 15
- Overview of meter functions 15
- Main characteristics 15
  - iEM3100 series: 63 A meters 15
  - iEM3300 series: 125 A meters 16
  - iEM3200 series: 1 A / 5 A meters 16
- Functions 17
  - iEM3100 and iEM3300 series 17
  - iEM3200 series 17
  - Typical applications 17

Cybersecurity 19
- Overview 19
- Product defense-in-depth 19
  - Physical security 19
- Hardening 19
- Reporting a security incident or vulnerability 20
- Secure disposal guidelines 20

Hardware and installation 21
- Safety precautions 21
- Dimensions 21
- Meter description 22
  - Meter overview: iEM3100 series 22
  - Meter overview: iEM3200 series 24
  - Meter overview: iEM3300 series 26
- Wiring 28
  - Power system wiring: iEM3100 / iEM3300 series 28
  - Power system wiring: iEM3200 series 29
- Input, output and communications wiring considerations 30
  - Digital input 31
  - Digital output 31
  - Modbus / BACnet RS-485 wiring: iEM3150 / iEM3155 / iEM3165 / iEM3250 / iEM3255 / iEM3265 / iEM3350 / iEM3355 / iEM3365 32
  - LonWorks / M-Bus wiring: iEM3135 / iEM3175 / iEM3235 / iEM3275 / iEM3335 / iEM3375 32
- Meter sealing points 32
- Dismounting 33
- Considerations for iEM3100 series and iEM3300 series devices associated with a contactor 33

Front panel display and meter setup 34
- Overview 34
- Data display 34
  - Data display screen overview 34
  - Example: navigating the display screens 34
  - Meter status information 35
  - Backlight and error / alert icon 35

Data display screens 35
Resets 37
Resetting accumulated energy using the display 37
Multi Tariff feature 38
Meter information 38
The device clock 38
Date/time format 39
Setting the clock initially 39
Device configuration 39
Entering configuration mode 40
The front panel display in configuration mode 40
Com. Protection setting 40
Modifying parameters 41
Selecting a value from a list 41
Modifying a numerical value 41
Cancelling an entry 42
Configuration mode menus 42
Configuration menu for iEM3110 / iEM3115 / iEM3310 43
Configuration menu for iEM3150 / iEM3350 44
Configuration menu for iEM3135 / iEM3155 / iEM3165 / iEM3175 / iEM3335 / iEM3355 / iEM3365 / iEM3375 46
Configuration menu for iEM3210 / iEM3215 48
Configuration menu for iEM3250 50
Configuration menu for iEM3235 / iEM3255 / iEM3265 / iEM3275 52
Communications using Modbus 55
Modbus communication overview 55
Modbus communications settings 55
Communications LED indicator for Modbus devices 55
Modbus functions 55
Function list 55
Table format 56
Command interface 57
Command interface overview 57
Command request 57
Command list 58
Modbus register list 62
System 62
Meter Setup and Status 62
Energy Pulse Output Setup (iEM3155 / iEM3255 / iEM3355) 63
Command Interface 63
Communication 64
Input Metering Setup (iEM3155 / iEM3255 / iEM3355) 64
Digital Input (iEM3155 / iEM3255 / iEM3355) 65
Digital Output (iEM3155 / iEM3255 / iEM3355) 65
PF firmware updates (iEM3155 / iEM3255 / iEM3355) 65
1PH4W Multi LN updates (iEM3155 / iEM3255 / iEM3355) 65
Meter Data 66
Overload Alarm (iEM3155 / iEM3255 / iEM3355) 69
Read Device Identification 69

Communications using LonWorks 71
LonWorks communications overview 71
LonWorks communication implementation 71
External interface file (XIF) 71
The LonMaker plug-ins 71
LED indicators for LonWorks meters 71
Location of the service pin and Neuron ID 72
Standard network variable types and configuration properties for reading data 72
Meter configuration properties 76
Echelon LonMaker plug-in for data display and meter configuration 80
Communications using M-Bus 82
M-Bus communications overview 82
Configuring basic communications settings 82
Key terms 82
M-Bus protocol support 83
M-Bus protocol implementation 83
M-Bus tool for viewing data and configuring the meter 83
Communications LED indicator for M-Bus meters 83
Variable data structure telegram information 84
Fixed data header 84
Decoding secondary address and M-Bus serial number 84
Data record header information 85
Telegram information for data records 87
Meter information 87
Energy and energy by tariff measurements (INT64 and FLOAT32) 88
Instantaneous measurements 89
Meter status information 89
Telegram decode information (all values are in hexadecimal) 92
Telegram information for meter configuration 103
Supported VIFE codes for meter configuration 103
Date/time setup 103
Power system setup 103
Multi Tariff setup 104
Communications setup 104
Digital input setup 105
Digital output setup 105
Overload alarm setup and acknowledgment 105
Resets 106
M-Bus tool for data display and meter configuration 106
Installing the M-Bus tool 106
Accessing the meter using the tool 107
Viewing meter data using the M-Bus tool 108
Configuring the meter using the M-Bus tool 109
Communications using BACnet 111
BACnet communications overview 111
BACnet protocol support 111
BACnet communications implementation 112
Configuring basic communication parameters 112

Communications LED indicator for BACnet meters 113
Change of Value (COV) subscriptions 113
BACnet object and property information 113
Device object 113
Analog Input objects 115
Analog value object 118
Binary input objects 118
Power, energy and power factor 120
Power (PQS) 120
Power and the PQ coordinate system 120
Power flow 120
Energy delivered (imported) / energy received (exported) 120
Power factor (PF) 121
PF lead / lag convention 121
PF sign convention 122
Power factor register format 123
Troubleshooting 125
Overview 125
Diagnosis screen 125
Diagnostic codes 125
Specifications 127
Electrical characteristics 127
Power system inputs: iEM3100 series 127
Power system inputs: iEM3300 series 127
Power system inputs: iEM3200 series 128
Inputs and outputs 128
Mechanical characteristics 129
Environmental characteristics 130
Safety, EMI/EMC and product standards 130
Measurement accuracy 130
MID/MIR 131
Internal clock 131
Modbus communications 132
LonWorks communications 132
M-Bus communications 132
BACnet communications 132
China Standard Compliance 134

Safety precautions

Installation, wiring, testing and service must be performed in accordance with all local and national electrical codes.

⚠⚠DANGER

HAZARD OF ELECTRIC SHOCK, EXPLOSION, OR ARC FLASH

- Apply appropriate Personal Protective Equipment (PPE) and follow safe electrical work practices. See NFPA 70E, CSA Z462 or other local standards.
- Turn off all power supplying this device and the equipment in which it is installed before working on or in the equipment.
- Always use a properly rated voltage sensing device to confirm that all power is off.
- Assume communications and I/O wiring are hazardous live until determined otherwise.
- Do not exceed the maximum ratings of this device.
- Do not short secondary terminals of Voltage Transformer (VT).
- Do not open secondary terminals of Current Transformer (CT).
- Ground secondary circuit of CTs.
- Do not use the data from the meter to confirm power is off.
- Replace all devices, doors, and covers before turning on power to this equipment.
- Do not install CTs or LPCTs in equipment where they exceed 75% of the wiring space of any cross-sectional area in the equipment.
- Do not install CTs or LPCTs in areas where ventilation openings may be blocked or in areas of breaker arc venting.
- Secure CT or LPCT secondary conductors to ensure they do not contact live circuits.
- Do not use water or any liquid material to clean the product. Use a cleaning cloth to remove dirt. If dirt cannot be removed, contact local Technical Support representative.
- The installer is responsible for co-ordinating the rating and the characteristics of the supply side over current protection devices with the maximum current rating.

Failure to follow these instructions will result in death or serious injury.

NOTE: See IEC 60950-1, Annex W for more information on communications and I/O wiring connected to multiple devices.

⚠WARNING

UNINTENDED OPERATION

Do not use this device for critical control or protection of persons, animals, property or equipment.

Failure to follow these instructions can result in death, serious injury, or equipment damage.

⚠ WARNING

INACCURATE DATA RESULTS

- Do not rely solely on data displayed on the display or in software to determine if this device is functioning correctly or complying with all applicable standards.
- Do not use data displayed on the display or in software as a substitute for proper workplace practices or equipment maintenance.

Failure to follow these instructions can result in death, serious injury, or equipment damage.

Meter overview

Overview of meter functions

The meters provide the essential measurement capabilities (for example, current, voltage, and energy) required to monitor a 1-phase or 3-phase electrical installation.

The key features of the meters are:

- Measurement of active and reactive energy
- Multi Tariffs (up to 4) controlled by internal clock, digital inputs or communication
- MID/MIR compliance for many of the meters
- Pulse outputs
- Display (current, voltage, and energy measurements)
- Communications via Modbus, LonWorks, M-Bus or BACnet protocols

Main characteristics

iEM3100 series: 63 A meters

Function		iEM3110	iEM3115	iEM3135	iEM3150	iEM3155	iEM3165	iEM3175
Direct measurement (up to 63 A)		√	√	√	√	√	√	√
Active Energy measurement accuracy class (total and partial kWh)		1	1	1	1	1	1	1
Four Quadrant Energy measurements		—	—	√	—	√	√	√
Electrical measurements (I, V, P, ...)		—	—	√	√	√	√	√
Multi Tariff	**Controlled by internal clock**	—	4	4	—	4	4	4
	Controlled by digital input(s)	—	4	2	—	2	2	2
	Controlled by communications	—	—	4	—	4	4	4
Measurement display (number of lines)		3	3	3	3	3	3	3
Digital inputs	**Programmable (status, tariff control, or input monitoring)**	—	—	1	—	1	1	1
	Tariff control only	—	2	—	—	—	—	—
Digital outputs	**Programmable (energy pulsing or overload alarm)**	—	—	1	—	1	1	—
	Pulse output only	1	—	—	—	—	—	—
Overload alarm		—	—	√	—	√	√	√
Communications	**Modbus**	—	—	—	√	√	—	—
	LonWorks	—	—	—	—	—	—	√
	M-Bus	—	—	√	—	—	—	—
	BACnet	—	—	—	—	—	√	—
MID/MIR compliant		√	√	√	—	√	√	√
Width (18 mm module in DIN rail mounting)		5	5	5	5	5	5	5

iEM3300 series: 125 A meters

Function		iEM3310	iEM3335	iEM3350	iEM3355	iEM3365	iEM3375
Direct measurement (up to 125 A)		√	√	√	√	√	√
Active Energy measurement accuracy class (total and partial kWh)		1	1	1	1	1	1
Four Quadrant Energy measurements		—	√	—	√	√	√
Electrical measurements (I, V, P, ...)		—	√	√	√	√	√
Multi Tariff	Controlled by internal clock	—	4	—	4	4	4
	Controlled by digital input(s)	—	2	—	2	2	2
	Controlled by communications	—	4	—	4	4	4
Measurement display (number of lines)		3	3	3	3	3	3
Digital inputs (programmable for status, tariff control, or input monitoring)		—	1	—	1	1	1
Digital outputs	Programmable (energy pulsing or overload alarm)	—	1	—	1	1	—
	Pulse output only	1	—	—	—	—	—
Overload alarm		—	√	—	√	√	√
Communications	Modbus	—	—	√	√	—	—
	LonWorks	—	—	—	—	—	√
	M-Bus	—	√	—	—	—	—
	BACnet	—	—	—	—	√	—
MID/MIR compliant		√	√	—	√	√	√
Width (18 mm module in DIN rail mounting)		7	7	7	7	7	7

iEM3200 series: 1 A / 5 A meters

Function		iEM3210	iEM3215	iEM3235	iEM3250	iEM3255	iEM3265	iEM3275
Measurement inputs through CTs (1 A, 5 A)		√	√	√	√	√	√	√
Measurement inputs through VTs		—	—	√	√	√	√	√
1 A: Active Energy measurement accuracy class (total and partial kWh)		1	1	1	1	1	1	1
5 A: Active Energy measurement accuracy class (total and partial kWh)		0.5S	0.5S	0.5S	0.5S	0.5S	0.5S	0.5S
Four Quadrant Energy measurements		—	—	√	—	√	√	√
Electrical measurements (I, V, P, ...)		—	—	√	√	√	√	√
Multi Tariff	Controlled by internal clock	—	4	4	—	4	4	4
	Controlled by digital input(s)	—	4	2	—	2	2	2
	Controlled by communications	—	—	4	—	4	4	4
Measurement display (number of lines)		3	3	3	3	3	3	3
Digital inputs	Programmable (status, tariff control, or input monitoring)	—	—	1	—	1	1	1
	Tariff control only	—	2	—	—	—	—	—
Digital outputs	Programmable (energy pulsing or overload alarm)	—	—	1	—	1	1	—

Function		iEM3210	iEM3215	iEM3235	iEM3250	iEM3255	iEM3265	iEM3275
	Pulse output only	1	—	—	—	—	—	—
Overload alarm		—	—	√	—	√	√	√
Communications	**Modbus**	—	—	—	√	√	—	—
	LonWorks	—	—	—	—	—	—	√
	M-Bus	—	—	√	—	—	—	—
	BACnet	—	—	—	—	—	√	—
MID/MIR compliant		√	√	√	—	√	√	√
Width (18 mm module in DIN rail mounting)		5	5	5	5	5	5	5

Functions

These meters can monitor energy consumption by usage, by zone or by feeder in the cabinet. They can be used to monitor feeders in a main switchboard or to monitor the main in a distribution cabinet.

iEM3100 and iEM3300 series

Functions	Advantages
Can directly measure feeders up to: iEM3100 series: 63 A iEM3300 series: 125 A Embedded current transformers (CTs)	Saves installation time and space in the cabinet No wiring to manage Clear distribution network
Adapted to be installed with Acti9 iC60 (iEM3100 series) or Acti9 C120, NG125 (iEM3300 series) circuit breakers	Can be used in three-phase systems with or without neutral
Can be used for single-phase multi-circuit monitoring	3 single feeders can be monitored with a single meter

iEM3200 series

Functions	Advantages
CT and VT connection	Can be used in low or medium voltage applications
Flexible configuration	Can be adapted to any distribution network with or without neutral

Typical applications

The following table presents some of the functions of the different meters, the advantages and main applications.

Functions	Advantages	Applications	Meter
Total and partial energy counters	Energy usage monitoring	Sub-billing management Metering applications	iEM3100 / iEM3200 / iEM3300 series
Internal clock	Saves the date and time of last reset	Provides the timestamp of the last reset of the partial energy accumulation	All

Functions	Advantages	Applications	Meter
Pulse output with a configurable pulse weight of up to 1 pulse per 1 Wh	Collect pulses from the meter with a Smartlink system, PLC or any basic acquisition system	Remote monitoring of energy consumption Integrate the meter in to a system monitoring of a large number of devices	iEM3110 / iEM3210 / iEM3310
Manages up to four tariffs, controlled by the digital input(s), internal clock or communications (depending on meter model)	Categorize energy consumption into On Peak and Off Peak, working days and weekends, or by different electricity sources (for example, from the utility and an electrical generator)	Energy demand management Sub-billing management Identification of local energy consumption behavior by zone, by usage or by feeder	iEM3115 / iEM3135 / iEM3155 / iEM3165 / iEM3175 / iEM3215 / iEM3235 / iEM3255 / iEM3265 / iEM3275 / iEM3335 / iEM3355 / iEM3365 / iEM3375
Measures essential electrical parameters like current, average voltage and total power	Instantaneous measurements help you monitor the imbalance between phases Total power allows you to monitor the feeder load level	Monitoring of feeders or any sub-cabinet	iEM3100 / iEM3200 / iEM3300 series
M-Bus communications	Communicate advanced parameters using M-Bus protocol	M-Bus network integration	iEM3135 / iEM3235 / iEM3335
Modbus communications	Communicate advanced parameters using Modbus protocol	Modbus network integration	iEM3150 / iEM3155 / iEM3250 / iEM3255 / iEM3350 / iEM3355
BACnet communications	Communicate advanced parameters using BACnet MS/TP protocol	BACnet network integration	iEM3165 / iEM3265 / iEM3365
LonWorks communications	Communicate advanced parameters using LonWorks communications	LonWorks network integration	iEM3175 / iEM3275 / iEM3375
Four quadrant calculation	Identification of imported and exported active and reactive energy allows you to monitor energy flow in both directions: delivered from the utility and produced on-site	Ideal for facilities with back-up generators or green power capabilities (for example, solar panels or wind turbines)	iEM3135 / iEM3155 / iEM3165 / iEM3175 / iEM3235 / iEM3255 / iEM3265 / iEM3275 / iEM3335 / iEM3355 / iEM3365 / iEM3375
Measurement of active energy	Allows you to monitor energy consumption and production	Manage energy consumption and make informed investment to reduce your energy bill or penalties (for example, installing capacitor banks)	iEM3100 / iEM3200 / iEM3300 series
Measurement of reactive energy	Allows you to monitor energy consumption and production	Manage energy consumption and make informed investment to reduce your energy bill or penalties (for example, installing capacitor banks)	iEM3135 / iEM3155 / iEM3165 / iEM3175 / iEM3235 / iEM3255 / iEM3265 / iEM3275 / iEM3335 / iEM3355 / iEM3365 / iEM3375
Programmable digital input	Can be programmed to: • Count pulses from other meters (gas, water, etc.) • Monitor an external status • Reset the partial energy accumulation and start a new period of accumulation	This allows for monitoring of: • WAGES • Intrusion (for example, doors opening) or equipment status • Energy usage	iEM3135 / iEM3155 / iEM3165 / iEM3175 / iEM3235 / iEM3255 / iEM3265 / iEM3275 / iEM3335 / iEM3355 / iEM3365 / iEM3375
Programmable digital output	Can be programmed to: • Be an active energy (kWh) pulse output, with a configurable pulse weight • Alarm on a power overload at a configurable pickup setpoint	This allows you to: • Collect pulses from the meter with a Smartlink system, PLC or any basic acquisition system • Monitor power levels at a detailed level and to help detect an overload before the circuit breaker trips	iEM3135 / iEM3155 / iEM3165 / iEM3235 / iEM3255 / iEM3265 / iEM3335 / iEM3355 / iEM3365

Cybersecurity

Overview

Modbus is an unencrypted communication protocol. RS-485 cannot transmit encrypted data using communication protocol.

⚠ WARNING

POTENTIAL COMPROMISE OF SYSTEM AVAILABILITY, INTEGRITY, AND CONFIDENTIALITY

Unauthorized access to the network by a malicious user could lead to the disclosure or tampering of transmitted information.

Failure to follow these instructions can result in death, serious injury, or equipment damage.

To avoid malicious use of the sensitive information that will be transmitted through an internal network, follow the instructions:

- Segment the network physically or logically..
- Restrict access to the network using standard controls such as firewalls.
- For transmitting data over an external network, encrypt protocol transmissions over all external connections using an encrypted tunnel, TLS wrapper or a similar solution.

Product defense-in-depth

Use a layered network approach with multiple security and defense controls in your IT and control system to minimize data protection gaps, helps reduce single-point-of-failure and create a strong cybersecurity posture. The more layers of security in your network, the harder it is to breach defenses, take digital assets or cause disruption.

Place the device behind a secure firewall to protect against unauthorized access and potential cyber threats.

Physical security

Multiple anti-tamper sealing points are used to help prevent access and leaves evidence of tampering.

Hardening

Recommendations to optimize cybersecurity in a protected environment:

- Harden the device according to your company policies and standards.
- Review assumptions about protected environments and address potential risks and mitigation strategies.
- Least functionality can be applied to prohibit and restrict the use of unnecessary functions, protocols and/or services.
- Change the communication protocol ports from their default values. This lowers the predictability of port use.
- Disable communication protocol ports when they are not in use. This reduces the attack surface.

Reporting a security incident or vulnerability

To report suspicious activity or a cybersecurity incident, go to the Schneider Electric Report an Incident website.

To report a security vulnerability affecting your product or solution, go to the Schneider Electric Report a Vulnerability website.

Secure disposal guidelines

Use the *Secure disposal checklist* when disposing a device to help prevent potential disclosure of data.

Hardware and installation

Safety precautions

Installation, wiring, testing and service must be performed in accordance with all local and national electrical codes.

⚠⚠DANGER

HAZARD OF ELECTRIC SHOCK, EXPLOSION, OR ARC FLASH

- Apply appropriate Personal Protective Equipment (PPE) and follow safe electrical work practices. See NFPA 70E, CSA Z462 or other local standards.
- Turn off all power supplying this device and the equipment in which it is installed before working on or in the equipment.
- Always use a properly rated voltage sensing device to confirm that all power is off.
- Replace all devices, doors, and covers before turning on power to this equipment.
- Do not exceed the maximum ratings of this device.
- Do not touch the current terminal when the meter is energized.

Failure to follow these instructions will result in death or serious injury.

Dimensions

iEM3100 series

NOTE: Dimensions are in mm/in.

A	Without communications
B	With communications

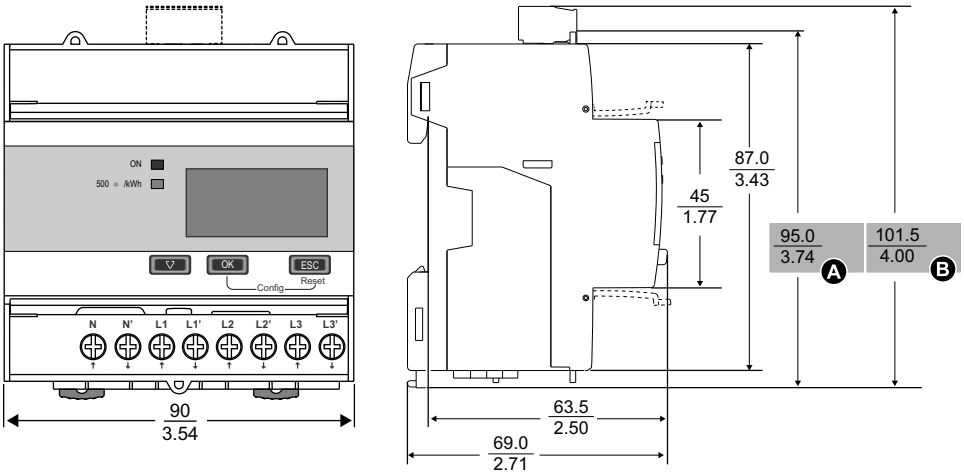

iEM3200 series

NOTE: Dimensions are in mm/in.

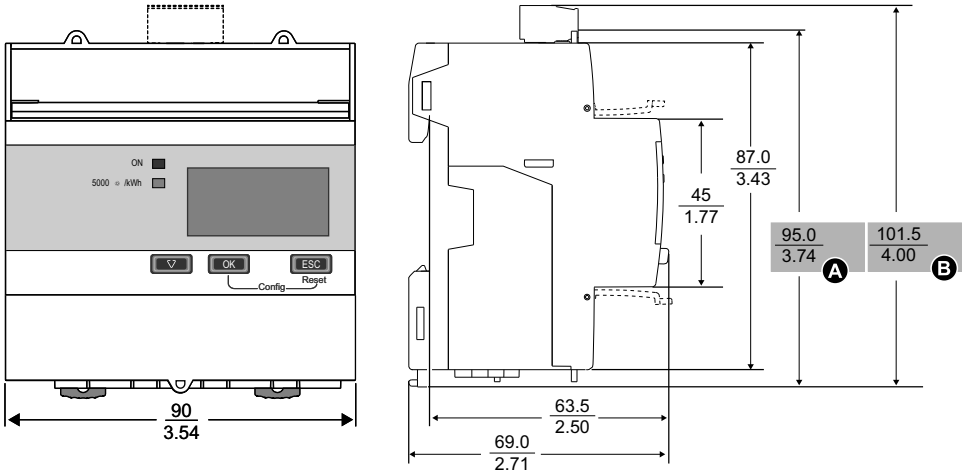

A	Without communications
B	With communications

iEM3300 series

NOTE: Dimensions are in mm/in.

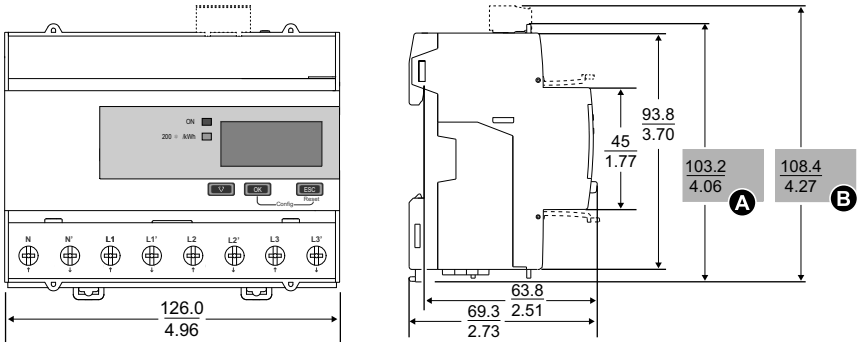

A	Without communications
B	With communications

Meter description

Meter overview: iEM3100 series

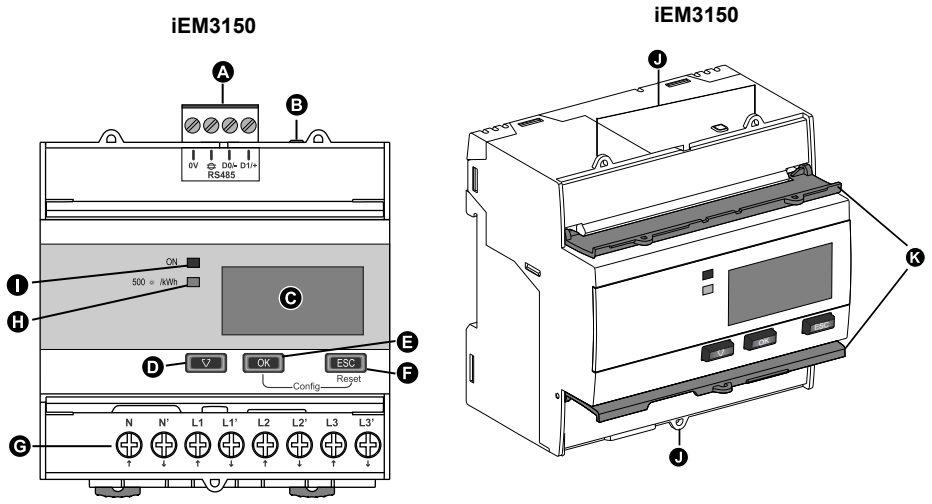

A	Modbus communication port (iEM3150)
B	Modbus communication LED (iEM3150)
C	Display with white backlight for measurement and configuration
D	Scroll through screens or a list of options
E	Confirm entry or access more screens
F	Cancel and go back to previous screen
G	L1, L2, L3, N
H	Energy pulse LED

I	Status LED: on / off / error
J	Sealing points (3)
K	Sealable covers (2)

NOTE: The sealable covers must be installed and sealed to the sealing points with the steel cable. Use steel cable with 1.6 mm (1/16 in) diameter and 152.4 mm (6 in) adjustable length for sealing.

iEM3135 / iEM3155 / iEM3165

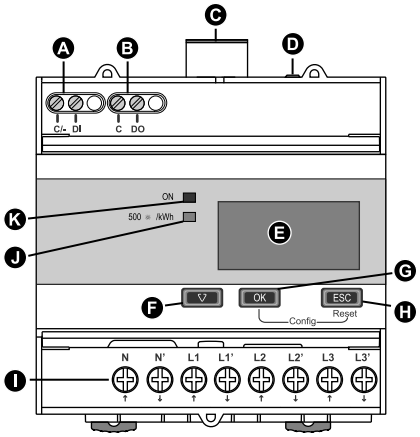

iEM3175

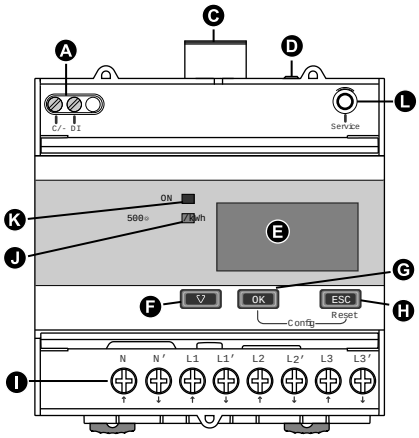

iEM3115

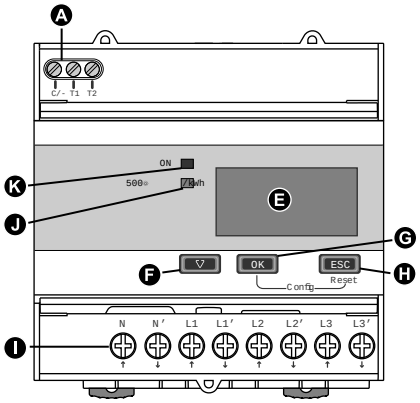

iEM3110

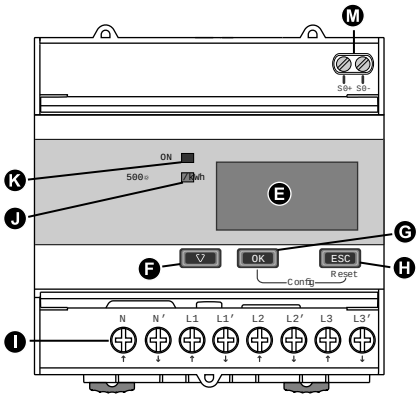

iEM3110 / iEM3115 / iEM3135 / iEM3155 / iEM3165 / iEM3175

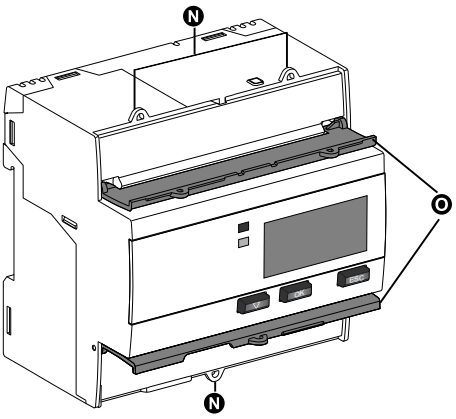

A	Digital input (iEM3115 / iEM3135 / iEM3155 / iEM3165 / iEM3175)
B	Digital output (iEM3135 / iEM3155 / iEM3165)
C	M-Bus communication port (iEM3135) Modbus communication port (iEM3155 / iEM3165) LonWorks communication port (iEM3175)
D	M-Bus communication LED (iEM3135) Modbus communication LED (iEM3155 / iEM3165) LonWorks communication LED (iEM3175)
E	Display with white backlight for measurement and configuration
F	Scroll through screens or a list of options
G	Confirm entry or access more screens
H	Cancel and go back to previous screen
I	L1, L2, L3, N
J	Energy pulse LED
K	Status LED: on / off / error
L	LonWorks service pin (iEM3175)
M	Pulse output (iEM3110)
N	Sealing points (3)
O	Sealable covers (2)

NOTE: The sealable covers must be installed and sealed to the sealing points with the steel cable. Use steel cable with 1.6 mm (1/16 in) diameter and 152.4 mm (6 in) adjustable length for sealing.

Meter overview: iEM3200 series

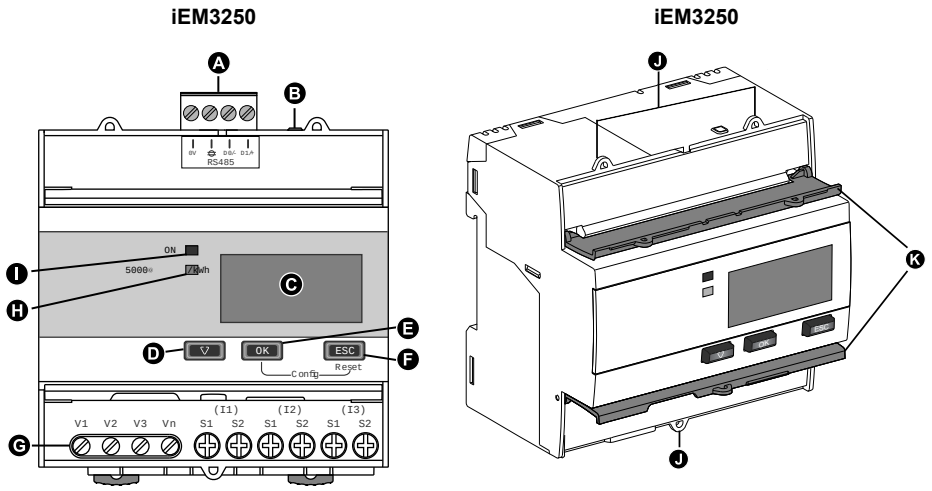

A	Modbus communication port
B	Modbus communication LED
C	Display with white backlight for measurement and configuration
D	Scroll through screens or a list of options
E	Confirm entry or access more screens
F	Cancel and go back to previous screen
G	V1, V2, V3, Vn, I1, I2, I3
H	Energy pulse LED
I	Status LED: on / off / error
J	Sealing points (3)
K	Sealable covers (2)

NOTE: The sealable covers must be installed and sealed to the sealing points with the steel cable. Use steel cable with 1.6 mm (1/16 in) diameter and 152.4 mm (6 in) adjustable length for sealing.

iEM3235 / iEM3255 / iEM3265

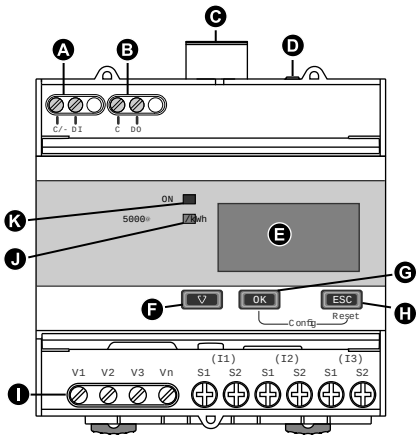

iEM3275

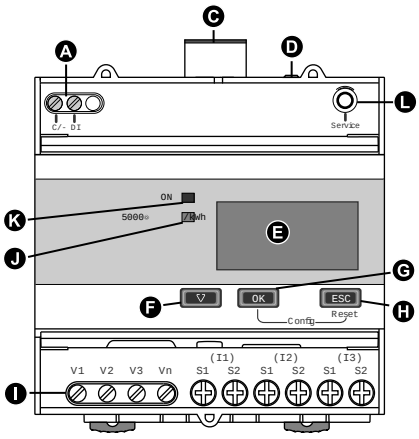

iEM3215

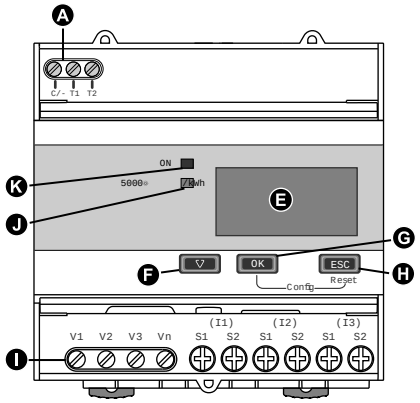

iEM3210

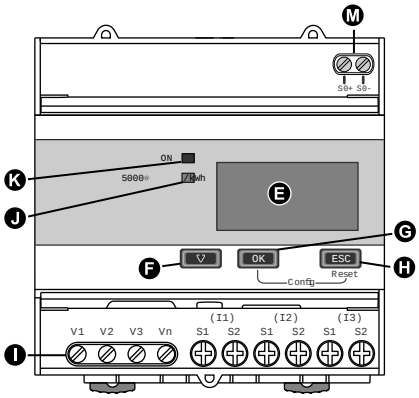

iEM3210 / iEM3215 / iEM3235 / iEM3255 / iEM3265 / iEM3275

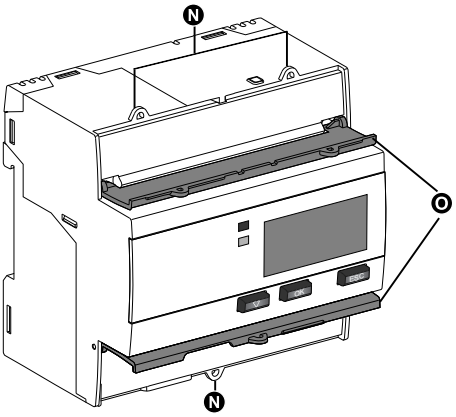

A	Digital input (iEM3215 / iEM3235 / iEM3255 / iEM3265 / iEM3275)
B	Digital output (iEM3235 / iEM3255 / iEM3265)
C	M-Bus communication port (iEM3235) Modbus communication port (iEM3255 / iEM3265) LonWorks communication port (iEM3275)
D	M-Bus communication LED (iEM3235) Modbus communication LED (iEM3255 / iEM3265) LonWorks communication LED (iEM3275)
E	Display with white backlight for measurement and configuration
F	Scroll through screens or a list of options
G	Confirm entry or access more screens
H	Cancel and go back to previous screen
I	V1, V2, V3, Vn, I1, I2, I3
J	Energy pulse LED
K	Status LED: on / off / error
L	LonWorks service pin (iEM3275)
M	Pulse output (iEM3210)
N	Sealing points (3)
O	Sealable covers (2)

NOTE: The sealable covers must be installed and sealed to the sealing points with the steel cable. Use steel cable with 1.6 mm (1/16 in) diameter and 152.4 mm (6 in) adjustable length for sealing.

Meter overview: iEM3300 series

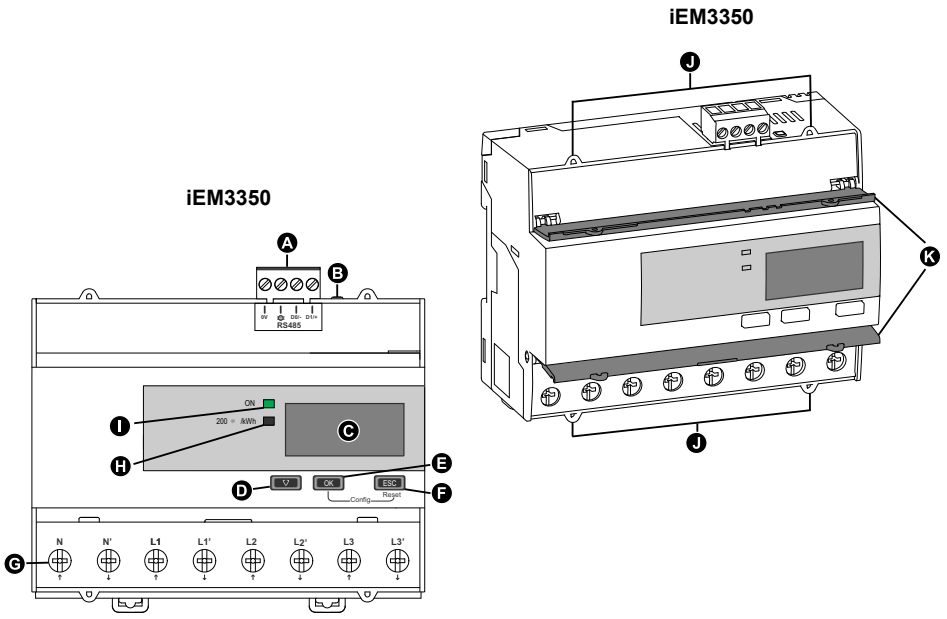

A	Modbus communication port
B	Modbus communication LED
C	Display with white backlight for measurement and configuration
D	Scroll through screens or a list of options
E	Confirm entry or access more screens
F	Cancel and go back to previous screen
G	L1, L2, L3, N
H	Energy pulse LED
I	Status LED: on / off / error
J	Sealing points (4)
K	Sealable covers (2)

NOTE: The sealable covers must be installed and sealed to the sealing points with the steel cable. Use steel cable with 1.6 mm (1/16 in) diameter and 152.4 mm (6 in) adjustable length for sealing.

iEM3335 / iEM3355 / iEM3365

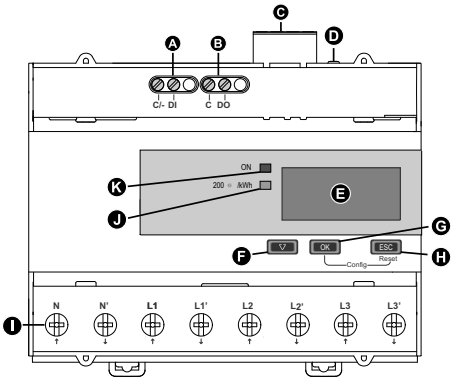

iEM3375

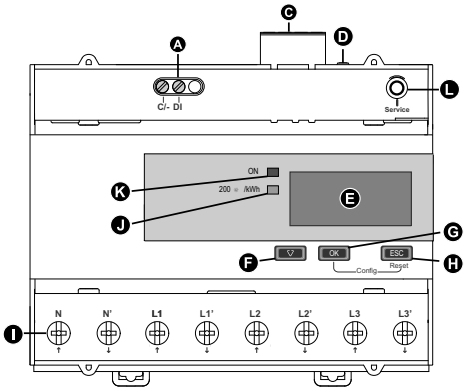

iEM3310

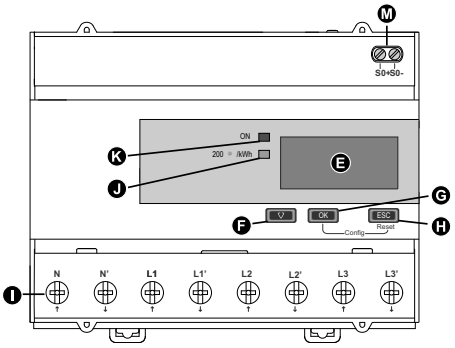

iEM3335 / iEM3355 / iEM3365 / iEM3375 / iEM3310

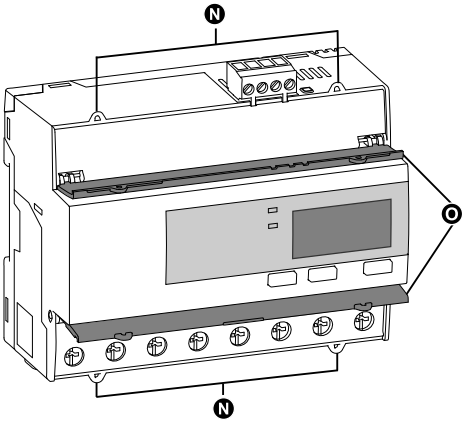

A	Digital input (iEM3335 / iEM3355 / iEM3365 / iEM3375)
B	Digital output (iEM3335 / iEM3355 / iEM3365)
C	M-Bus communication port (iEM3335) Modbus communication port (iEM3355 / iEM3365) LonWorks communication port (iEM3375)
D	M-Bus communication LED (iEM3335) Modbus communication LED (iEM3355 / iEM3365) LonWorks communication LED (iEM3375)
E	Display with white backlight for measurement and configuration
F	Scroll through screens or a list of options
G	Confirm entry or access more screens
H	Cancel and go back to previous screen
I	L1, L2, L3, N
J	Energy pulse LED
K	Status LED: on / off / error
L	LonWorks service pin (iEM3375)
M	Pulse output (iEM3310)
N	Sealing points (4)
O	Sealable covers (2)

NOTE: The sealable covers must be installed and sealed to the sealing points with the steel cable. Use steel cable with 1.6 mm (1/16 in) diameter and 152.4 mm (6 in) adjustable length for sealing.

Wiring

Power system wiring: iEM3100 / iEM3300 series

⚠⚠ DANGER

HAZARD OF ELECTRIC SHOCK, EXPLOSION, OR ARC FLASH

Do not connect N' to the load when setting the wiring type on the meter to 1PH4W Multi L-N.

Failure to follow these instructions will result in death or serious injury.

1PH2W LN

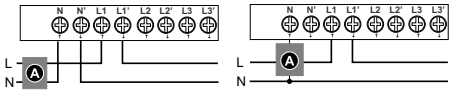

1PH2W LL

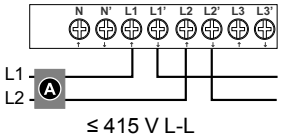

1PH3W LLN

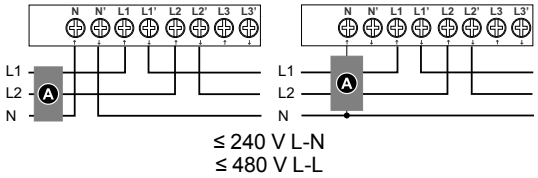

1PH multiple load with N

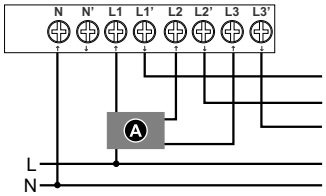

3PH3W

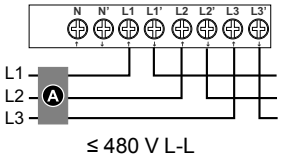

3PH4W

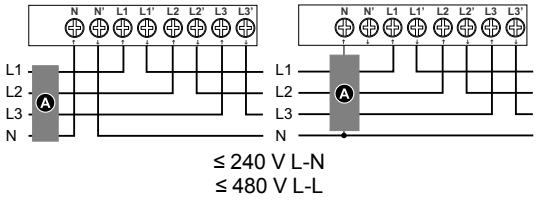

Ⓐ Fuses and disconnect switch

Clearly label the device's disconnect circuit mechanism and install it within easy reach of the operator.

Fuses / circuit breakers must be:

- Installed in accordance with all local and national electrical codes and standards.
- Rated for the installation voltage, available fault current, and sized for connected loads.

Fuse for neutral is required if the source neutral is not grounded.

Power system wiring: iEM3200 series

1PH

1PH2W L-N

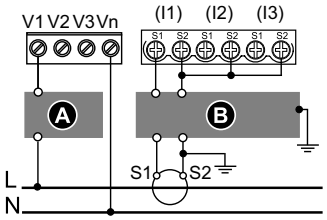

≤ 240 V L-N

1PH2W L-L

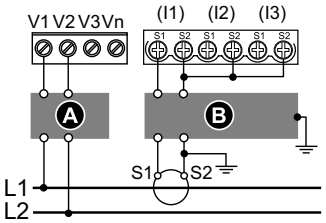

≤ 415 V L-L

1PH3W L-L-N

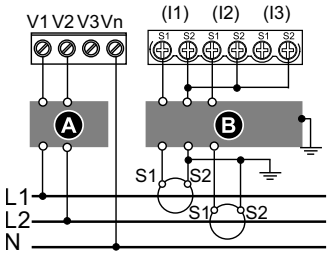

≤ 240 V L-N
≤ 480 V L-L

1PH4W multi L-N 2CT

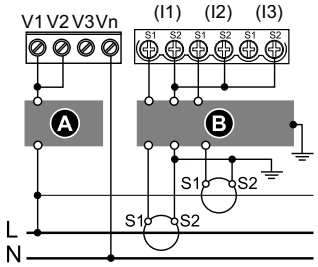

≤ 240 V L-N

1PH4W multi L-N 3CT

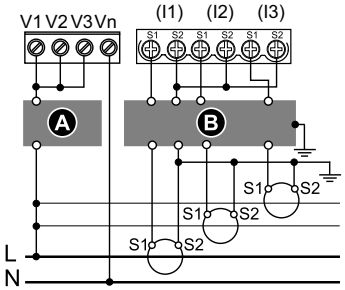

≤ 240 V L-N

3PH3W

1CT ♦

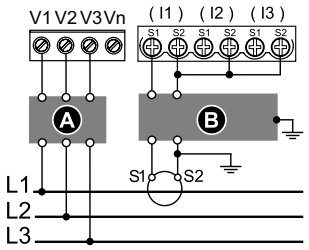

≤ 480 V L-L

2CT

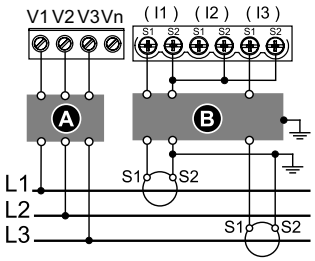

≤ 480 V L-L

3CT

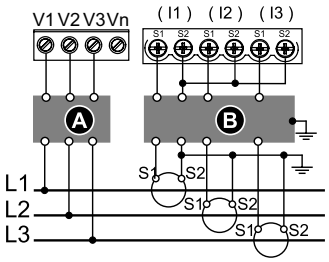

≤ 480 V L-L

3PH4W

1CT ♦

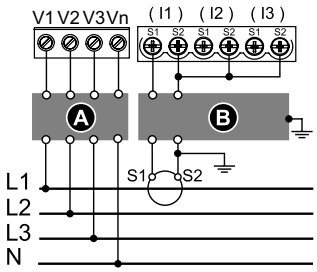

≤ 277 V L-N
≤ 480 V L-L

2CT ♦

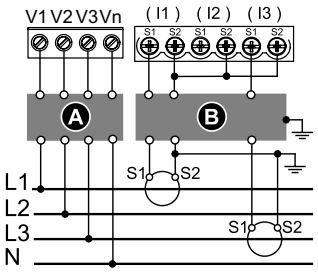

≤ 277 V L-N
≤ 480 V L-L

3CT

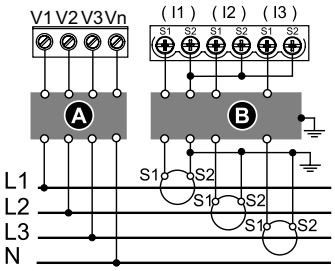

≤ 277 V L-N
≤ 480 V L-L

3PH3W

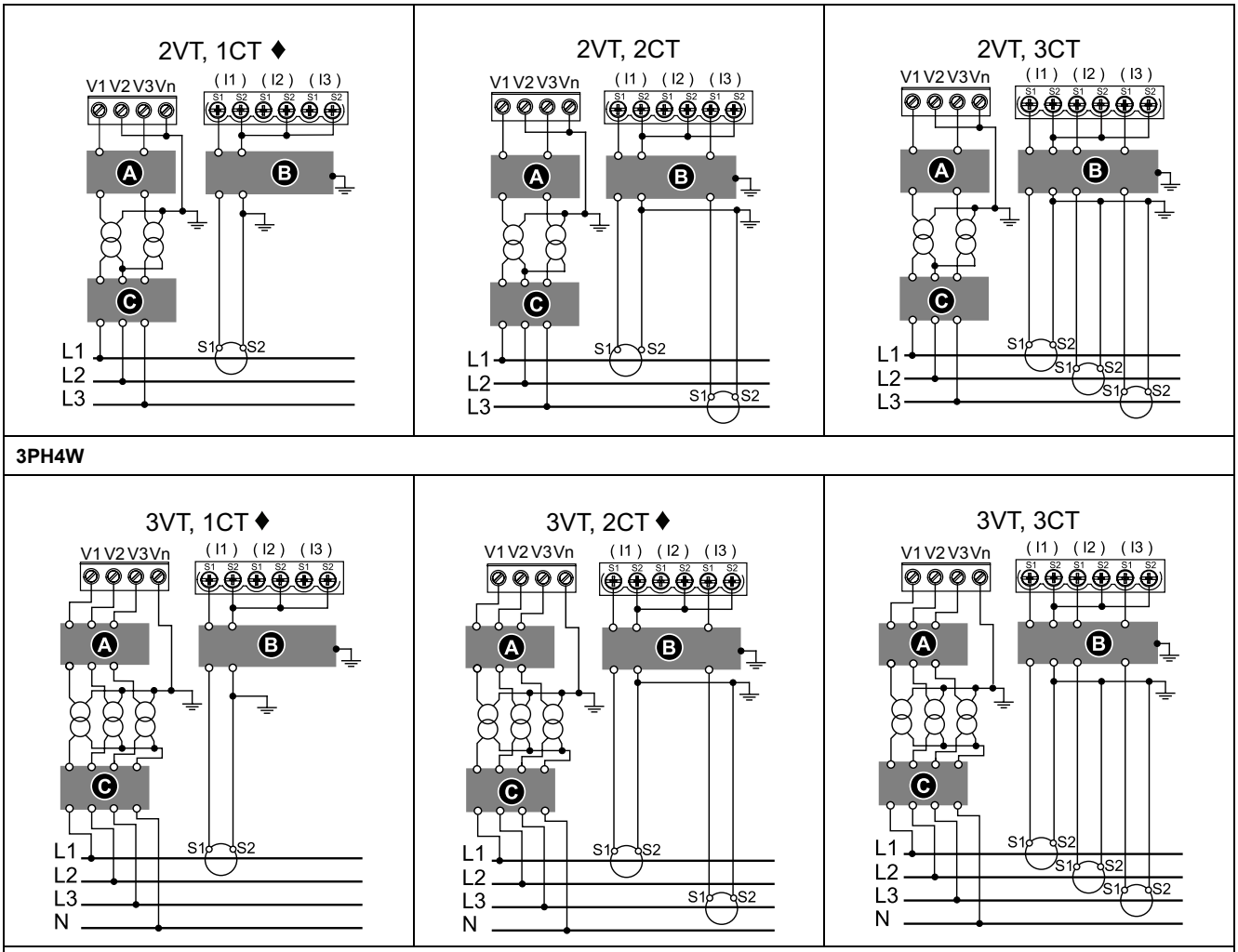

A **250 mA fuses and disconnect switch**

B **Shorting block**

C **VT primary fuses and disconnect switch**

♦ indicates wiring for a balanced system

Clearly label the device's disconnect circuit mechanism and install it within easy reach of the operator.

Fuses / circuit breakers must be:

- Installed in accordance with all local and national electrical codes and standards.
- Rated for the installation voltage, available fault current, and sized for connected loads.

Fuse for neutral is required if the source neutral is not grounded.

Input, output and communications wiring considerations

The pulse output is compatible with S0 format, and the programmable digital output is compatible with S0 format when configured as a pulse output.

The digital input and output are electrically independent.

The digital output is polarity-independent.

Digital input

Programmable (status, tariff control, or input monitoring): iEM3135 / iEM3155 / iEM3165 / iEM3175 / iEM3235 / iEM3255 / iEM3265 / iEM3275 / iEM3335 / iEM3355 / iEM3365 / iEM3375

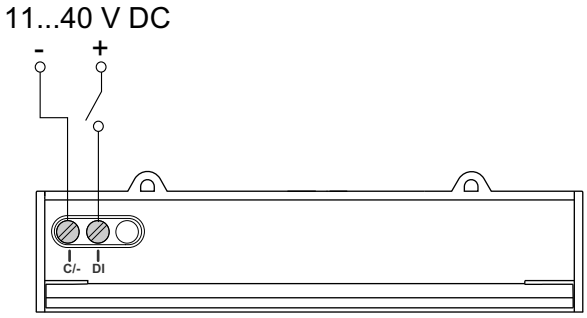

Tariff control only: iEM3115 / iEM3215

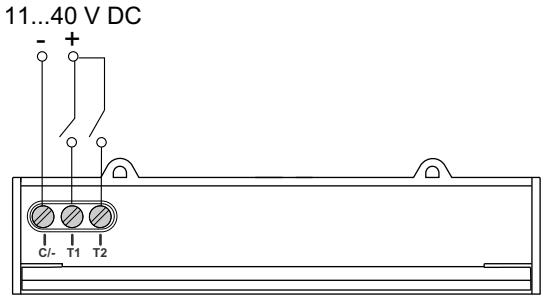

Digital output

Programmable (energy pulsing or overload alarm): iEM3135 / iEM3155 / iEM3165 / iEM3235 / iEM3255 / iEM3265 / iEM3335 / iEM3355 / iEM3365

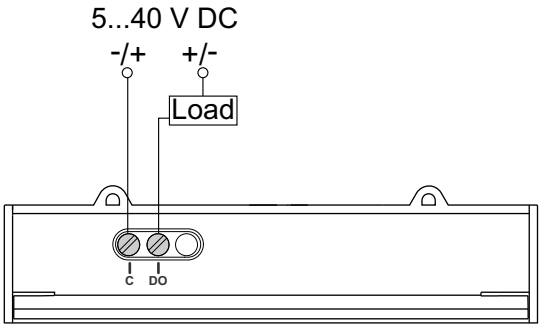

Pulse output: iEM3110 / iEM3210 / iEM3310

The pulse output indicates the primary consumption with consideration of transformer ratios.

It can be directly connected to a 24 V DC (< 30 V DC) input on a Zelio or Twido PLC.

For other concentrators, if V DC / Rin > 15 mA, add a resistor Radd = (V DC / 0.01) - Rin Ω

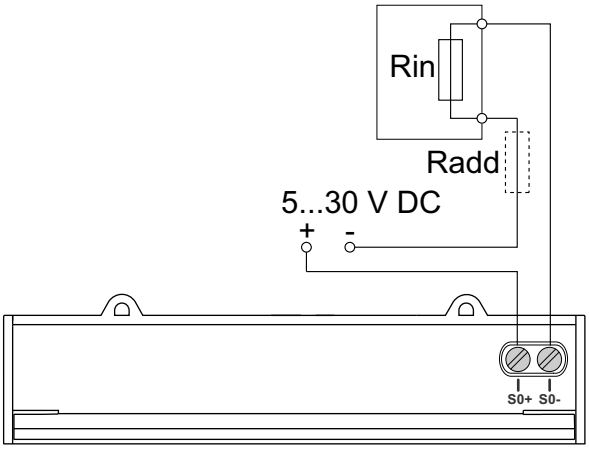

Modbus / BACnet RS-485 wiring: iEM3150 / iEM3155 / iEM3165 / iEM3250 / iEM3255 / iEM3265 / iEM3350 / iEM3355 / iEM3365

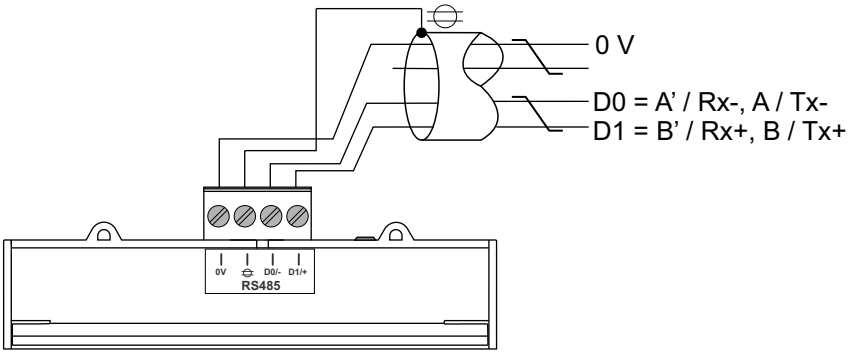

LonWorks / M-Bus wiring: iEM3135 / iEM3175 / iEM3235 / iEM3275 / iEM3335 / iEM3375

The Lon and M-Bus ports are polarity-independent.

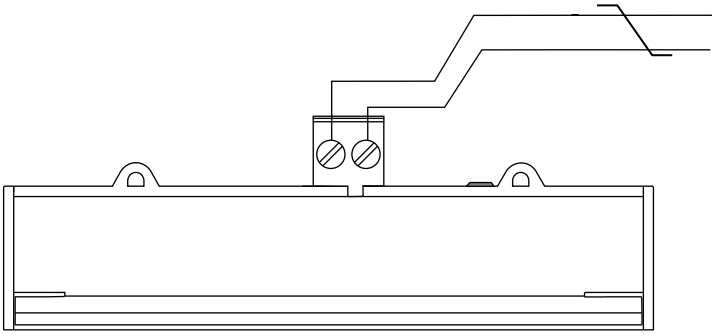

Meter sealing points

All meters have sealing covers and sealing points to help prevent access to inputs and outputs and current and voltage connections.

Dismounting

1. Use a flat-tip screwdriver (≤ 6.5 mm / 0.25 in) to lower the locking mechanism and release the meter.

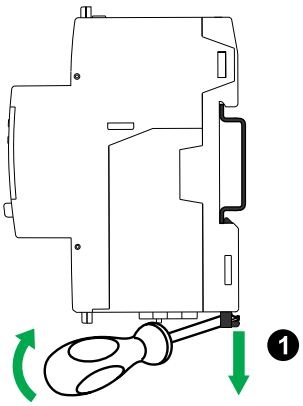

2. Lift the meter out and up to free it from the DIN rail.

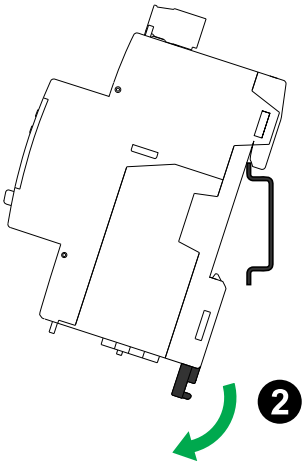

Considerations for iEM3100 series and iEM3300 series devices associated with a contactor

Connection requirements for iEM3110 / iEM3115 / iEM3135 / iEM3150 / iEM3155 / iEM3165 / iEM3175 / iEM3310 / iEM3335 / iEM3350 / iEM3355 / iEM3365 / iEM3375:

- When the meter is associated with a contactor, connect the meter upstream of the contactor.
- The meter must be protected by a circuit breaker.

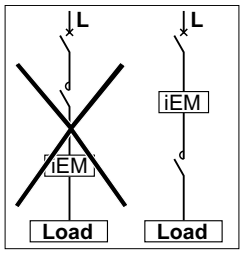

Front panel display and meter setup

Overview

The meter features a front panel with signaling LEDs, a graphical display, and menu buttons that allow you to access the information required to operate the meter and modify parameter settings.

The front panel also allows you to display, configure and reset parameters.

Some meters have the Multi Tariff feature, which allows you to configure different tariffs.

Data display

Data display screen overview

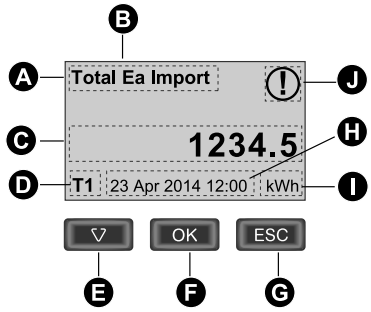

A	Measurement
B	Ea / Er = active / reactive energy (if available)
C	Value
D	Active tariff (if applicable)
E	Scroll through the available screens
F	View more screens related to the measurement category (if available)
G	Go back to previous screen
H	Date and time (if applicable)
I	Unit
J	Icon indicating date / time are not set

Example: navigating the display screens

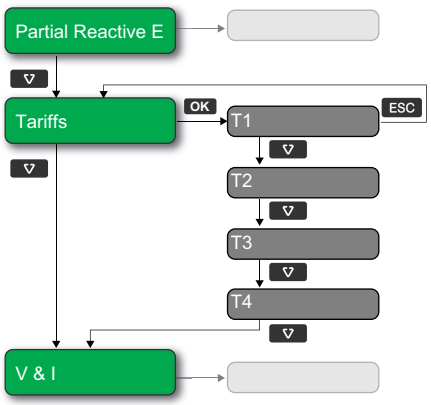

1. Press ▽ to scroll through the main display screens; then press ▽ to move from **Partial Reactive E** to **Tariffs** to **V & I**.
2. Press OK to access additional screens related to main screen (if available); then press OK to access screens for each of the available tariffs.
3. Press ▽ to scroll through these additional screens.

Meter status information

Two LEDs on the front panel indicate the current status of the device: the green status LED and the yellow energy pulsing LED.

The icons in the table below indicate the LED state:

- = LED is off
- = LED is on
- = LED is flashing

Status LED	Energy pulsing LED	Description
		Off
	1 s >	On, no pulse counting
		On, with pulse counting
		Error, pulse counting stopped
		Abnormal, with pulse counting

Backlight and error / alert icon

The backlight (display screen) and error / alert icon on the top right corner of the display screen indicate the meter status.

Backlight	Error / Alert icon	Description
OFF	–	Device not powered ON or device is OFF
ON / Dim	OFF	LCD is in power saving mode.
ON / Normal	OFF	Normal working status.
Flashing	Flashing	Alarm / diagnosis is active.
ON / Dim	Flashing	Alarm / diagnosis is active for 3 hours and LCD is in power saving mode.
ON / Normal ON / Dim	ON	Not active alarm. Logged alarms are not acknowledged by the user.

Data display screens

The following sections outline the data display screens available on the various meter models.

Data display screens: iEM3110 / iEM3115 / iEM3210 / iEM3215 / iEM3310

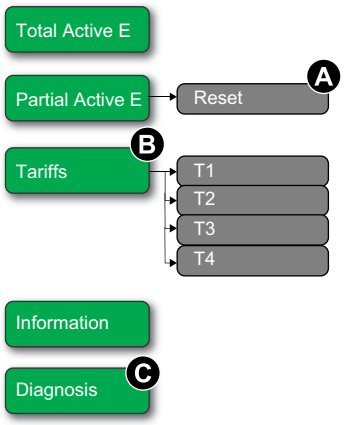

A	Resets all energy measurements except total active energy
B	iEM3115 / iEM3215
C	Diagnosis screen appears if there is a specific event

Data display screens: iEM3150 / iEM3250 / iEM3350

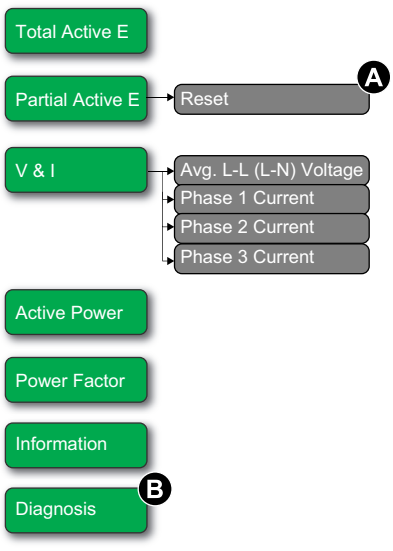

A	Resets all energy measurements except total active energy
B	Diagnosis screen appears if there is a specific event

Data display screens: iEM3135 / iEM3155 / iEM3165 / iEM3175 / iEM3235 / iEM3255 / iEM3265 / iEM3275 /iEM3335 / iEM3355 / iEM3365 / iEM3375

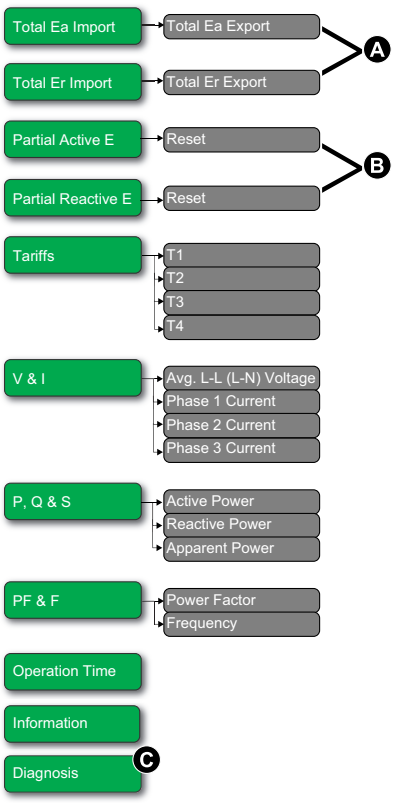

A	Import / export indicated for total active (Ea) and total reactive (Er) energy. Other energy measurements are import only
B	Resets all energy measurements except total active energy and total reactive energy
C	Diagnosis screen appears if there is a specific event

Resets

The following resets are available:

Reset	Description
Partial energy	Clears all active and reactive energy accumulated since the last reset. This does not reset the total active and reactive energy accumulation.
Input metering	Clears all input metering energy data. You can only reset the input metering accumulation using software.

Resetting accumulated energy using the display

1. Navigate to the **Partial Active E** or **Partial Reactive E** screen. The screen displays the date of the last reset. For example:

A	Date of last reset

2. Press and hold ESC. The **Reset** screen appears.

3. Press OK to confirm the reset and enter the meter password when prompted.

   NOTE: Regardless of the screen you use to access this reset, accumulations of both Partial Active Energy and the Partial Reactive Energy (if available) are cleared.

Multi Tariff feature

The Multi Tariff feature is available on iEM3115 / iEM3135 / iEM3155 / iEM3165 / iEM3175 / iEM3215 / iEM3235 / iEM3255 / iEM3265 / iEM3275 /iEM3335 / iEM3355 / iEM3365 / iEM3375 meter models.

The table below illustrates how the tariffs operate according to the tariff selection (2, 3 or 4 tariffs). These tariffs are stored in 4 different registers: T1, T2, T3 and T4.

	2 tariffs	3 tariffs	4 tariffs
Weekday	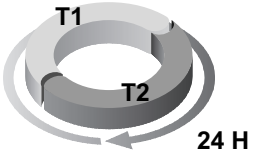	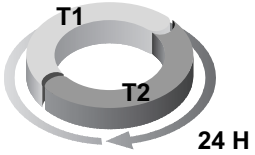	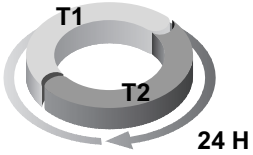
Weekend	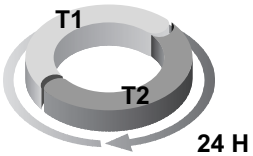	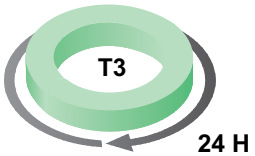	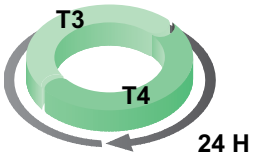

NOTE: If the tariff Control Mode is set to by Internal Clock, the start time of the next tariff is the end time of the current tariff. For example, T2 start equals the end of T1.

Meter information

Meter information (for example, model and firmware version) is available on the information screen. In display mode, press the down arrow until you reach the information screen:

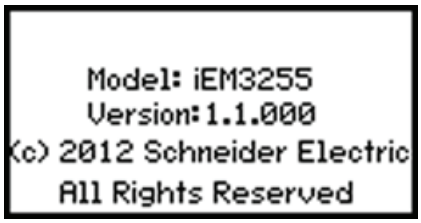

The device clock

You must reset the time to account for any time change (for example, to switch the time from standard time to daylight savings time).

Clock behavior: iEM3110 / iEM3210 / iEM3150 / iEM3250 / iEM3310 / iEM3350:

You are not prompted to set the date and time when the meter is powered up. You can enter configuration mode to set the date and time. If you have not set the clock, the following icon appears on the display: ⓘ.

When power is interrupted, the date and time are reset and you must enter configuration mode to configure the clock, if you require time information.

Clock behavior: iEM3115 / iEM3135 / iEM3155 / iEM3165 / iEM3175 / iEM3215 / iEM3235 / iEM3255 / iEM3265 / iEM3275 /iEM3335 / iEM3355 / iEM3365 / iEM3375:

You are prompted to set the date and time when the meter is powered up. Press ESC to skip this step if you do not want to set the clock (you can enter configuration mode and set the date and time later, if required).

When the power is interrupted, the device retains its date and time information for 3 days. If power is interrupted for longer than 3 days, the device automatically displays the screen to set **Date & Time** when power is restored.

Date/time format

The date is displayed in the following format: DD-MMM-YYYY.

The time is displayed using the 24-hour clock in the following format: hh:mm:ss.

Setting the clock initially

The image below illustrates how to set the clock when you initially power up the device or after a power failure. To set the clock during normal operation, refer to Device configuration, page 39.

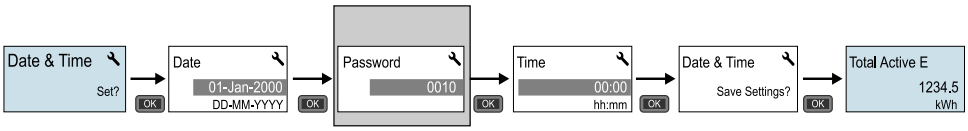

NOTE: Password entry is only required for meters that support a password.

Device configuration

The default factory settings (as applicable based on your model) are listed in the table below:

Menu	Factory settings
Wiring	iEM3100 series: 3PH4W iEM3200 series: 3PH4W; 3 CTs on I1, I2, and I3; Direct-No VT iEM3300 series: 3PH4W
CT Ratio	Varies depending on meter model
CT & VT Ratio	Varies depending on meter model
Frequency	50 Hz

Menu	Factory settings
Date	1-Jan-2000
Time	00:00:00
Multi Tariffs	Disable
Overload Alarm	Disable
Digital Output	Disable
Digital Input	Input Status
Pulse Output	100 imp/kWh
Communication	Varies depending on protocol
Com.Protection	Enable
Contrast	5
Password	0010

Entering configuration mode

1. Press and hold OK and ESC at the same time for about 2 seconds.
2. Enter the meter password, if prompted. The **Access Counter** screen displays, indicating the number of times the configuration mode has been accessed.

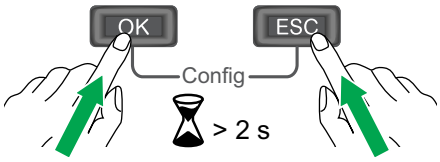

The front panel display in configuration mode

The image below illustrates the various elements of the display in configuration mode:

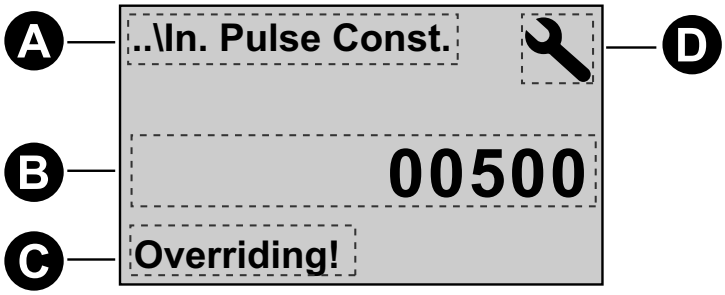

A	Parameter
B	Setting
C	Indicates that the setting impacts the Multi Tariff feature
D	Configuration mode icon

Com. Protection setting

For meters with communications capabilities, you can enable or disable the Com. Protection setting. If this setting is enabled, you must use the display to configure

certain settings (for example, wiring or frequency, etc.) and perform resets; you cannot use communications.

The protected settings and resets are:

- Power system settings (for example, wiring, frequency, CT ratios)
- Date and time settings
- Multi Tariff settings
- Communications settings
- Partial energy reset

Modifying parameters

There are two methods for modifying a parameter, depending on the type of parameter:

- Selecting a value in a list (for example, selecting 1PH2W L-N from a list of available power systems), or
- Modifying a numerical value, digit by digit (for example, entering a value for the date, time or VT primary).

NOTE: Before you modify any parameters, ensure that you are familiar with the HMI functionality and navigation structure of your device in configuration mode.

Selecting a value from a list

1. Use the ▽ button to scroll through the parameter values until you reach the desired value.
2. Press OK to confirm the new parameter value.

Example: Configuring a list value

To set the nominal frequency of the meter:

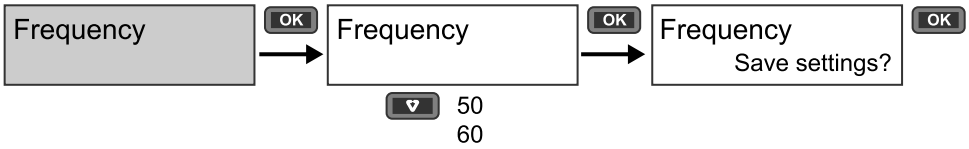

1. Enter configuration mode and press the ▽ button until you reach **Frequency** then press OK to access the frequency configuration.
2. Press the ▽ button to select the frequency you want then click OK. Press OK again to save your changes.

Modifying a numerical value

When you modify a numerical value, the digit on the far right side is selected by default (except for Date/Time).

The parameters listed below are the only ones for which you set a numerical value (if the parameter is available on your device):

- Date
- Time
- Pick Up Value for an overload alarm
- Voltage Transformer (VT) Primary

- Current Transformer (CT) Primary
- Password
- Address of the meter

To modify a numerical value:

1. Use the button to modify the selected digit.
2. Press OK to shift to next digit. Modify the next digit, if needed, or press okay to move to the next digit. Continue to move through the digits until you reach the last digit then press OK again to confirm the new parameter value.

   If you enter an invalid setting for the parameter, when you press OK after setting the left-most number, the cursor shifts back to the right-most number so you can enter a valid value.

Example: configuring a numeric value

To set the password:

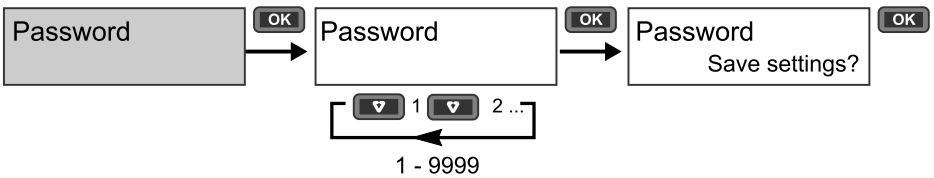

1. Enter configuration mode and press the button until you reach **Password** then press OK to access the password configuration.
2. Press the button to increment the selected digit or press OK to move to the next digit to the left. When you reach the left-most digit, press OK to move to the next screen. Press OK again to save your changes.

Cancelling an entry

To cancel the current entry, press the ESC button. The change is cancelled and the screen reverts to the previous display.

Configuration mode menus

The following images show the configuration navigation for each device.

Configuration menu for iEM3110 / iEM3115 / iEM3310

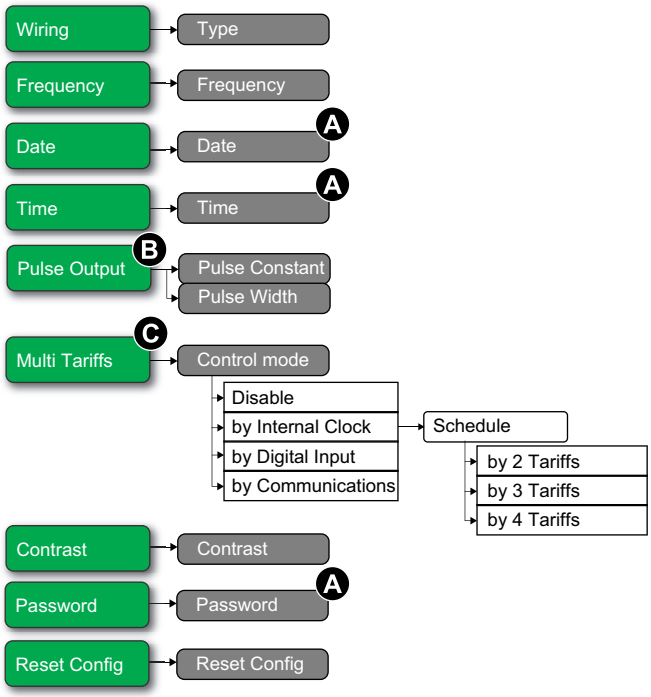

A	iEM3110 / iEM3115 / iEM3310
B	iEM3110 / iEM3310
C	iEM3115

Section	Parameter	Options	Description
Wiring	Type	3PH3W 3PH4W 1PH2W L-N 1PH2W L-L 1PH3W L-L-N	Select the power system type the meter is wired to.
Frequency	Frequency	50 60	Select the frequency of the electrical power system, in Hz.
Date (iEM3110 / iEM3115 / iEM3310)	Date	DD-MMM-YYYY	Set the current date using the specified format.
Time (iEM3110 / iEM3115 / iEM3310)	Time	hh:mm	Use the 24-hour format to set the time.
Pulse Output (iEM3110 / iEM3310)	Pulse Constant (imp/kWh)	100 200 1000 1 10 20	Set the pulses per kWh for the pulse output.
	Pulse Width (ms)	50 100 200 300	Set the pulse width (ON time).

Section	Parameter	Options	Description
Multi Tariffs (iEM3115)	Control Mode	Disable by Digital Input by Internal Clock	Select the tariff control mode: • Disable: the Multi Tariff function is disabled. • by Digital Input: the digital input is associated with the Multi Tariff function. A signal to the digital input changes the active tariff. • by Internal Clock: the device clock controls the active tariff. If you set the Control Mode to by Internal Clock, you must also configure the schedule. Set the time when each tariff period starts, using the 24 hour clock format (00:00 to 23:59). The start time of the next tariff is the end time of the current tariff. For example, T2 start equals the end of T1.
Contrast	Contrast	1 – 9	Increase or decrease the value to increase or decrease the display contrast.
Password (iEM3110 / iEM3115 / iEM3310)	Password	0 – 9999	Sets the password for accessing the meter configuration screens and resets.
Reset Config	Reset Config	—	Settings are reset to their defaults, except for Password. Meter restarts.

Configuration menu for iEM3150 / iEM3350

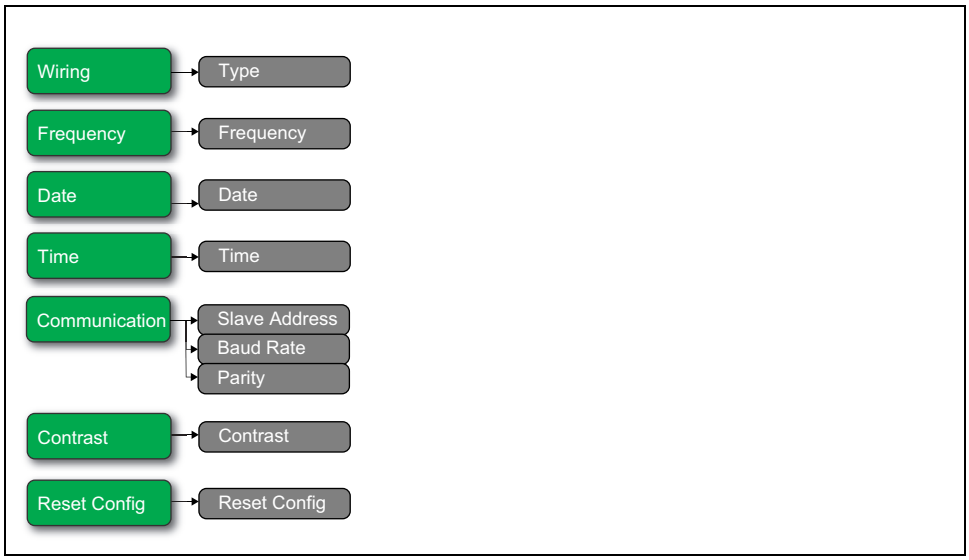

Section	Parameter	Options	Description
Wiring	Type	3PH4W 1PH2W L-N 1PH2W L-L 1PH3W L-L-N 3PH3W 1PH4W Multi L-N	Select the power system type the meter is wired to.
Frequency	Frequency	50 60	Select the frequency of the electrical power system, in Hz.
Date	Date	DD-MMM-YYYY	Set the current date using the specified format.
Time	Time	hh:mm	Set the time using the 24-hour format.

Section	Parameter	Options	Description
Communication	Slave Address	1 – 247	Set the address for this device. The address must be unique for each device in a communications loop.
	Baud Rate	19200 38400 9600	Select the speed for data transmission. The baud rate must be the same for all devices in a communications loop.
	Parity	Even Odd None	Select None if the parity bit is not used. The parity setting must be the same for all devices in a communications loop. **NOTE:** Number of stop bits = 1.
Contrast	Contrast	1 – 9	Increase or decrease the value to increase or decrease the display contrast.
Reset Config	Reset Config	—	Settings are reset to their defaults, except for Password. Meter restarts.

Configuration menu for iEM3135 / iEM3155 / iEM3165 / iEM3175 / iEM3335 / iEM3355 / iEM3365 / iEM3375

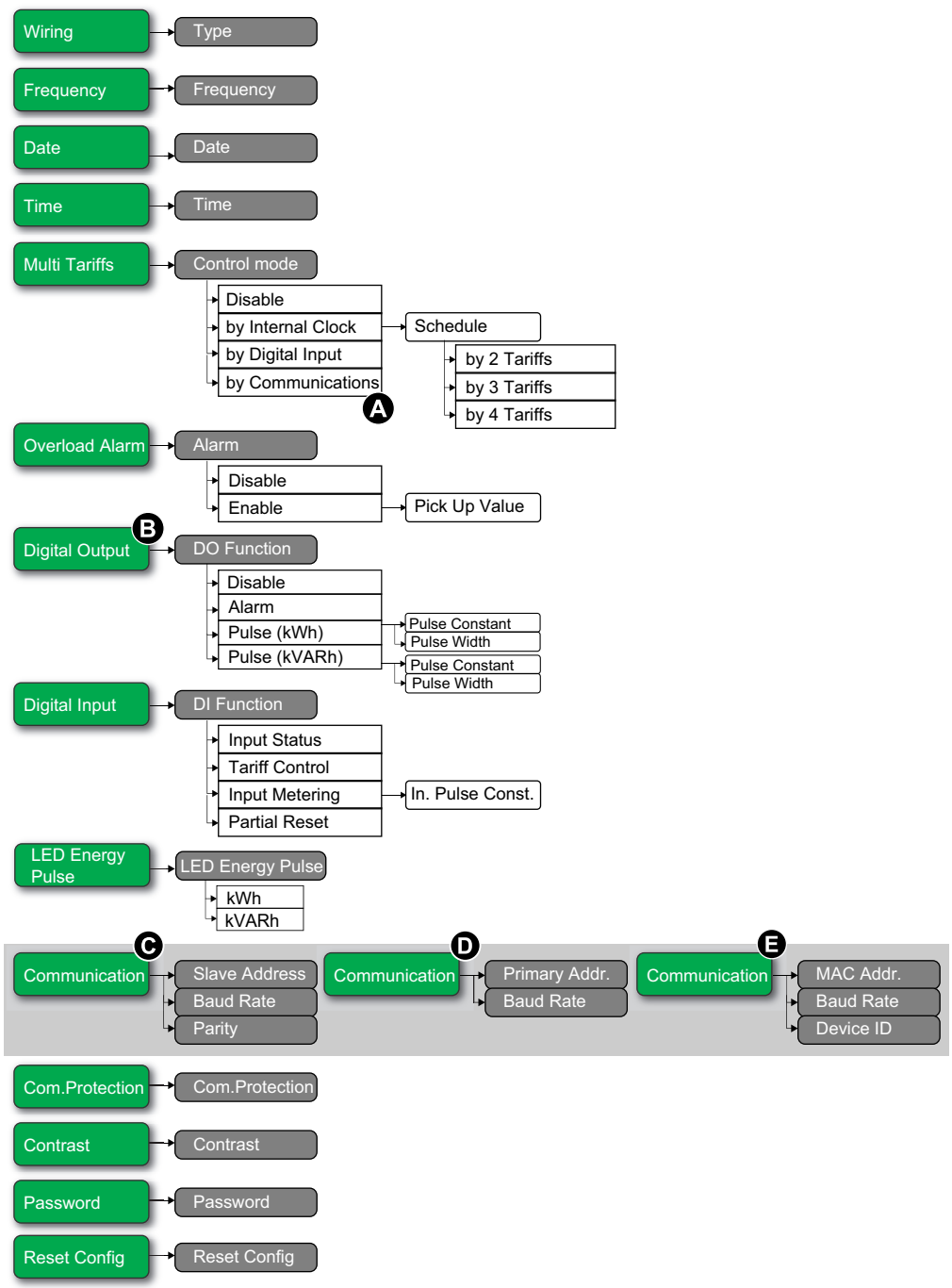

A	Not available on iEM3165 / iEM3365
B	Not available on iEM3175 / iEM3375
C	iEM3155 / iEM3355
D	iEM3135 / iEM3335
E	iEM3165 / iEM3365

Section	Parameter	Options	Description
Wiring	Type	3PH4W 1PH2W L-N 1PH2W L-L 1PH3W L-L-N 3PH3W 1PH4W Multi L-N	Select the power system type the meter is wired to.
Frequency	Frequency	50 60	Select the frequency of the electrical power system, in Hz.
Date	Date	DD-MMM-YYYY	Set the current date using the specified format.
Time	Time	hh:mm	Set the time using the 24-hour format.

Section	Parameter	Options	Description
Multi Tariffs	Control Mode	Disable by Communication by Digital Input by Internal Clock	Select the tariff control mode: • Disable: the Multi Tariff function is disabled. • by Communication: the active tariff is control by communications. See the chapter for the applicable protocol for more information. • by Digital Input: the digital input is associated with the Multi Tariff function. A signal to the digital input changes the active tariff. • by Internal Clock: the device clock controls the active tariff. If you set the Control Mode to by Internal Clock, you must also configure the schedule. Set the time when each tariff period starts, using the 24 hour clock format (00:00 to 23:59). The start time of the next tariff is the end time of the current tariff. For example, T2 start equals the end of T1.
Overload Alarm	Alarm	Disable Enable	Select whether or not the Overload Alarm is enabled: • Disable: the alarm is disabled. • Enable: the alarm is enabled. If you enabled the Overload Alarm, you must also configure the Pick Up Value in kW from 1 - 9999999.
Digital Output (Not available on iEM3175 / iEM3375)	DO Function	Disable Alarm Pulse (kWh) Pulse (kVARh)	Select how the digital output functions: • Disable: the digital output is disabled. • Alarm: the digital output is associated with the overload alarm. In the event of trigger, the digital output remains in the ON state until the alarm drop out point is crossed. • Pulse (kWh): The digital output is associated with energy pulsing (active energy). When this mode is selected, you can select the energy parameter and set the Pulse Constant (imp/kWh) and the Pulse Width (ms). • Pulse (kVARh): The digital output is associated with energy pulsing (reactive energy). When this mode is selected, you can select the energy parameter and set the Pulse Constant (imp/kVARh) and the Pulse Width (ms).
Digital Input	DI Function	Input Status Tariff Control Input Metering Partial Reset	Select how the digital input functions: • Input status: the digital input records the status of the input, for example, OF, SD of a circuit breaker. • Tariff Control: the digital input is associated with the Multi Tariff function. A signal to the digital input changes the active tariff. • Input Metering: the digital input is associated with input metering. The meter counts and records the number of incoming pulses. If you set the DI Function to Input Metering, you must also configure In. Pulse Constant. • Partial Reset: a signal to the digital input initiates a partial reset.
LED Energy Pulse	Energy	kWh kVARh	Set the active energy and reactive energy.
Communication (iEM3155 / iEM3355)	Slave Address	1 – 247	Set the address for this device. The address must be unique for each device in a communications loop.
	Baud Rate	19200 38400 9600	Select the speed for data transmission. The baud rate must be the same for all devices in a communications loop.
	Parity	Even Odd None	Select None if the parity bit is not used. The parity setting must be the same for all devices in a communications loop. **NOTE:** Number of stop bits = 1.
Communication (iEM3135 / iEM3335)	Primary Addr.	0 – 255	Set the address for this device. The address must be unique for each device in a communications loop.
	Baud Rate	2400 4800 9600 300 600 1200	Select the speed for data transmission. The baud rate must be the same for all devices in a communications loop.

Section	Parameter	Options	Description
Communication (iEM3165 / iEM3365)	MAC Addr.	1 – 127	Set the address for this device. The address must be unique for each device in a communications loop.
	Baud Rate	9600 19200 38400 57600 76800	Select the speed for data transmission. The baud rate must be the same for all devices in a communications loop.
	Device ID	0 – 4194303	Set the Device ID for this device. Make sure the Device ID is unique in your BACnet network.
Com.Protection	Com.Protection	Enable Disable	Protects selected settings and resets from configuration via communications.
Contrast	Contrast	1 – 9	Increase or decrease the value to increase or decrease the display contrast.
Password	Password	0 – 9999	Sets the password for accessing the meter configuration screens and resets.
Reset Config	Reset Config	—	Settings are reset to their defaults, except for Password. Meter restarts.

Configuration menu for iEM3210 / iEM3215

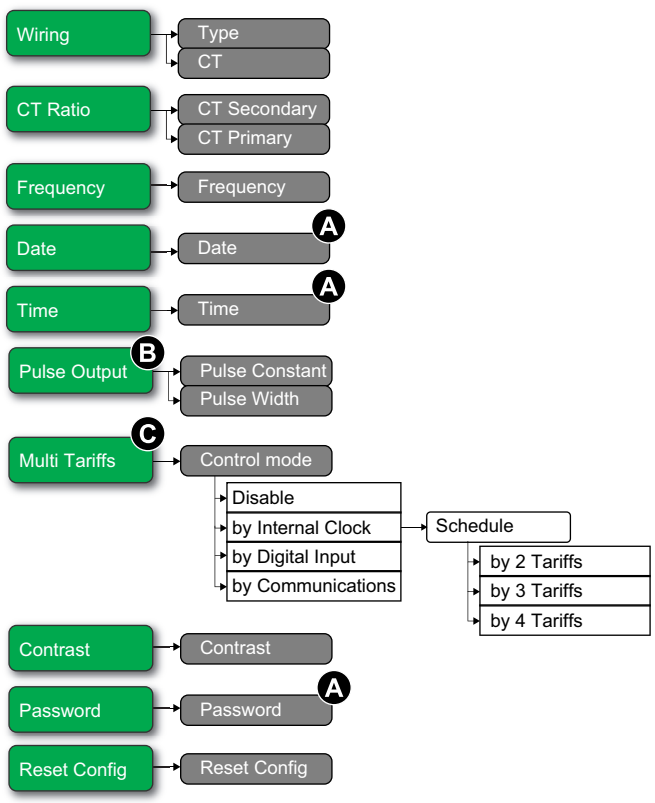

A	iEM3210 / iEM3215
B	iEM3210
C	iEM3215

Section	Parameter	Options	Description
Wiring	Type	3PH3W 3PH4W 1PH2W L-N 1PH2W L-L 1PH3W L-L-N	Select the power system type the meter is wired to.
	CT	3CTs on I1, I2, I3 1 CT on I1 2 CTs on I1, I3	Define how many current transformers (CT) are connected to the meter and which terminals they are connected to.
CT Ratio	CT Secondary	1 5	Select the size of the CT secondary, in Amps.
	CT Primary	1 to 32767	Enter the size of the CT primary, in Amps.
Frequency	Frequency	50 60	Select the frequency of the electrical power system, in Hz.
Date (iEM3210 / iEM3215)	Date	DD-MMM-YYYY	Set the current date using the specified format.
Time (iEM3210 / iEM3215)	Time	hh:mm	Set the time using the 24-hour format.
Pulse Output (iEM3210)	Pulse Constant (imp/kWh)	0.01 0.1 1 10 100 500	Set the pulses per kWh for the pulse output.
	Pulse Width (ms)	50 100 200 300	Set the pulse width (ON time).
Multi Tariffs (iEM3215)	Control Mode	Disable by Digital Input by Internal Clock by Communication	Select the tariff control mode: • Disable: the Multi Tariff function is disabled. • by Communication: the active tariff is control by communications. See the chapter for the applicable protocol for more information. • by Digital Input: the digital input is associated with the Multi Tariff function. A signal to the digital input changes the active tariff. • by Internal Clock: the device clock controls the active tariff. If you set the Control Mode to by Internal Clock, you must also configure the schedule. Set the time when each tariff period starts, using the 24 hour clock format (00:00 to 23:59). The start time of the next tariff is the end time of the current tariff. For example, T2 start equals the end of T1.
Contrast	Contrast	1 – 9	Increase or decrease the value to increase or decrease the display contrast.
Password (iEM3210 / iEM3215)	Password	0 – 9999	Sets the password for accessing the meter configuration screens and resets.
Reset Config	Reset Config	—	Settings are reset to their defaults, except for Password. Meter restarts.

Configuration menu for iEM3250

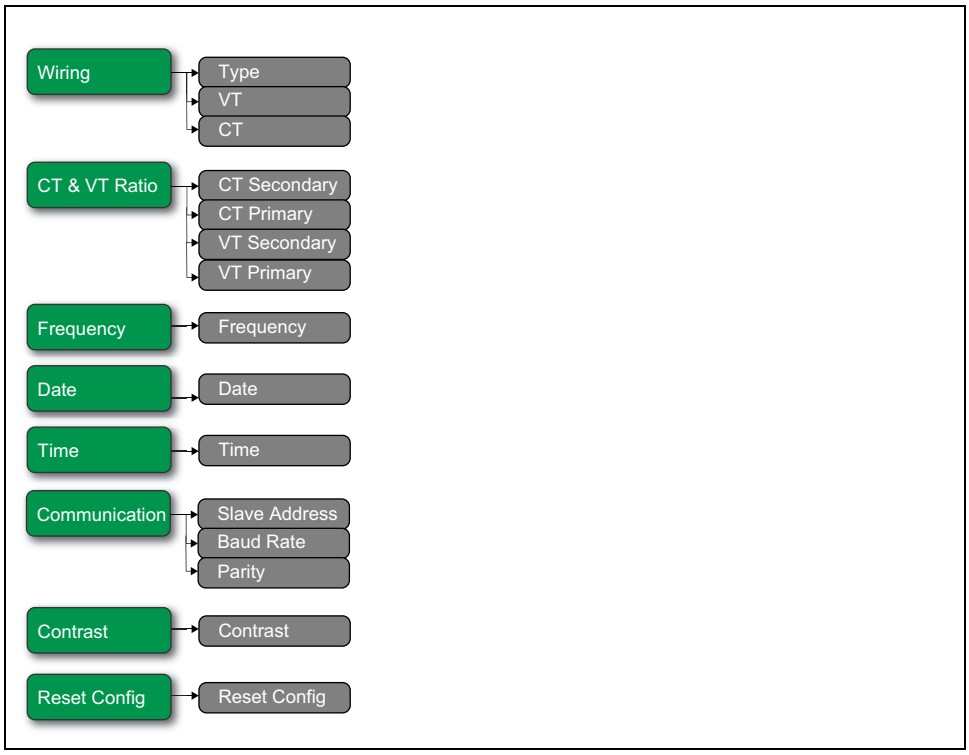

Section	Parameter	Options	Description
Wiring	Type	3PH4W 1PH2W L-N 1PH2W L-L 1PH3W L-L-N 3PH3W 1PH4W Multi L-N	Select the power system type the meter is wired to.
	VT	Direct-NoVT Wye (3VTs) Delta (2VTs)	Select how many voltage transformers (VT) are connected to the electrical power system.
	CT	3CTs on I1, I2, I3 1 CT on I1 2 CTs on I1, I3	Define how many current transformers (CT) are connected to the meter and which terminals they are connected to.
CT & VT Ratio	CT Secondary	1 5	Select the size of the CT secondary, in Amps.
	CT Primary	1 to 32767	Enter the size of the CT primary, in Amps.
	VT Secondary	100 110 115 120	Select the size of the VT secondary, in Volts.
	VT Primary	1 to 1000000	Enter the size of the VT primary, in Volts.
Frequency	Frequency	50 60	Select the frequency of the electrical power system, in Hz.
Date	Date	DD-MMM-YYYY	Set the current date using the specified format.
Time	Time	hh:mm	Set the time using the 24-hour format.

Section	Parameter	Options	Description
Communication	Slave Address	1 – 247	Set the address for this device. The address must be unique for each device in a communications loop.
	Baud Rate	19200 38400 9600	Select the speed for data transmission. The baud rate must be the same for all devices in a communications loop.
	Parity	Even Odd None	Select None if the parity bit is not used. The parity setting must be the same for all devices in a communications loop. **NOTE:** Number of stop bits = 1.
Contrast	Contrast	1 – 9	Increase or decrease the value to increase or decrease the display contrast.
Reset Config	Reset Config	—	Settings are reset to their defaults, except for Password. Meter restarts.

Configuration menu for iEM3235 / iEM3255 / iEM3265 / iEM3275

A	Not available on iEM3265
B	iEM3235 / iEM3255 / iEM3265
C	iEM3255
D	iEM3235
E	iEM3265

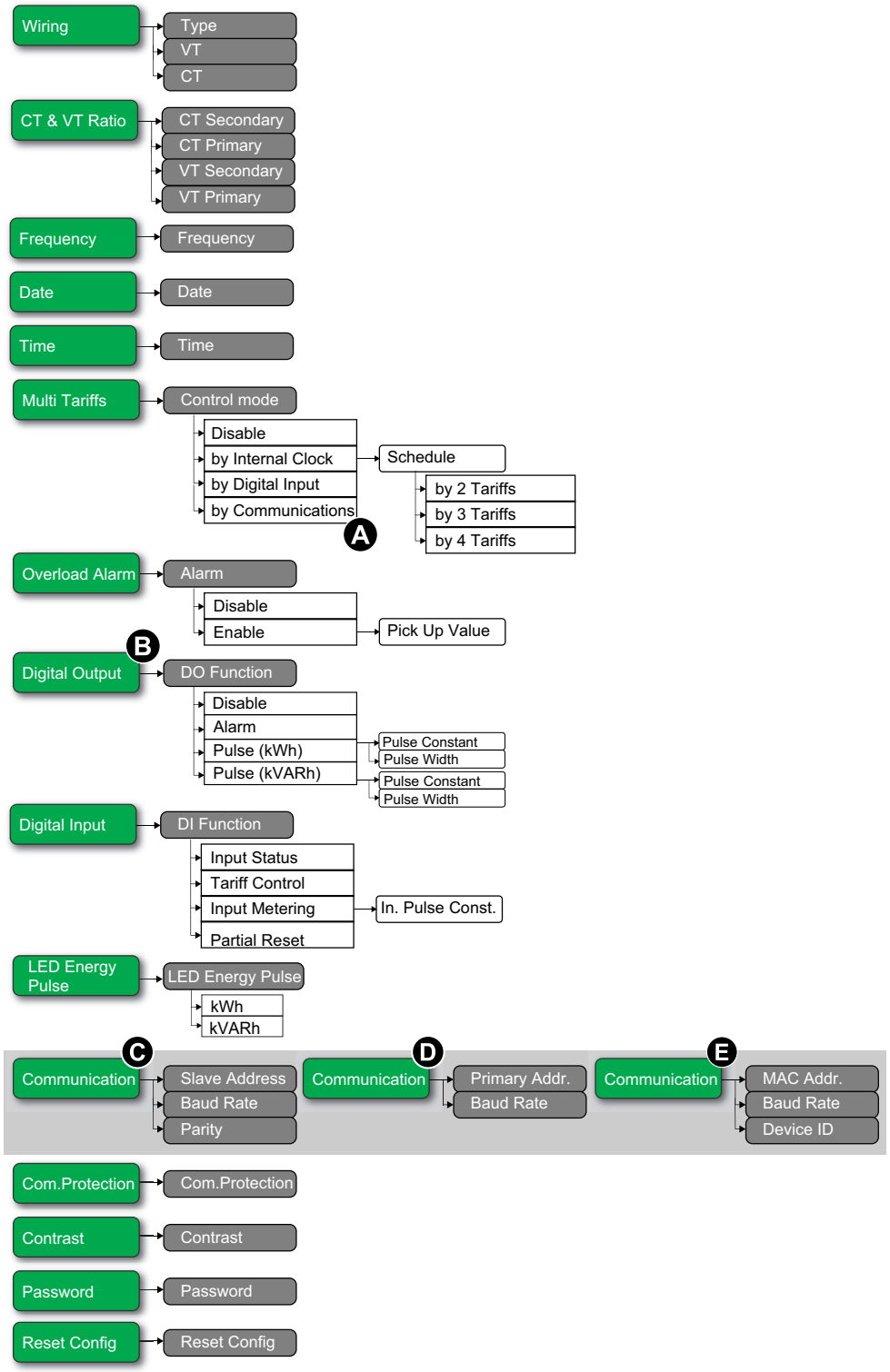

Section	Parameter	Options	Description
Wiring	Type	3PH3W 3PH4W 1PH2W L-N 1PH2W L-L 1PH3W L-L-N 1PH4W Multi L-N	Select the power system type the meter is wired to.
	VT	Direct-NoVT Wye (3VTs) Delta (2VTs)	Select how many voltage transformers (VT) are connected to the electrical power system.
	CT	3CTs on I1, I2, I3 1 CT on I1 2 CTs on I1, I3	Define how many current transformers (CT) are connected to the meter and which terminals they are connected to.
CT & VT Ratio	CT Secondary	1 5	Select the size of the CT secondary, in Amps.
	CT Primary	1 to 32767	Enter the size of the CT primary, in Amps.
	VT Secondary	100 110 115 120	Select the size of the VT secondary, in Volts.
	VT Primary	1 to 1000000	Enter the size of the VT primary, in Volts.
Frequency	Frequency	50 60	Select the frequency of the electrical power system, in Hz.
Date	Date	DD-MMM-YYYY	Set the current date using the specified format.
Time	Time	hh:mm	Set the time using the 24-hour format.
Multi Tariffs	Control Mode	Disable by Communication by Digital Input by Internal Clock	Select the tariff control mode: • Disable: the Multi Tariff function is disabled. • by Communication: the active tariff is control by communications. See the chapter for the applicable protocol for more information. • by Digital Input: the digital input is associated with the Multi Tariff function. A signal to the digital input changes the active tariff. • by Internal Clock: the device clock controls the active tariff. If you set the Control Mode to by Internal Clock, you must also configure the schedule. Set the time when each tariff period starts, using the 24 hour clock format (00:00 to 23:59). The start time of the next tariff is the end time of the current tariff. For example, T2 start equals the end of T1.
Overload Alarm	Alarm	Disable Enable	Select whether or not the Overload Alarm is enabled: • Disable: the alarm is disabled. • Enable: the alarm is enabled. If you enabled the Overload Alarm, you must also configure the Pick Up Value in kW from 1 - 9999999.
Digital Output (iEM3235 / iEM3255 / iEM3265)	DO Function	Disable Alarm Pulse (kWh) Pulse (kVARh)	Select how the digital output functions: • Disable: the digital output is disabled. • Alarm: the digital output is associated with the overload alarm. In the event of trigger, the digital output remains in the ON state until the alarm drop out point is crossed. • Pulse (kWh): The digital output is associated with energy pulsing (active energy). When this mode is selected, you can select the energy parameter and set the Pulse Constant (imp/kWh) and the Pulse Width (ms). • Pulse (kVARh): The digital output is associated with energy pulsing (reactive energy). When this mode is selected, you can select the energy parameter and set the Pulse Constant (imp/kVARh) and the Pulse Width (ms). **NOTE:** The iEM3275 does not have a digital output.

Section	Parameter	Options	Description
Digital Input	DI Function	Input Status Tariff Control Input Metering Partial Reset	Select how the digital input functions: • Input status: the digital input records the status of the input, for example, OF, SD of a circuit breaker. • Tariff Control: the digital input is associated with the Multi Tariff function. A signal to the digital input changes the active tariff. • Input Metering: the digital input is associated with input metering. The meter counts and records the number of incoming pulses. If you set the DI Function to Input Metering, you must also configure In. Pulse Constant. • Partial Reset: a signal to the digital input initiates a partial reset.
LED Energy Pulse	Energy	kWh kVARh	Set the active energy and reactive energy.
Communication (iEM3255)	Slave Address	1 – 247	Set the address for this device. The address must be unique for each device in a communications loop.
	Baud Rate	19200 38400 9600	Select the speed for data transmission. The baud rate must be the same for all devices in a communications loop.
	Parity	Even Odd None	Select None if the parity bit is not used. The parity setting must be the same for all devices in a communications loop. **NOTE:** Number of stop bits = 1.
Communication (iEM3235)	Primary Addr.	0 – 255	Set the address for this device. The address must be unique for each device in a communications loop.
	Baud Rate	2400 4800 9600 300 600 1200	Select the speed for data transmission. The baud rate must be the same for all devices in a communications loop.
Communication (iEM3265)	MAC Addr.	1 – 127	Set the address for this device. The address must be unique for each device in a communications loop.
	Baud Rate	9600 19200 38400 57600 76800	Select the speed for data transmission. The baud rate must be the same for all devices in a communications loop.
	Device ID	0 – 4194303	Set the Device ID for this device. Make sure the Device ID is unique in your BACnet network.
Com.Protection	Com.Protection	Enable Disable	Protects selected settings and resets from configuration via communications.
Contrast	Contrast	1 – 9	Increase or decrease the value to increase or decrease the display contrast.
Password	Password	0 – 9999	Sets the password for accessing the meter configuration screens and resets.
Reset Config	Reset Config	—	Settings are reset to their defaults, except for Password. Meter restarts.

Communications using Modbus

Modbus communication overview

Modbus RTU protocol is available on iEM3150 / iEM3155 / iEM3250 / iEM3255 / iEM3350 / iEM3355 meter models.

The information in this section assumes that you have an advanced understanding of Modbus communications, your communications network and the power system that your meter is connected to.

There are three different ways of using Modbus communication:

- By sending commands using the command interface
- By reading the Modbus registers
- By reading Device Identification

Modbus communications settings

Before communicating with the device using Modbus protocol, use the display to configure the following settings:

Settings	Possible values
Baud rate	9600 Baud 19200 Baud 38400 Baud
Parity	Odd Even None **NOTE:** Number of stop bits = 1
Address	1 – 247

Communications LED indicator for Modbus devices

The yellow communications LED indicates the status of communication between the meter and the master as follows:

If...	Then...
The LED is flashing	Communication with the device has been established. **NOTE:** If there is an error online, the LED also flashes.
The LED is off	There is no active communication between the master and the slave

Modbus functions

Function list

The table below lists the supported Modbus functions:

Function code		Function name
Decimal	Hexadecimal	
3	0x03	Read Holding Registers
16	0x10	Write Multiple Registers
43/14	0x2B/0x0E	Read Device Identification

For example:

- To read different parameters from the meter, use function 3 (Read).
- To change the tariff, use function 16 (Write) to send a command to the meter.

Table format

Register tables have the following columns:

Address	Register	Action (R/W/WC)	Size	Type	Units	Range	Description

- ***Address***: A 16-bit register address in hexadecimal. The address is the data used in the Modbus frame.
- ***Register***: A 16-bit register number in decimal (register = address + 1).
- ***Action***: The read/write/write by command property of the register.
- ***Size***: The data size in Int16.
- ***Type***: The encoding data type.
- ***Units***: The unit of the register value.
- ***Range***: The permitted values for this variable, usually a subset of what the format allows.
- ***Description***: Provides information about the register and the values that apply.

Unit table

The following data types appear in the Modbus register list:

Type	Description	Range
UInt16	16 bit unsigned integer	0 to 65535
Int16	16 bit signed integer	-32768 to +32767
UInt32	32 bit unsigned integer	0 to 4 294 967 295
Int64	64 bit unsigned integer	0 to 18 446 744 073 709 551 615
UTF8	8 bit field	Multi byte character encoding for Unicode
Float32	32 bit value	Standard representation IEEE for floating number (with single precision))
Bitmap	—	—
DATETIME	See below table	—

DATETIME format:

Word	Bits															
	15	14	13	12	11	10	9	8	7	6	5	4	3	2	1	0
1	Reserved								R4 (0)	Year (0 – 127)						
2	0				Month (1 – 12)				WD (0)			Day (1 – 31)				
3	SU (0)	0		Hour (0 – 23)					iV	0	Minute (0 – 59)					

DATETIME format: (Continued)

Word	Bits															
	15	14	13	12	11	10	9	8	7	6	5	4	3	2	1	0
4	Millisecond (0 – 59999)															

R4 :	Reserved Bit
Year :	7 bits (year from 2000)
Month :	4 bits
Day :	5 bits
Hour :	5 bits
Minute :	6 bits
Millisecond :	2 octets
WD (day of the week) :	1 – 7: Sunday – Saturday
SU (summer time) :	Bit to 0 if this parameter is not used
iV (validity of received data) :	Bit to 0 if this parameter is not valid or not used

Command interface

Command interface overview

The command interface allows you to configure the meter by sending specific command requests using Modbus function 16.

Command request

The table below describes a Modbus command request:

Slave Number	Function Code	Command block		CRC
		Register Address	Command Description	
1 – 247	16	5250 (up to 5374)	The command is made of a command number and a set of parameters. See the detailed description of each command in the command list. **NOTE:** All the reserved parameters can be considered as any value, e.g. 0.	Checking

The command result can be obtained by reading registers 5375 and 5376.

The table below describes the Command result:

Register Address	Content	Size (Int16)	Data (example)
5375	Requested Command Number	1	2008 (Set Tariff)
5376	Result Command result codes: • 0 = Valid Operation • 3000 = Invalid Command • 3001 = Invalid Parameter • 3002 = Invalid Number of Parameters • 3007 = Operation Not Performed	1	0 (Valid Operation)

Command list

Set Date/Time

Command Number	Action (R/W)	Size	Type	Unit	Range	Description
1003	W	1	UInt16	—	—	(Reserved)
	W	1	UInt16	—	2000 – 2099	Year
	W	1	UInt16	—	1 – 12	Month
	W	1	UInt16	—	1 – 31	Day
	W	1	UInt16	—	0 – 23	Hour
	W	1	UInt16	—	0 – 59	Minute
	W	1	UInt16	—	0 – 59	Second
	W	1	UInt16	—	—	(Reserved)

Set Wiring

Command Number	Action (R/W)	Size	Type	Unit	Range	Description
2000	W	1	UInt16	—	—	(Reserved)
	W	1	UInt16	—	1, 3	Number of phases
	W	1	UInt16	—	2, 3, 4	Number of wires
	W	1	UInt16	—	0, 1, 2, 3, 11,13	Power System Configuration: 0 = 1PH2W L-N 1 = 1PH2W L-L 2 = 1PH3W L-L-N 3 = 3PH3W 11 = 3PH4W 13 = 1PH4W L-N
	W	1	UInt16	Hz	50, 60	Nominal Frequency
	W	2	Float32	—	—	(Reserved)
	W	2	Float32	—	—	(Reserved)
	W	2	Float32	—	—	(Reserved)
	W	1	UInt16	—	—	(Reserved)
	W	1	UInt16	—	—	(Reserved)
	W	2	Float32	V	1000000.0	VT Primary **NOTE:** For iEM3250 / iEM3255. Reserved by iEM3150 / iEM3155 / iEM3350 / iEM3355
	W	1	UInt16	V	100, 110, 115, 120	VT Secondary **NOTE:** For iEM3250 / iEM3255. Reserved by iEM3150 / iEM3155 / iEM3350 / iEM3355
	W	1	UInt16	—	1, 2, 3	Number of CTs **NOTE:** For iEM3250 / iEM3255. Reserved by iEM3150 / iEM3155 / iEM3350 / iEM3355
	W	1	UInt16	A	1 to 32767	CT Primary **NOTE:** For iEM3250 / iEM3255. Reserved by iEM3150 / iEM3155 / iEM3350 / iEM3355
	W	1	UInt16	—	—	(Reserved)
	W	1	UInt16	—	—	(Reserved)
	W	1	UInt16	—	—	(Reserved)

Command Number	Action (R/W)	Size	Type	Unit	Range	Description
	W	1	UInt16	—	—	(Reserved)
	W	1	UInt16	—	0, 1, 2	VT Connection type: 0 = Direct Connect 1 = 3PH3W (2 VTs) 2 = 3PH4W (3 VTs) **NOTE:** For iEM3250 / iEM3255. Reserved by iEM3150 / iEM3155 / iEM3350 / iEM3355

Set Pulse Output (iEM3155 / iEM3255 / iEM3355)

Command Number	Action (R/W)	Size	Type	Unit	Range	Description
2003	W	1	UInt16	—	—	(Reserved)
	W	1	UInt16	kWh kVARh	3, 6	Digital Output Control Mode Status: 3 = kWh 6 = kVARh
	W	1	UInt16	—	0, 1	Pulse Output enable / disable: 0 = Disable 1 = Enable
	W	2	Float32	pulse/kWh	iEM3155 / iEM3355: 1, 10, 20, 100, 200, 1000 iEM3255: 0.01, 0.1, 1, 10, 100, 500	Pulse constant
	W	1	UInt16	—	—	(Reserved)
	W	1	UInt16	—	—	(Reserved)
	W	2	Float32	—	—	(Reserved)
	W	1	UInt16	—	—	(Reserved)
	W	1	UInt16	—	—	(Reserved)
	W	2	Float32	—	—	(Reserved)
2038	W	1	UInt16	—	—	(Reserved)
	W	1	UInt16	—	—	(Reserved)
	W	1	UInt16	ms	50, 100, 200, 300	Pulse width
2039	W	1	UInt16	—	—	(Reserved)
	W	1	UInt16	imp/kWh imp/KVARh	0, 1	LED energy pulse: 0 = kWh 1 = kVARh

Set Tariff (iEM3155 / iEM3255 / iEM3355)

Command Number	Action (R/W)	Size	Type	Unit	Range	Description
2060	W	1	UInt16	—	—	(Reserved)
	W	1	UInt16	—	0, 1, 2, 4	Multi Tariff Mode: 0 = Disable Multi Tariff 1 = Use COM as Tariff Control (maximum 4 tariffs) 2 = Use Digital Input as Tariff Control (2 tariffs)

Command Number	Action (R/W)	Size	Type	Unit	Range	Description
						4 = Use Internal Clock as Tariff Control (maximum 4 tariffs)
2008	W	1	UInt16	—	—	(Reserved)
	W	1	UInt16	—	1 – 4	Tariff: 1 = T1 2 = T2 3 = T3 4 = T4 **NOTE:** You can only set the tariff using this method if the Tariff Mode is set to by Communication.

Set Digital Input as Partial Energy Reset (iEM3155 / iEM3255 / iEM3355)

Command Number	Action (R/W)	Size	Type	Unit	Range	Description
6017	W	1	UInt16	—	—	(Reserved)
	W	1	UInt16	—	0, 1	Digital Input to Associate: 0 = Disable 1 = Enable

Input Metering Setup (iEM3155 / iEM3255 / iEM3355)

Command Number	Action (R/W)	Size	Type	Unit	Range	Description
6014	W	1	UInt16	—	—	(Reserved)
	W	1	UInt16	—	1	Input Metering Channel
	W	20	UTF8	—	String size ≤ 40	Label
	W	2	Float32	—	1 – 10000	Pulse Weight
	W	1	UInt16	—	—	(Reserved)
	W	1	UInt16	—	0, 1	Digital Input Association: 0 = Disable 1 = Enable

Overload Alarm Setup (iEM3155 / iEM3255 / iEM3355)

Command Number	Action (R/W)	Size	Type	Unit	Range	Description
7000	W	1	UInt16	—	—	(Reserved)
	W	1	UInt16	—	9	Alarm ID
	W	1	UInt16	—	—	(Reserved)
	W	1	UInt16	—	—	(Reserved)
	W	1	UInt16	—	—	(Reserved)
	W	1	UInt16	—	0, 1	0 = Disable 1 = Enable
	W	2	Float32	—	0.0 – 1e10	Pickup value
	W	2	UInt32	—	—	(Reserved)

Command Number	Action (R/W)	Size	Type	Unit	Range	Description
	W	2	Float32	—	—	(Reserved)
	W	2	UInt32	—	—	(Reserved)
	W	1	UInt16	—	—	(Reserved)
	W	4	UInt16	—	—	(Reserved)
	W	1	UInt16	—	—	(Reserved)
	W	1	UInt16	—	—	(Reserved)
20000	W	1	UInt16	—	—	(Reserved)
	W	2	Float32	—	—	(Reserved)
	W	2	UInt32	—	—	(Reserved)
	W	1	Bitmap	—	0, 1	Digital Output to Associate: 0 = Unassociated 1 = Associated
20001	W	1	UInt16	—	—	Acknowledge the Overload Alarm

Communications Setup

Command Number	Action (R/W)	Size	Type	Unit	Range	Description
5000	W	1	UInt16	—	—	(Reserved)
	W	1	UInt16	—	—	(Reserved)
	W	1	UInt16	—	—	(Reserved)
	W	1	UInt16	—	1 – 247	Address
	W	1	UInt16	—	0, 1, 2	Baud Rate: 0 = 9600 1 = 19200 2 = 38400
	W	1	UInt16	—	0, 1, 2	Parity: 0 = Even 1 = Odd 2 = None
	W	1	UInt16	—	—	(Reserved)

Reset Partial Energy Counters

Command Number	Action (R/W)	Size	Type	Unit	Range	Description
2020	W	1	UInt16	—	—	(Reserved) iEM3150 / iEM3250 / iEM3350: Partial Active Energy and Phase Energy registers will be reset iEM3155 / iEM3255 / iEM3355: Partial Active / Reactive Energy, Energy by tariff and Phase Energy registers will be reset.

Reset Input Metering Counter (iEM3155 / iEM3255 / iEM3355)

Command Number	Action (R/W)	Size	Type	Unit	Range	Description
2023	W	1	UInt16	—	—	(Reserved)

Modbus register list

System

Address	Register	Action (R/W/ WC)	Size	Type	Units	Description
0x001D	30	R	20	UTF8	—	Meter Name
0x0031	50	R	20	UTF8	—	Meter Model
0x0045	70	R	20	UTF8	—	Manufacturer
0x0081	130	R	2	UInt32	—	Serial Number
0x0083	132	R	4	DATETIME	—	Date of Manufacture
0x0087	136	R	5	UTF8	—	Hardware Revision
0x0664	1637	R	1	UInt16	—	Present Firmware Version (DLF format): X.Y.ZTT
0x0734 – 0x0737	1845 – 1848	R/WC	1 X 4	UInt16	—	Date/Time: Reg. 1845: Year (b6:b0) 0 – 99 (year from 2000 to 2099) Reg. 1846: Month (b11:b8), Weekday (b7:b5), Day (b4:b0) Reg. 1847: Hour (b12:b8), Minute (b5:b0) Reg. 1848: Millisecond
0xAFC7	45000	R	1	Bitmap	—	Diagnostics error status 0 = Inactive 1 = Active Bit0 = Code 101 Bit1 = Code 102 Bit2 = Code 201 Bit3 = Code 202 Bit4 = Code 203 Bit5 = Code 204 Bit6 = Code 205 Bit7 = Code 206 Bit8 = Code 207

Meter Setup and Status

Address	Register	Action (R/W/WC)	Size	Type	Units	Description
0x07D3	2004	R	2	UInt32	Second	Meter Operation Timer **NOTE:** Not applicable for iEM3150 / iEM3250 / iEM3350
0x07DD	2014	R	1	UInt16	—	Number of Phases
0x07DE	2015	R	1	UInt16	—	Number of Wires
0x07DF	2016	R/WC	1	UInt16	—	Power System: 0 = 1PH2W L-N

Address	Register	Action (R/W/WC)	Size	Type	Units	Description
						1 = 1PH2W L-L 2 = 1PH3W L-L with N 3 = 3PH3W 11 = 3PH4W 13 = 1PH4W multi L with N
0x07E0	2017	R/WC	1	UInt16	Hz	Nominal Frequency
0x07E8	2025	R	1	UInt16	—	Number VTs **NOTE:** Not applicable for iEM3150 / iEM3155 / iEM3350 / iEM3355
0x07E9	2026	R/WC	2	Float32	V	VT Primary **NOTE:** Not applicable for iEM3150 / iEM3155 / iEM3350 / iEM3355
0x07EB	2028	R/WC	1	UInt16	V	VT Secondary **NOTE:** Not applicable for iEM3150 / iEM3155 / iEM3350 / iEM3355
0x07EC	2029	R/WC	1	UInt16	—	Number CTs **NOTE:** Not applicable for iEM3150 / iEM3155 / iEM3350 / iEM3355
0x07ED	2030	R/WC	1	UInt16	A	CT Primary **NOTE:** Not applicable for iEM3150 / iEM3155 / iEM3350 / iEM3355
0x07EE	2031	R/WC	1	UInt16	A	CT Secondary **NOTE:** Not applicable for iEM3150 / iEM3155 / iEM3350 / iEM3355
0x07F3	2036	R/WC	1	UInt16	—	VT Connection Type: 0 = Direct Connect 1 = 3PH3W (2 VTs) 2 = 3PH4W (3 VTs) **NOTE:** Not applicable for iEM3150 / iEM3155 / iEM3350 / iEM3355

Energy Pulse Output Setup (iEM3155 / iEM3255 / iEM3355)

Address	Register	Action (R/W/WC)	Size	Type	Units	Description
0x0850	2129	R/WC	1	UInt16	Millisecond	Energy Pulse Duration
0x0852	2131	R/WC	1	UInt16	—	Digital Output Association 0 = Disable 1 = DO1 enable for active energy pulse output
0x0853	2132	R/WC	2	Float32	pulse/kWh	Pulse Weight

Command Interface

Address	Register	Action (R/W/WC)	Size	Type	Units	Description
0x1481	5250	R/W	1	UInt16	—	Requested Command
0x1483	5252	R/W	1	UInt16	—	Command Parameter 001
0x14FD	5374	R/W	1	UInt16	—	Command Parameter 123
0x14FE	5375	R	1	UInt16	—	Command Status

Address	Register	Action (R/W/ WC)	Size	Type	Units	Description
0x14FF	5376	R	1	UInt16	—	Command Result codes: 0 = Valid Operation 3000 = Invalid Command 3001 = Invalid Parameter 3002 = Invalid Number of Parameters 3007 = Operation Not Performed
0x1500	5377	R/W	1	UInt16	—	Command Data 001
0x157A	5499	R	1	UInt16	—	Command Data 123

Communication

Address	Register	Action (R/W/ WC)	Size	Type	Units	Description
0x1963	6500	R	1	UInt16	—	Protocol 0 = Modbus
0x1964	6501	R/WC	1	UInt16	—	Address
0x1965	6502	R/WC	1	UInt16	—	Baud Rate: 0 = 9600 1 = 19200 2 = 38400
0x1966	6503	R/WC	1	UInt16	—	Parity: 0 = Even 1 = Odd 2 = None **NOTE:** Number of stop bits = 1

Input Metering Setup (iEM3155 / iEM3255 / iEM3355)

Address	Register	Action (R/W/ WC)	Size	Type	Units	Description
0x1B77	7032	R/WC	20	UTF8	—	Label
0x1B8B	7052	R/WC	2	Float32	pulse/unit	Pulse Constant
0x1B8E	7055	R/WC	1	UInt16	—	Digital Input Association: 0 = Disable for input metering 1 = Enable for input metering

Digital Input (iEM3155 / iEM3255 / iEM3355)

Address	Register	Action (R/W/ WC)	Size	Type	Units	Description
0x1C69	7274	R	1	UInt16	—	Digital Input Control Mode: 0 = Normal (Input Status) 2 = Multi Tariff Control 3 = Input Metering 5 = All Energy Reset
0x22C8	8906	R	2	Bitmap	—	Digital Input Status (only Bit 1 is used): Bit 1 = 0, relay open Bit 1 = 1, relay closed

Digital Output (iEM3155 / iEM3255 / iEM3355)

Address	Register	Action (R/W/ WC)	Size	Type	Units	Description
0x25C8	9673	R	1	UInt16	—	Digital Output Control Mode Status: 2 = Alarm 3 = Pulse (kWh) 6 = Pulse (kVARh) 0xFFFF = Disable

PF firmware updates (iEM3155 / iEM3255 / iEM3355)

Addition to PF Registers: Values ranging from +1 to -1

Address	Register	Action (R/W/ WC)	Size	Type	Units	Description
0x0C77	3192	R	2	Float32	—	Power Factor Total IEC
0x0C79	3194	R	2	Float32	—	Power Factor Total Lead Lag
0x0C7B	3196	R	1	UInt16	—	Power Factor Total IEC
0x0C7C	3197	R	1	UInt16	—	Power Factor Total Lead Lag

1PH4W Multi LN updates (iEM3155 / iEM3255 / iEM3355)

Addition of each phase reactive energy import register

Address	Register	Action (R/W/ WC)	Size	Type	Units	Description
0xB047	45128	R	2	Float32	kVARh	Reactive Energy Delivered Phase A
0xB049	45130	R	2	Float32	kVARh	Reactive Energy Delivered Phase B
0xB04B	45132	R	2	Float32	kVARh	Reactive Energy Delivered Phase C

You can access each phase reactive energy import values using INT64 or Float 32 register format.

Addition of each phase name register

Address	Register	Action (R/W/WC)	Size	Type	Units	Description	Default value
0xDEA7	57000	R	5	UTF8	—	Phase 1 Name	PH1 Eng Impt
0xDEAC	57005	R	5	UTF8	—	Phase 2 Name	PH2 Eng Impt
0xDEB1	57010	R	5	UTF8	—	Phase 3 Name	PH3 Eng Impt

Addition of one command to set the each phase name

Command Number	Action (R/W/WC)	Size	Type	Units	Range	Description
6018	W	1	UInt16	—	—	(Reserved)
	W	5	UTF8	—	String size ≤ 10	Phase 1 name Label
	W	5	UTF8	—	String size ≤ 10	Phase 2 name Label
	W	5	UTF8	—	String size ≤ 10	Phase 3 name Label

Addition to display: Each phase active/reactive values are added to HMI

NOTE: When the wiring configuration is 1PH4W Multi LN, the partial energy reset through Digital Input or Command is not possible.

Meter Data

Current, voltage, power, power factor and frequency

Address	Register	Action (R/W/WC)	Size	Type	Units	Description
Current						
0x0BB7	3000	R	2	Float32	A	I1: phase 1 current
0x0BB9	3002	R	2	Float32	A	I2: phase 2 current
0x0BBB	3004	R	2	Float32	A	I3: phase 3 current
0x0BBD	3006	R	2	Float32	A	In: Neutral current (available on iEM3555)
0x0BC1	3010	R	2	Float32	A	Current Avg
Voltage						
0x0BCB	3020	R	2	Float32	V	Voltage L1-L2
0x0BCD	3022	R	2	Float32	V	Voltage L2-L3
0x0BCF	3024	R	2	Float32	V	Voltage L3-L1
0x0BD1	3026	R	2	Float32	V	Voltage L-L Avg
0x0BD3	3028	R	2	Float32	V	Voltage L1-N
0x0BD5	3030	R	2	Float32	V	Voltage L2-N
0x0BD7	3032	R	2	Float32	V	Voltage L3-N
0x0BDB	3036	R	2	Float32	V	Voltage L-N Avg
Power						
0x0BED	3054	R	2	Float32	kW	Active Power Phase 1

Address	Register	Action (R/W/WC)	Size	Type	Units	Description
0x0BEF	3056	R	2	Float32	kW	Active Power Phase 2
0x0BF1	3058	R	2	Float32	kW	Active Power Phase 3
0x0BF3	3060	R	2	Float32	kW	Total Active Power
0x0BFB	3068	R	2	Float32	kVAR	Total Reactive Power **NOTE:** Not applicable for iEM3150 / iEM3250 / iEM3350
0x0C03	3076	R	2	Float32	kVA	Total Apparent Power **NOTE:** Not applicable for iEM3150 / iEM3250 / iEM3350
Power Factor						
0x0C0B	3084	R	2	Float32	—	Total Power Factor: -1 < PF < 0 = Quad 2, active power negative, capacitive -2 < PF < -1 = Quad 3, active power negative, inductive 0 < PF < 1 = Quad 1, active power positive, inductive 1 < PF < 2 = Quad 4, active power positive, capacitive
Frequency						
0x0C25	3110	R	2	Float32	Hz	Frequency

Energy, energy by tariff and input metering

Most energy values are available in both signed 64-bit integer and 32-bit floating point format.

The energy and energy by tariff measurements listed below are preserved through power failures.

Energy reset and active tariff information						
Address	**Register**	**Action (R/W/WC)**	**Size**	**Type**	**Units**	**Description**
0x0CB3	3252	R	4	DATETIME	—	Energy Reset Date and Time
0x0DE1	3554	R	4	DATETIME	—	Input Metering Accumulation Reset Date and Time **NOTE:** Not applicable for iEM3150 / iEM3250 / iEM3350
0x105E	4191	R/WC	1	UInt16	—	Multi Tariffs Energy Active Rate: 0: Multi Tariff disabled 1 to 4: rate A to rate D **NOTE:** You can only set the tariff using this method if the Tariff Mode is set to by Communication. **NOTE:** Not applicable for iEM3150 / iEM3250 / iEM3350

Energy values – 64-bit integer						
Address	**Register**	**Action (R/W/WC)**	**Size**	**Type**	**Units**	**Description**
Total Energy (cannot be reset)						
0x0C83	3204	R	4	Int64	Wh	Total Active Energy Import
0x0C87	3208	R	4	Int64	Wh	Total Active Energy Export

Energy values – 64-bit integer						
Address	**Register**	**Action (R/W/ WC)**	**Size**	**Type**	**Units**	**Description**
						NOTE: Not applicable for iEM3150 / iEM3250 / iEM3350
0x0C93	3220	R	4	Int64	VARh	Total Reactive Energy Import **NOTE:** Not applicable for iEM3150 / iEM3250 / iEM3350
0x0C97	3224	R	4	Int64	VARh	Total Reactive Energy Export **NOTE:** Not applicable for iEM3150 / iEM3250 / iEM3350
Partial Energy						
0x0CB7	3256	R	4	Int64	Wh	Partial Active Energy Import
0x0CC7	3272	R	4	Int64	VARh	Partial Reactive Energy Import **NOTE:** Not applicable for iEM3150 / iEM3250 / iEM3350
Phase Energy						
0x0DBD	3518	R	4	Int64	Wh	Active Energy Import Phase 1
0x0DC1	3522	R	4	Int64	Wh	Active Energy Import Phase 2
0x0DC5	3526	R	4	Int64	Wh	Active Energy Import Phase 3
Input Metering Counter						
0x0DE5	3558	R	4	Int64	Unit	Input Metering Accumulation **NOTE:** Not applicable for iEM3150 / iEM3250 / iEM3350
Energy by Tariff (iEM3155 / iEM3255 / iEM3355 only)						
0x1063	4196	R	4	Int64	Wh	Rate A Active Energy Import
0x1067	4200	R	4	Int64	Wh	Rate B Active Energy Import
0x106B	4204	R	4	Int64	Wh	Rate C Active Energy Import
0x106F	4208	R	4	Int64	Wh	Rate D Active Energy Import

Energy values – 32-bit floating point						
Address	**Register**	**Action (R/W/ WC)**	**Size**	**Type**	**Units**	**Description**
Total Energy (cannot be reset)						
0xB02B	45100	R	2	Float32	kWh	Total Active Energy Import
0xB02D	45102	R	2	Float32	kWh	Total Active Energy Export **NOTE:** Not applicable for iEM3150 / iEM3250 / iEM3350
0xB02F	45104	R	2	Float32	kVARh	Total Reactive Energy Import **NOTE:** Not applicable for iEM3150 / iEM3250 / iEM3350
0xB031	45106	R	2	Float32	kVARh	Total Reactive Energy Export **NOTE:** Not applicable for iEM3150 / iEM3250 / iEM3350
Partial Energy						
0xB033	45108	R	2	Float32	kWh	Partial Active Energy Import
0xB035	45110	R	2	Float32	kVARh	Partial Reactive Energy Import **NOTE:** Not applicable for iEM3150 / iEM3250 / iEM3350
Phase Energy						
0xB037	45112	R	2	Float32	kWh	Active Energy Import Phase 1

Energy values – 32-bit floating point						
Address	**Register**	**Action (R/W/ WC)**	**Size**	**Type**	**Units**	**Description**
0xB039	45114	R	2	Float32	kWh	Active Energy Import Phase 2
0xB03B	45116	R	2	Float32	kWh	Active Energy Import Phase 3
Input Metering Counter						
0xB03D	45118	R	2	Float32	Unit	Input Metering Accumulation **NOTE:** Not applicable for iEM3150 / iEM3250 / iEM3350
Energy by Tariff (iEM3155 / iEM3255 / iEM3355 only)						
0xB03F	45120	R	2	Float32	kWh	Rate A Active Energy Import
0xB041	45122	R	2	Float32	kWh	Rate B Active Energy Import
0xB043	45124	R	2	Float32	kWh	Rate C Active Energy Import
0xB045	45126	R	2	Float32	kWh	Rate D Active Energy Import

Overload Alarm (iEM3155 / iEM3255 / iEM3355)

Address	Register	Action (R/W/ WC)	Size	Type	Units	Description
0xAFC8	45001	R/WC	1	Bitmap	—	Overload Alarm Setup: 0x0000 = Disabled 0x0100 = Enabled
0xAFC9	45002	R/WC	2	Float32	kW	Pickup Setpoint
0xAFCB	45004	R/WC	1	Bitmap	—	Digital Output to Associate: 0x0000 = Digital Output unassociated to overload alarm 0x0100 = Digital Output associated to overload alarm
0xAFCC	45005	R	1	Bitmap	—	Activated Status: 0x0000 = Alarm is inactive 0x0100 = Alarm is active
0xAFCD	45006	R	1	Bitmap	—	Unacknowledged Status: 0x0000 = Historic alarm is acknowledged by the user 0x0100 = Historic alarm is unacknowledged by the user
0xAFCE	45007	R	4	DATETIME	—	Last Alarm - Time Stamp
0xAFD2	45011	R	2	Float32	kW	Last Alarm - Value

Read Device Identification

The meters supports the Read Device Identification function with the mandatory objects Vendor Name, Product Code, Firmware Revision, Vendor URL, Product Range, Product Model and User Application Name.

Object ID	Name / Description	Length	Value	Note
0x00	Vendor Name	20	Schneider Electric	—
0x01	Product Code	20	Commercial reference	The ProductCode value is identical to the catalog number of each device Ex: A9MEM3x55

Object ID	Name / Description	Length	Value	Note
0x02	Firmware Revision	06	XXX.YYY.ZZZ	—
0x03	Vendor URL	20	www.se.com	—
0x04	Product Range	20	iEM3000	—
0x05	Product Model	20	Product Model	Ex: A9MEM3x55
0x06	User Application Name	20	User configurable	Default = Product model

The Read Device ID codes 01, 02 and 04 are supported:

- 01 = request to get basic device identification (stream access)
- 02 = request to get regular device identification (stream access)
- 04 = request to get one specific identification object (individual access)

The Modbus request and response are compliant with the Modbus Application Protocol Specification.

Communications using LonWorks

LonWorks communications overview

LonWorks communications is available on iEM3175 / iEM3275 / iEM3375 meter models.

The information in this section assumes that you have an advanced understanding of LonWorks communications, your communications network and the power system that your device is connected to.

LonWorks communication implementation

External interface file (XIF)

The variables and configuration properties for the meter are documented in the external interface file (XIF). The XIF file is loaded onto the meter where your LNS (LonWorks Network Services) software can download it. You can also download the XIF file from www.se.com if you need to manually add the XIF file to your software.

The LonMaker plug-ins

The plug-ins allow you to configure the meter and view meter data in Echelon LonMaker.

LED indicators for LonWorks meters

The LonWorks meters have two LonWorks status LEDs: the red service LED and the green communications LED.

Red service LED

This LED provides the status of LonWorks operations.

LED state	Description
The LED is off	The meter is configured. It may be online or offline.
The LED is flashing	The meter is not configured but has an application.
The LED is on	• The meter is not configured and without an application, or • There is a defective internal memory issue.

Green communications LED

This LED provides the status of the meter's communications with the network.

LED state	Description
The LED is off	Communication is not active.
The LED is flashing	Communication is active.

Location of the service pin and Neuron ID

The service pin is located on the front panel. Press this when requested by your LNS software in order to identify the meter to your LonWorks network.

You can also find the Neuron ID on the meter label if you need to manually enter it into your LNS software.

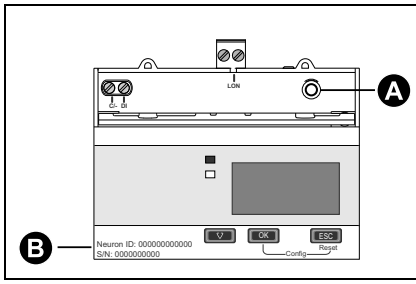

A	Service pin
B	Location of the Neuron ID on the front panel

Standard network variable types and configuration properties for reading data

The following sections outline the Standard Network Variable Types (SNVTs), the Standard Configuration Property Types (SCPTs), and User Configuration Property Types (UCPTs) that you can access to read data from the meter.

General variables

Network variable label	Type	Description
nviRequest	SCPTpartNumber	For LonWorks internal communication
nvoStatus	SCPToemType	For LonWorks internal communication

System variables

Network variable label	Type	Description
nvoFileDirectory	SNVT_address	Configuration parameter file directory address (LonMark)
nvoResponse	SNVT_count	Command result (LonMark)
nvoErrors	SNVT_state	Device error status Error bitmap: each bit of the bitmap provides error information about the device. If value of the bit = 1, that error is active. Bit0 = Code 101: EEPROM error Bit1 = Code 102: No calibration table Bit2 = Code 201: mismatch between frequency settings and frequency measurements Bit3 = Code 202: mismatch between wiring settings and wiring inputs Bit4 = Code 203: phase sequence reversed Bit5 = Not used Bit6 = Code 205: Date and time have been reset due to a power failure Bit7 = Not used Bit8 = Code 207: Abnormal internal clock function Bit9 = Internal data bus communications error Bit10 – 15: Not used
nciMeterModel	SNVT_str_asc (SCPTpartNumber)	Device model, stored as an ASCII string (for example, iEM3275)
nciMeterManf	SNVT_str_asc	Manufacturer name (Schneider Electric)

Network variable label	Type	Description
	(SCPToemType)	
nciSerialNumber	SNVT_str_asc (SCPTserialNumber)	Device serial number
nciManfDateTime	SNVT_time_stamp (SCPTmanfDate)	Date of manufacture
nciDevMajVer	SCPTdevMajVer	LonWorks firmware major version (for example, 2.xx) This variable functions with nciDevMinVer to provide the device's LonWorks firmware version
nciDevMinVer	SCPTdevMinVer	LonWorks firmware minor version (for example, x.34) This variable functions with nciDevMajVer to provide the device's LonWorks firmware version
nciMeterVersion	SNVT_str_asc (UCPTMeterVersion)	Device firmware version, stored as an ASCII text string

Energy and energy by tariff measurements

Most energy values are available in both signed 32-bit integer and floating point format. The SNVT is appended with _l for 32-bit integer values and _f for floating point values.

For example, the SNVTs for total active energy import are as follows:

- 32-bit integer: SNVT_elec_kwh_l
- Floating point: SNVT_elec_whr_f

The energy and energy by tariff measurements listed below are preserved through power failures.

Network variable label	Type	Description
nvoTotkWhImp	SNVT_elec_kwh_l	Total active energy import
nvoTotkWhExp	SNVT_elec_kwh_l	Total active energy export
nvoTotkVARhImp	SNVT_elec_kwh_l	Total reactive energy import
nvoTotkVARhExp	SNVT_elec_kwh_l	Total reactive energy export
nvoTotWhImp	SNVT_elec_whr_f	Total active energy import
nvoTotWhExp	SNVT_elec_whr_f	Total active energy export
nvoTotVARhImp	SNVT_elec_whr_f	Total reactive energy import
nvoTotVARhExp	SNVT_elec_whr_f	Total reactive energy export
nvoPartialkWh	SNVT_elec_kwh_l	Partial active energy import
nvoPartialkVARh	SNVT_elec_kwh_l	Partial reactive energy import
nvoPartialWh	SNVT_elec_whr_f	Partial active energy import
nvoPartialVARh	SNVT_elec_whr_f	Partial reactive energy import
nvoPh1kWh	SNVT_elec_kwh_l	Active energy import phase 1
nvoPh2kWh	SNVT_elec_kwh_l	Active energy import phase 2
nvoPh3kWh	SNVT_elec_kwh_l	Active energy import phase 3
nvoPh1Wh	SNVT_elec_whr_f	Active energy import phase 1
nvoPh2Wh	SNVT_elec_whr_f	Active energy import phase 2
nvoPh3Wh	SNVT_elec_whr_f	Active energy import phase 3
nvoTariffActRate	SNVT_count	Active tariff: 0 = Multi Tariff feature is disabled 1 = rate A (tariff 1) active

Network variable label	Type	Description
		2 = rate B (tariff 2) active 3 = rate C (tariff 3) active 4 = rate D (tariff 4) active
nvoTariffAkWh	SNVT_elec_kwh_l	Rate A (tariff 1) active energy import
nvoTariffBkWh	SNVT_elec_kwh_l	Rate B (tariff 2) active energy import
nvoTariffCkWh	SNVT_elec_kwh_l	Rate C (tariff 3) active energy import
nvoTariffDkWh	SNVT_elec_kwh_l	Rate D (tariff 4) active energy import
nvoTariffAWh	SNVT_elec_whr_f	Rate A (tariff 1) active energy import
nvoTariffBWh	SNVT_elec_whr_f	Rate B (tariff 2) active energy import
nvoTariffCWh	SNVT_elec_whr_f	Rate C (tariff 3) active energy import
nvoTariffDWh	SNVT_elec_whr_f	Rate D (tariff 4) active energy import
nvoInMeterAcc	SNVT_count_f	Input metering accumulation
nvoRstEnergyDT	SNVT_time_stamp	Date and time of last energy reset

Instantaneous (RMS) measurements

Network variable label	Type	Description
nvoActPowerPh1	SNVT_power_f	Active power Phase 1
nvoActPowerPh2	SNVT_power_f	Active power Phase 2
nvoActPowerPh3	SNVT_power_f	Active power Phase 3
nvoActPowerSum	SNVT_power_f	Total active power
nvoRctPowerSum	SNVT_power_f	Total reactive power
nvoAppPowerSum	SNVT_power_f	Total apparent power
nvoVoltsL1N	SNVT_volt_f	Voltage L1-N
nvoVoltsL2N	SNVT_volt_f	Voltage L2-N
nvoVoltsL3N	SNVT_volt_f	Voltage L3-N
nvoVoltsLNAvg	SNVT_volt_f	Average voltage line-to-neutral
nvoVoltsL1L2	SNVT_volt_f	Voltage L1-L2
nvoVoltsL2L3	SNVT_volt_f	Voltage L2-L3
nvoVoltsL3L1	SNVT_volt_f	Voltage L3-L1
nvoVoltsLLAvg	SNVT_volt_f	Average voltage line-to-line
nvoCurrentPh1	SNVT_amp_f	Phase 1 current
nvoCurrentPh2	SNVT_amp_f	Phase 2 current
nvoCurrentPh3	SNVT_amp_f	Phase 3 current
nvoCurrentAvg	SNVT_amp_f	Average current
nvoAvgPwrFactor	SNVT_count_inc_f	Total power factor
nvoFrequency	SNVT_freq_f	Frequency

Meter status information

You can read the following network variables to obtain configuration and status information about the meter. For information on configuring the meter, see the sections on meter configuration properties and the LonWorks plug-in.

Network variable label	SNVT / UCPT type	Description
Basic information and meter configuration		
nvoDateTime	SNVT_time_stamp	Meter date and time (DD/MM/YYYY hh:mm:ss)
nvoOpTimer	SNVT_count_32	Meter operation timer: the time in seconds since the meter was last powered up
System configuration information		
nciSystemType	SNVT_count	Power system configuration: 0 = 1PH2W L-N 1 = 1PH2W L-L 2 = 1PH3W L-L with N 3 = 3PH3W 11 = 3PH4W 13 = 1PH4 wire multi L-N
nciWireNum	SNVT_count	Number of wires 2, 3, 4
nciPhaseNum	SNVT_count	Number of phases 1, 3
nciCtNum	SNVT_count	Number of CTs 1, 2, 3 **NOTE:** Applicable only for iEM3275
nciVtNum	SNVT_count	Number of VTs 0 – 10 **NOTE:** Applicable only for iEM3275
nciVtPrimary	SNVT_count_32	VT Primary **NOTE:** Applicable only for iEM3275
nciVTSecondary	SNVT_count	VT Secondary **NOTE:** Applicable only for iEM3275
nciCtPrimary	SNVT_count	CT Primary **NOTE:** Applicable only for iEM3275
nciCtSecondary	SNVT_count	CT Secondary **NOTE:** Applicable only for iEM3275
nciVtConnType	SNVT_count	VT connection type: 0 = Direct connection, no VTs 1 = 3PH3W (2VTs) 2 = 3PH4W (3VTs)
nciNominalFreq	SNVT_freq_hz	System frequency 50, 60
Digital input configuration and status information		
nciDICtrMode	SNVT_count	Digital input control mode: 0 = Normal (input status) 2 = Multi Tariff control 3 = Input metering 5 = All partial energy reset (configure to reset all partial energy logs)
nciDIPulseConst	SNVT_count_32	Pulse constant (pulses/unit)
nvoDIStatus	SNVT_count	Digital input status (only Bit 1 is used): 0 = relay open 1 = relay closed **NOTE:** The information provided by this variable only applies if the digital input control mode is set to Input Status.
Alarm status		
nvoAlmStatus	SNVT_count	Alarm status (only Bit 1 is used): 0 = Alarm is inactive

Network variable label	SNVT / UCPT type	Description
		1 = Alarm is active
nvoAlmUnAckState	SNVT_count	Acknowledgement status (only Bit 1 is used): 0 = historic alarm is acknowledged by the user 1 = historic alarm is unacknowledged by the user
nvoAlmLastTime	SNVT_time_stamp	Timestamp of last alarm (DD/MM/YYYY hh:mm:ss)
nvoAlmLastValue	SNVT_power_f	Value at last alarm
nciAlmEnable	SNVT_count	Overload alarm configuration: 0 = disabled 1 = enabled
nciAlmPkUpSetPt	SNVT_power_f	Active power alarm pickup setpoint in kW

Resets

Network variable label	Type	Description	Action
nciRstPartEnergy	SNVT_switch	Resets all partial energy accumulators to 0: Partial active energy import (nvoPartialkWh, nvoPartialWh) Partial reactive energy import (nvoPartialkVARh, nvoPartialVARh) Rate A active energy import (nvoTariffAkWh, nvoTariffAWh) Rate B active energy import (nvoTariffBkWh, nvoTariffBWh) Rate C active energy import (nvoTariffCkWh, nvoTariffCWh) Rate D active energy import (nvoTariffDkWh, nvoTariffDWh) Active energy import phase 1 (nvoPh1kWh, nvoPh1Wh) Active energy import phase 2 (nvoPh2kWh, nvoPh2Wh) Active energy import phase 3 (nvoPh3kWh, nvoPh3Wh)	To reset, set the state field to 1.
nciRstInMeterAcc	SNVT_switch	Resets input metering accumulation (nvoInMeterAcc) to 0	To reset, set the state field to 1.

Meter configuration properties

You can configure the meter using the configuration properties listed in this section. However, it is recommended that you use the Echelon LonMaker plug-in if you are configuring the meter using LonWorks communications.

NOTE: If Com. Protection is enabled, you may receive an error response when you try to configure the meter over communications.

Date/time setup

Function profile	UCPT	Struct Members	Range / Options
nciCfgDateTime	UCPTDateTime	year	2000 – 2099
		month	1 – 12
		day	1 – 31
		hour	0 – 23
		minute	0 – 59

Function profile	UCPT	Struct Members	Range / Options
		second	0 – 59

Basic setup

Function profile	UCPT	Struct Members	Range / Options	Description
nciCfgWiring	UCPTWiring	SystemType	0, 1, 2, 3, 11, 13	Power system configuration: 0 = 1PH2W L-N 1 = 1PH2W L-L 2 = 1PH3W L-L with N 3 = 3PH3W 11 = 3PH4W 13 = 1PH4 wire multi L with N
		NominFreq	50, 60	Nominal frequency in Hz
		VtPrimary	0 to 1000000.0	VT primary The minimum value for VtPrimary must be equal to or greater than the value set for VtSecondary **NOTE:** Applicable only for iEM3275
		VtSecondary	100, 110, 115, 120	VT secondary **NOTE:** Applicable only for iEM3275
		CtNum	1, 2, 3	Number of CTs **NOTE:** Applicable only for iEM3275
		CtPrimary	1 to 32767	CT primary **NOTE:** Applicable only for iEM3275
		CtSecondary	1, 5	CT secondary **NOTE:** Applicable only for iEM3275
		VtConnType	0, 1, 2	VT connection type: 0 = Direct connection 1 = 3PH3W (2VTs) 2 = 3PH4W (3VTs) **NOTE:** Applicable only for iEM3275

Digital input setup

Function profile	UCPT	Struct Members	Range / Options	Description
nciCfgDigitInpt	UCPTDigitalInput	—	0, 1	Associates the digital input to reset partial energy data: 0 = Digital input is not associated with the partial energy reset. 1 = Digital input is associated with the partial energy reset. Setting this property to 1 also updates nciDICtrlMode (UCPTDiCtrlMode) to All Energy Reset

Input metering setup

Function profile	UCPT	Struct Members	Range / Options	Description
nciCfgInptMetAcc	UCPTInputMetering	PulseWeight	1 – 10000	Sets the pulse weight (1 – 10000 ms) Setting this property also sets nciDIPulseConst (UCPTDiPulseConst) to the same value.
		DigitalAssociation	0, 1	Associates the digital input with input metering: 0 = Digital input is not associated with input metering 1 = The digital input is associated with input metering Setting this property to 1 also updates nciDICtrlMode (UCPTDiCtrlMode) to Input Metering.

Overload alarm setup

Function profile	UCPT	Struct Members	Range / Options	Description
nciCfgOvLoadAlm	UCPTOverLoadAlarm	AlmEnable	0, 1	Enable or disable the overload alarm: 0 = Disabled 1 = Enabled
		PkUpSetpoint	1 – 9999999	The pickup value for the overload alarm
nciCfgOvLoadAck	UCPTOverLoadAlmAck	—	0, 1	Acknowledgement status (only Bit 1 is used): 0 = historic alarm is acknowledged by the user 1 = historic alarm is unacknowledged by the user

Multi Tariff setup

Function profile	UCPT	Struct Members	Range / Options	Description
nciCfgCommTariff	UCPTTariffMode	—	0, 1	Set Multi Tariff control mode to Disabled or by Communication 0 = Disabled 1 = by Communication **NOTE:** To configure the Multi Tariff feature to be controlled by the digital input or device clock, use the HMI.
nciCfgTariffSel	UCPTTariffSelect	—	1, 2, 3, 4	Set the active tariff 1 = Rate A (tariff 1) 2 = Rate B (tariff 2) 3 = Rate C (tariff 3) 4 = Rate D (tariff 4) **NOTE:** You can only set the tariff using this method if the Tariff Mode is set to by Communication.

Network propagation rate setup

The following configuration properties help control network traffic by controlling the rate at which variable values are sent to your LNS.

nci variable	UCPTs / SCPTs	Applies to...	Description
nciMaxNvSntPerSec	UCPTNVUpdtLimit	• nciErrors • nciAllEnergy • nciAllPower • nciAllVoltage • nciAllCurrent • nciAllPowerFactor • nciFrequency.	Limits the total number of updates sent per second for listed nci variables. If more than the specified number of updates are queued to be sent out in any 1 second period, the excess updates are delayed until the next second to reduce network traffic. The number of updates sent per second varies depending on the connection type updates from network variables that are not controlled by this configuration property.
nciErrors	SCPTmaxSendTime	nvoErrors	Maximum interval, in seconds, between transmissions of error values to the network. The value of the applicable variable is sent after the interval has elapsed, regardless of whether or not the value of the variable has changed. The counter is reset to 0.
nciAllEnergy	SCPTminSendTime	Floating-point energy values: • nvoTotWhImp • nvoTotWhExp • nvoTotVARhImp • nvoTotVARhExp • nvoPartialWh • nvoPartialVARh • nvoPh1Wh • nvoPh2Wh • nvoPh3Wh • nvoTariffAWh • nvoTariffBWh • nvoTariffCWh • nvoTariffDWh	The minimum interval, in seconds, between consecutive transmissions of the listed variable values to the network. No updates to the value of the applicable variables are sent over the network until the minimum interval has elapsed, regardless of whether or not the value of the variable has changed. After an update is sent, the counter is reset to 0.
nciAllPower	SCPTminSendTime	• nvoActPowerPh1 • nvoActPowerPh2 • nvoActPowerPh3 • nvoActPower-Sum • nvoRctPower-Sum • nvoAppPower-Sum	
nciAllVoltage	SCPTminSendTime	• nvoVoltsL1N • nvoVoltsL2N • nvoVoltsL3N • nvoVoltsLNAvg • nvoVoltsL1L2 • nvoVoltsL2L3 • nvoVoltsL3L1 • nvoVoltsLLAvg	
nciAllCurrent	SCPTminSendTime	• nvoCurrentPh1 • nvoCurrentPh2 • nvoCurrentPh3 • nvoCurrentAvg	
nciAllPowerFactor	SCPTminSendTime	nvoAvgPwrFactor	
nciFrequency	SCPTminSendTime	nvoFrequency	

Echelon LonMaker plug-in for data display and meter configuration

The information in this section assumes that you have an advanced understanding of system administration using Echelon LonMaker.

The LonMaker plug-in provides a graphical user interface where you can view meter values and configure meter settings. Once you install and register the plug-in with LonMaker, it opens instead of the default LonMaker browser when you browse the meter in LonMaker.

To add devices to LonMaker, you need access to the device service pin when commissioning the device or your need the device Neuron ID recorded in an accessible location.

Installing and registering the LonMaker plug-in

Before you install the plug-in:

- Download the plug-in and XIF file for your device from www.se.com or contact your sales representative to obtain these files.
- Make sure Echelon LonMaker is closed.

1. Navigate to the location where you saved the plug-in. Extract the files if they are in a .zip file.
2. Double-click setup.exe. A welcome screen appears. Click **Next**.
3. Select the installation folder where you want to install the plug-in. Click **Browse** if you want to select a different location. Click **Next**. A confirmation screen appears.
4. Click **Next** to begin the installation.

   NOTE: If LonMaker is open, a message appears instructing you to close LonMaker and restart the plug-in installation.

   A screen appears when the installation is complete. Click **Close**.
5. Navigate to **Start > Programs > Schneider Electric** and select the registration entry for the plug-in you installed (for example, **Schneider Electric iEM3275 Plugin Registration**). The **LNS Plugin Registration** dialog box appears, indicating that registration is complete.

   Make sure that the plug-in appears in the list of registered plug-ins in LonMaker before you try to connect to a meter using the plug-in. If it does not appear, you may need to re-register the plug-in.

   Once the plug-in is installed and registered, add the meter to LonMaker. You can either read the template (.XIF) from the device during commissioning or select the EnergyMeter5A or EnergyMeter63A template when you add the device to LonMaker.

Browsing the meter using the LonMaker plug-in

In order to use the plug-in to view data and configure the meter:

- The plug-in must be installed and registered.
- The meter must be added to LonMaker and commissioned.

1. Open LonMaker.
2. Right-click the meter icon and select **Browse**. The meter plug-in appears.

   NOTE: If the meter-specific plug-in does not open, the plug-in may not be correctly registered or the meter may not be properly commissioned in LonMaker. Double-check the registration and meter commissioning. Refer to the Echelon LonMaker documentation for more information.

LonMaker plug-in interface

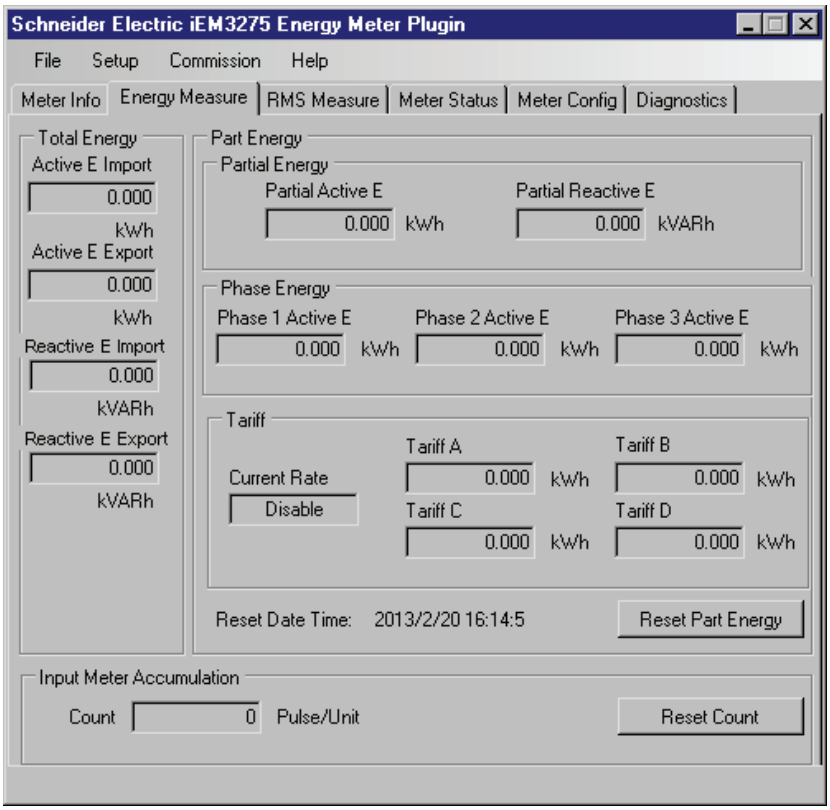

The plug-in has the following tabs:

Tab name	Description
Meter Info	This tab provides basic information about the meter (for example, model and serial number) and any active error codes.
Energy Measure	This tab provides total and partial energy values as well as energy per phase and energy by tariff information. You can also reset energy and input metering accumulations on this tab.
RMS Measure	This tab provides power, current, and voltage values as well as frequency and power factor information.
Meter Status	This tab provides information on the settings and status of the digital input and alarms as well as existing power system settings.
Meter Config	This tab provides access to the meter configuration properties, allowing you to configure power system, digital input, alarm, Multi Tariff and time settings. **NOTE:** If you see a message that the configuration was unsuccessful, make sure: 1) the meter is properly commissioned in LonMaker and the plug-in is communicating with the meter, and 2) that Com. Protection is disabled on the meter.
Diagnostics	This tab provides LonMaker diagnostics information related to the meter.

Communications using M-Bus

M-Bus communications overview

Communications using M-Bus protocol is available on iEM3135 / iEM3235 / iEM3335 meter models.

M-Bus is a master / slave communications protocol where the master initiates transactions and the slave(s) respond with the requested information or action. Data is transferred using hexadecimal telegrams.

The information in this section is intended for users with an advanced understanding of M-Bus protocol, their communications network and their power system.

Configuring basic communications settings

Before communicating with the meter using M-Bus protocol, use the HMI to configure the following settings:

Setting	Possible values
Baud rate	300 600 1200 2400 4800 9600
Primary address	1 – 250

NOTE: For M-Bus communication, the device consumes 2 standard loads (2 Unit Loads or 2UL).

Key terms

Term	Definition
C-Field	The control or function field of the telegram. It provides information about the telegram, such as the direction of data flow (master to slave or slave to master), the status of the data flow and the function of the message.
CI-Field	The control information field of the telegram. It defines the type and sequence of data to be transmitted.
Fixed data header	Contains device and manufacturer identification information.
DIF	Data information field. The DIF contains information about the function of the data (for example, instantaneous versus maximum) and the data format (for example, 16-bit integer).
DIFE	Data information field extension. A DIFE contain additional information about the data, such as tariff and subunit.
Master	A device that issues commands and receives responses from slave devices. There can be only one master per serial network.
Slave	A device that provides information or performs actions in response to requests from the master.
VIF / VIFE	Value information field and value information field extension. The VIF and VIFE contain information about the value (for example, whether it is an energy or power value). The meter uses both primary VIFE (as detailed in the M-Bus protocol documentation) and manufacturer-specific VIFE.

M-Bus protocol support

The meter supports the M-Bus protocol as follows:

- Mode 1 communications (least significant bit first).
- Telegram formats:
  - Single character
  - Short frame
  - Long frame
- Function codes (C-field bits 3-0):
  - SND_NKE: Initiates of communications between the master and slave.
  - SND_UD: The master sends user data to the slave.
  - REQ_UD2: The master requests Class 2 user data from the slave.
  - RSP_UD: The slave sends requested data to the master.
- Secondary addressing in accordance with the M-Bus standard.
- Broadcast telegrams.

M-Bus protocol implementation

M-Bus tool for viewing data and configuring the meter

The M-Bus tool provides a graphical user interface where you can view meter data and configure meter settings. To obtain the tool, go to www.se.com and search for your meter model then select Downloads or contact your local Schneider Electric representative.

Communications LED indicator for M-Bus meters

The communications LED indicates the status of the communications between the meter and the network as follows:

LED state	Description
The LED is flashing	Communication with the meter has been established. **NOTE:** The LED flashes even if there is a communications error.
The LED is off	There is no active communication.

Variable data structure telegram information

Fixed data header

Byte 1 – 4 Identification No.	Byte 5 – 6 Manufacturer	Byte 7 Version	Byte 8 Medium	Byte 9 Access No.	Byte 8 Status	Byte 11 – 12 Signature
Serial number of the meter in an 8-digit, BCD coded format The serial number can also be found on the meter front panel	4CA3 hex = Schneider Electric	Firmware version of the communications board 10 = version 1.0	02 hex (electricity)	Counter of successful access attempts	Indicates M-Bus application errors	Not used

Decoding secondary address and M-Bus serial number

Each M-Bus meter has a unique secondary address. The secondary address of a meter includes 4 parts: serial number, M-Bus firmware version, medium, and manufacturer.

The format of the secondary address is **SSSSSSSSMAVVME**. The decoding of the secondary address is given below:

SSSSSSSS: Serial Number

MA: Manufacturer

VV: M-Bus Firmware Version

ME: Medium

Common Medium list:

01 = Oil

02 = Electricity

03 = Gas

04 = Heat

The main board serial number format is **YYWWDNNN**. The decoding of the M-Bus serial number is given below followed with an example:

YY: Year

WW: Week

D: Day

NNN: Number

The following example distinguishes the M-Bus serial number for iEM3135 / iEM3235 / iEM3335 meters.

Main Board SN	M-Bus SN		
	iEM3135	iEM3235	iEM3335
14053100 YY	01053100 YY-13	31053100 YY+17	61053100 YY+47

Data record header information

Data formats used by the meter (DIF bits 3 – 0)

NOTE: x in the hex value is determined by bits 7 – 4 of the DIF.

Format	bin	hex
No data	0000	x0
8-bit integer	0001	x1
16-bit integer	0010	x2
24-bit integer	0011	x3
32-bit integer	0100	x4
32-bit real	0101	x5
48-bit integer	0110	x6
64-bit integer	0111	x7
Variable length	1101	xD

Data function types used by the meter (DIF bits 5 – 4)

Function type	bin
Instantaneous	00
Maximum	01

Primary VIF used by the meter

NOTE: E denotes the extension bit; x in the hex value is determined by bits 7 – 4 of the VIF.

Primary VIF	bin	hex	Description
Energy	E000 0011	x3	Wh with a resolution of 10^0 in int64 kWh with a resolution of 10^3 in float32
Power	E000 1110	xE	kW with a resolution of 10^3
Time point	E110 1101	xD	Date and time in data type F, as detailed in the M-Bus protocol documentation
Bus address	E111 1010	xA	Data type C (unsigned integer), as detailed in the M-Bus protocol documentation
Primary VIFE	1111 1101	FD	Indicates that the first VIFE is a primary VIF extension
Manufacturer-specific VIFE	1111 1111	FF	Indicates that the next VIFE is manufacturer specific

Primary VIFE codes used by the meter

The primary VIFE codes in the table below are used by the meter when the VIF equals FD hex (1111 1101 bin).

NOTE: E denotes the extension bit; x in the hex value is determined by bits 7-4 of the VIFE.

Primary VIFE codes	bin	hex	Additional information
Manufacturer	E000 1010	xA	—
Model	E000 1100	xC	—
Voltage	E100 1001	x9	Volts with a resolution of 10^0
Current	E101 1100	xC	Amps with a resolution of 10^0
Digital output	E001 1010	xA	—
Digital input	E001 1011	xB	—
Cumulation counter	E110 0001	x1	Input metering accumulation
Error flag	E001 0111	x7	—

Manufacturer-specific VIFE codes

The manufacturer-specific VIFE codes in the table below are used by the meter when the VIF equals FF hex (1111 1111 bin).

NOTE: E denotes the extension bit; the hex value assumes E = 0.

Description	bin	hex
L1 value	E000 0001	01
L2 value	E000 0010	02
L3 value	E000 0011	03
Export energy value	E000 1001	09
Partial energy value	E000 1101	0D
Average current	E000 0000	00
L-N Avg	E000 0100	04
L1-L2	E000 0101	05
L2-L3	E000 0110	06
L3-L1	E000 0111	07
L-L Avg	E000 1000	08
Power Factor	E000 1010	0A
Frequency	E000 1011	0B
Energy reset date and time	E000 1100	0C
Input metering reset date and time	E000 1110	0E
Input metering accumulation	E000 1111	0F
Active tariff (Energy active rate)	E001 0000	10
Tariff control mode	E001 0001	11
Meter operation timer	E010 0000	20
Number of phases	E010 0001	21
Number of wires	E010 0010	22
Power system configuration	E010 0011	23
Nominal frequency	E010 0100	24
Number of VTs	E010 0101	25
VT primary	E010 0110	26
VT secondary	E010 0111	27
Number of CTs	E010 1000	28
CT Primary	E010 1001	29

Description	bin	hex
CT Secondary	E010 1010	2A
VT connection type	E010 1011	2B
Energy pulse duration	E010 1100	2C
Digital output association with active energy pulsing	E010 1101	2D
Pulse weight	E010 1110	2E
Pulse constant	E010 1111	2F
Digital input association	E011 0000	30
Digital input status	E011 0010	32
Overload alarm setup	E011 0100	34
Pickup setpoint	E011 0101	35
Digital output association with overload alarm	E011 0110	36
Activated status	E011 0111	37
Acknowledgment	E011 1000	38
Date and time of last alarm	E011 1001	39
Value at last alarm	E011 1010	3A

Telegram information for data records

The following sections outline the telegram information used in data records. The tables contain the following information (if applicable):

- Data format in hex (for example, 16-bit integer)
- Primary VIF in hex
- Primary VIFE codes in bin and hex
- Manufacturer-specific VIFE codes in bin and hex

Meter information

NOTE: E denotes the extension bit; the hex value assumes E = 0.

Data format	Primary VIF Extension		Description
	bin	hex	
0D	E000 1010	0A	Manufacturer 18-bit ASCII = Schneider Electric
0D	E000 1100	0C	Model
0D	E000 1110	0E	Firmware version
03	E0001 0111	17	Meter error codes: 0 = Code 101: EEPROM error 1 = Code 102: No calibration table 2 = Code 201: Mismatch between frequency settings and frequency measurements 3 = Code 202: Mismatch between wiring settings and wiring inputs 4 = Code 203: Phase sequence reversed 5 = Code 204: Total active energy negative due to incorrect voltage or current connections 6 = Code 205: Date and time are reset due to a power failure 7 = Code 206: Pulse missing due to overspeed of energy pulse output 8 = Code 207: Abnormal internal clock function 9 = Internal data bus communications error

Energy and energy by tariff measurements (INT64 and FLOAT32)

The energy and energy by tariff measurements listed below are preserved through power failures. An addition of energy values in FLOAT32 format have been provided with the existing 64-bit registers.

NOTE: E denotes the extension bit; the hex value assumes E = 0.

Data format	DIFE	Primary VIF	Primary VIFE		Manufacturer-specific VIFE		Description
			bin	hex	bin	hex	
INT64							
07	—	03	—	—	—	—	Total active energy import
07	—	83	—	—	E000 1001	09	Total active energy export
87	40	03	—	—		—	Total reactive energy import
87	40	83	—	—	E000 1001	09	Total reactive energy export
07	—	83	—	—	E000 1101	0D	Partial active energy import
87	40	83	—	—	E000 1101	0D	Partial reactive energy import
07	—	83	—	—	E000 0001	01	Active energy import phase 1
07	—	83	—	—	E000 0010	02	Active energy import phase 2
07	—	83	—	—	E000 0011	03	Active energy import phase 3
03	—	—	—	—	E001 0000	10	Active tariff 0 = Multi Tariff feature is disabled 1 = rate A (tariff 1) active 2 = rate B (tariff 2) active 3 = rate C (tariff 3) active 4 = rate D (tariff 4) active
87	10	03	—	—	—	—	Rate A (tariff 1) active energy import
87	20	03	—	—	—	—	Rate B (tariff 2) active energy import
87	30	03	—	—	—	—	Rate C (tariff 3) active energy import
87	80 10	03	—	—	—	—	Rate D (tariff 4) active energy import
07	—	—	E110 0001	61	—	—	Input metering accumulation
04	—	ED	—	—	E000 1100	0C	Date and time of last partial energy reset
04	—	ED	—	—	E000 1110	0E	Date and time of last input metering reset
FLOAT32							
05	—	03	—	—	—	—	Total active energy import
05	—	83	—	—	E000 1001	09	Total active energy export
85	40	83	—	—	—	—	Total reactive energy import
85	40	83	—	—	E000 1001	09	Total reactive energy export
05	—	83	—	—	E000 1101	0D	Partial active energy import
85	40	83	—	—	E000 1101	0D	Partial reactive energy import
05	—	83	—	—	E000 0001	01	Active energy import phase 1
05	—	83	—	—	E000 0010	02	Active energy import phase 2
05	—	83	—	—	E000 0011	03	Active energy import phase 3
85	10	03	—	—	—	—	Rate A (tariff 1) active energy import
85	20	03	—	—	—	—	Rate B (tariff 2) active energy import
85	30	03	—	—	—	—	Rate C (tariff 3) active energy import

Data format	DIFE	Primary VIF	Primary VIFE		Manufacturer-specific VIFE		Description
			bin	hex	bin	hex	
85	80 10	03	—		—	—	Rate D (tariff 4) active energy import
05	—	—	E110 0001	61	—	—	Input metering accumulation

NOTE: The unit of FLOAT32 energy value is kWh/kVARh.

Instantaneous measurements

NOTE: E denotes the extension bit; the hex value assumes E = 0.

Data format	DIFE	Primary VIF	Primary VIFE		Manufacturer-specific VIFE		Description
			bin	hex	bin	hex	
05	—	AE	—	—	E000 0001	01	Active power Phase 1
05	—	AE	—	—	E000 0010	02	Active power Phase 2
05	—	AE	—	—	E000 0011	03	Active power Phase 3
05	—	2E	—	—	—	—	Total active power
85	40	2E	—	—	—	—	Total reactive power
85	80 40	2E	—	—	—	—	Total apparent power
05	—	—	E100 1001	C9	E000 0001	01	Voltage L1-N
05	—	—	E100 1001	C9	E000 0010	02	Voltage L2-N
05	—	—	E100 1001	C9	E000 0011	03	Voltage L3-N
05	—	—	E100 1001	C9	E000 0100	04	Average voltage line-to-neutral
05	—	—	E100 1001	C9	E000 0101	05	Voltage L1-L2
05	—	—	E100 1001	C9	E000 0110	06	Voltage L2-L3
05	—	—	E100 1001	C9	E000 0111	07	Voltage L3-L1
05	—	—	E100 1001	C9	E000 1000	08	Average voltage line-to-line
05	—	—	E101 1100	DC	E000 0001	01	Phase 1 current
05	—	—	E101 1100	DC	E000 0010	02	Phase 2 current
05	—	—	E101 1100	DC	E000 0011	03	Phase 3 current
05	—	—	E101 1100	DC	E000 0000	00	Average current
05	—	—	—	—	E000 1010	0A	Total power factor
05	—	—	—	—	E000 1011	0B	Frequency

Meter status information

Use the following information to read system and status information from the meter. See the section regarding telegram information for meter configuration for more information on writing to the meter.

Date and time information

NOTE: E denotes the extension bit; the hex value assumes E = 0.

Data format	Primary VIF	Manufacturer specific VIFE		Description
		bin	hex	
04	6D	—	—	Meter date and time (DD/MM/YYYY hh:mm:ss)
06	—	E010 0000	20	Meter operation timer: the time in seconds since the device was last powered up

Power system configuration information

NOTE: E denotes the extension bit; the hex value assumes E = 0.

Data format	Manufacturer specific VIFE		Description
	bin	hex	
03	E010 0011	23	Power system configuration: 0 = 1PH2W L-N 1 = 1PH2W L-L 2 = 1PH3W L-L with N 3 = 3PH3W 11 = 3PH4W 13 = 1PH4 wire multi L with N
03	E010 0010	22	Number of wires 2, 3, 4
03	E010 0001	21	Number of phases 1, 3
03	E010 1000	29	Number of CTs 1, 2, 3 **NOTE:** Applicable only for iEM3235
03	E010 0101	25	Number of VTs 0 to 10 **NOTE:** Applicable only for iEM3235
03	E010 0110	26	VT Primary **NOTE:** Applicable only for iEM3235
03	E010 0111	27	VT Secondary **NOTE:** Applicable only for iEM3235
03	E010 1001	29	CT Primary **NOTE:** Applicable only for iEM3235
03	E010 1010	2A	CT Secondary **NOTE:** Applicable only for iEM3235
03	E010 1011	2B	VT connection type: 0 = Direct connection, no VTs 1 = 3PH3W (2VTs) 2 = 3PH4W (3VTs)
03	E010 0100	24	Nominal frequency 50, 60

Digital input and output status information

NOTE: E denotes the extension bit; the hex value assumes E = 0.

Data format	Primary VIFE		Manufacturer specific VIFE		Description
	bin	hex	bin	hex	
03	E001 1011	1B	—	—	Digital input control mode: 0 = Normal (Input Status) 2 = Multi Tariff control 3 = Input metering 5 = All partial energy logs reset
05	—	—	E010 1111	2F	Pulse constant (pulses/unit)
02	—	—	E011 0010	32	Digital input status: 0 = relay open 1 = relay closed **NOTE:** This information only applies if the digital input control mode is set to Input Status.
03	—	—	E011 0000	30	Digital input association with partial energy data reset 0 = Digital input is not associated with the partial energy reset 1 = Digital input is associated with the partial energy reset
03	—	—	E010 1100	2C	Energy pulse duration in milliseconds **NOTE:** This information only applies if the digital output mode is set to energy pulsing.
05	—	—	E010 1110	2E	Pulse weight of the digital output **NOTE:** This information only applies if the digital output mode is set to energy pulsing.
03	E001 1010	1A	—	—	Digital output control mode 2 = for Alarm 3 = for Pulse (kWh) 0xFFFF = Disabled
03	—	—	E010 1101	2D	Digital output association with energy pulsing: 0 = Digital output disabled 1 = for Pulse (digital output is associated with active energy pulse output)
02	—	—	E011 0110	36	Digital output association with overload alarm: 0x0000 = digital output disabled 0x0100 = for Alarm (digital output is associated with the overload alarm)

Alarm status information

NOTE: E denotes the extension bit; the hex value assumes E = 0.

Data format	Primary VIF	Manufacturer specific VIFE		Description
		bin	hex	
02	—	E011 0111	37	Alarm status: 0x0000 = Alarm is inactive 0x0100 = Alarm is active
02	—	E011 1000	38	Acknowledgement status: 0x0000 = historic alarm is acknowledged by the user 0x0100 = historic alarm is unacknowledged by the user
04	ED	E011 1001	39	Timestamp of last alarm (DD/MM/YYYY hh:mm:ss)
05	—	E011 1010	3A	Value at last alarm
02	—	E011 0100	34	Overload alarm configuration: 0x0000 = disabled 0x0100 = enabled
05	—	E011 0101	35	The pickup setpoint in kW for the overload alarm

Telegram decode information (all values are in hexadecimal)

1st telegram information

Byte No	Size	Value	Description
1	1	68	Start character
2	1	F4	L-field, calculated from C field to last user data
3	1	F4	L-field, repeated
4	1	68	Start character
5	1	08	C-field, RSP_UD
6	1	XX	A-field, address
7	1	72	CI-field, variable data respond, LSB first
8 – 11	4	XXXX	Identification number, 8 BCD digits
12 – 13	2	4CA3	Manufacturer: SCH
14	1	00	Version
15	1	02	Medium, 02 = Electricity
16	1	X	Number of accesses
17	1	X	Status
18 – 19	2	0000	Signature (0000 = no encryption)
20	1	0D	DIF size, special function
21	1	FD	VIF extension of VIF-codes
22	1	0A	Manufacturer name
23	1	12	String length
24 – 41	18	XXXXXXXXXXXXXX-XXXX	Schneider Electric
42	1	0D	DIF size, special function
43	1	0D	VIF extension of VIF-codes
44	1	FD	Model
45 – 53	9	0C	Meter model
54	1	XXXXXXXXX	DIF size, special function
55	1	0D	VIF extension of VIF-codes
56	1	FD	Firmware version
57 – 64	8	0E	Meter Firmware version
65	1	XXXXXXXX	DIF size, 24 Bit Integer
66	1	03	VIF extension of VIF-codes
67	1	FD	Error flags
68 – 70	3	17	Error flags (Diagnostics active bitmaps(1))
71	1	XXX	DIF size, 32 Bit Real
72	1	05	VIF extension of VIF-codes
73	1	FD	Current
74	1	DC	VIF next byte is manufacturer specific
75	1	FF	L1
76 – 79	4	01	Current per phase,I1
80	1	XXXX	DIF size, 32 Bit Real
81	1	05	VIF extension of VIF-codes
82	1	FD	Current

Byte No	Size	Value	Description
83	1	DC	VIF next byte is manufacturer specific
84	1	FF	L2
85 – 88	4	02	Current per phase,I2
89	1	XXXX	DIF size, 32 Bit Real
90	1	05	VIF extension of VIF-codes
91	1	FD	Current
92	1	DC	VIF next byte is manufacturer specific
93	1	FF	L3
94 – 97	4	03	Current per phase,I3
98	1	XXXX	DIF size, 32 Bit Real
99	1	05	VIF extension of VIF-codes
100	1	FD	Current
101	1	DC	VIF next byte is manufacturer specific
102	1	FF	Average
103 – 106	4	00	Average current
107	1	XXXX	DIF size, 32 Bit Real
108	1	05	VIF extension of VIF-codes
109	1	FD	Voltage
110	1	C9	VIF next byte is manufacturer specific
111	1	FF	L1-L2
112 – 115	4	05	Voltage,L1-L2
116	1	XXXX	DIF size, 32 Bit Real
117	1	05	VIF extension of VIF-codes
118	1	C9	Voltage
119	1	FF	VIF next byte is manufacturer specific
120	1	06	L2-L3
121 – 124	4	XXXX	Voltage,L2-L3
125	1	05	DIF size, 32 Bit Real
126	1	FD	VIF extension of VIF-codes
127	1	C9	Voltage
128	1	FF	VIF next byte is manufacturer specific
129	1	07	L3-L1
130 – 133	4	XXXX	Voltage,L3-L1
134	1	05	DIF size, 32 Bit Real
135	1	FD	VIF extension of VIF-codes
136	1	C9	Voltage
137	1	FF	VIF next byte is manufacturer specific
138	1	08	L-L Average
139 – 142	4	XXXX	Average voltage, L -L
143	1	05	DIF size, 32 Bit Real
144	1	FD	VIF extension of VIF-codes
145	1	C9	Voltage
146	1	FF	VIF next byte is manufacturer specific
147	1	01	L1

Byte No	Size	Value	Description
148 – 151	4	XXXX	Voltage, L1
152	1	05	DIF size, 32 Bit Real
153	1	FD	VIF extension of VIF-codes
154	1	C9	Voltage
155	1	FF	VIF next byte is manufacturer specific
156	1	02	L2
157 – 160	4	XXXX	Voltage, L2
161	1	05	DIF size, 32 Bit Real
162	1	FD	VIF extension of VIF-codes
163	1	C9	Voltage
164	1	FF	VIF next byte is manufacturer specific
165	1	03	L3
166 – 169	4	XXXX	Voltage, L3
170	1	05	DIF size, 32 Bit Real
171	1	FD	VIF extension of VIF-codes
172	1	C9	Voltage
173	1	FF	VIF next byte is manufacturer specific
174	1	04	L-N, average
175 – 178	4	XXXX	Average, L-N
179	1	05	DIF size, 32 Bit Real
180	1	AE	Power
181	1	FF	VIF next byte is manufacturer specific
182	1	01	L1
183 – 186	4	XXXX	Power,L1
187	1	05	DIF size, 32 Bit Real
188	1	AE	Power
189	1	FF	VIF next byte is manufacturer specific
190	1	02	L2
191 – 194	4	XXXX	Power,L2
195	1	05	DIF size, 32 Bit Real
196	1	AE	Power
197	1	FF	VIF next byte is manufacturer specific
198	1	03	L3
199 – 202	4	XXXX	Power,L3
203	1	05	DIF size, 32 Bit Real
204	1	2E	Power
205 – 208	4	XXXX	Total power
209	1	85	DIF size, 32 Bit Real
210	1	40	DIFE: Unit 1
211	1	2E	Power
212 – 215	4	XXXX	Reactive power
216	1	85	DIF size, 32 Bit Real
217	1	80	DIFE
218	1	40	DIFE: Unit 2

Byte No	Size	Value	Description
219	1	2E	Power
220 – 223	4	XXXX	Apparent power
224	1	05	DIF size, 32 Bit Real
225	1	FF	VIF next byte is manufacturer specific
226	1	0A	Power factor
227 – 230	4	XXXX	Power factor value
231	1	05	DIF size, 32 Bit Real
232	1	FF	VIF next byte is manufacturer specific
233	1	0B	Frequency
234 – 237	4	XXXX	Frequency value
238	1	07	DIF size, 64 Bit Integer
239	1	03	Energy
240 – 247	8	XXXXXXXX	Total Active Energy Import
248	1	1F	DIF, more records will follow in next telegram
249	1	X	CS checksum, calculated from C field to last data
250	1	16	Stop character

NOTE: Error flags illustrate:

0 = Inactive

1 = Active

Bit0 = Code 101

Bit1 = Code 102

Bit2 = Code 201

Bit3 = Code 202

Bit4 = Code 203

Bit5 = Code 204

Bit6 = Code 205

Bit7 = Code 206

Bit8 = Code 207

2nd telegram information

Byte No	Size	Value	Description
1	1	68	Start character
2	1	F6	L-field, calculated from C field to last user data
3	1	F6	L-field, repeated
4	1	68	Start character
5	1	08	C-field, RSP_UD
6	1	X	A-field, address
7	1	72	CI-field, variable data respond, LSB first
8 – 11	4	XXXX	Identification number, 8 BCD digits
12 – 13	2	4CA3	Manufacturer: SCH
14	1	00	Version
15	1	02	Medium, 02 = Electricity
16	1	X	Number of accesses

Byte No	Size	Value	Description
17	1	00	Status
18 – 19	2	0000	Signature (0000 = no encryption)
20	1	07	DIF size, 64 Bit Integer
21	1	83	Energy
22	1	FF	VIF next byte is manufacturer specific
23	1	09	Export energy
24 – 31	8	XXXXXXXX	Total Active Energy Export
32	1	87	DIF size, 64 Bit Integer
33	1	87	DIFE: Unit1
34	1	40	Energy
35 – 42	8	03	Total Reactive Energy Import
43	1	XXXXXXXX	DIF size, 64 Bit Integer
44	1	87	DIFE:Unit 1
45	1	40	Energy
46	1	83	VIF next byte is manufacturer specific
47	1	FF	Export energy
48 – 55	8	09	Total Reactive Energy Export
56	1	XXXXXXXX	DIF size, 32 Bit Integer
57	1	04	Date/Time
58	1	ED	VIF next byte is manufacturer specific
59	1	FF	Energy Reset
60 – 63	4	0C	Energy Reset Date/Time
64	1	XXXX	DIF size, 64 Bit Integer
65	1	07	Energy
66	1	83	VIF next byte is manufacturer specific
67	1	FF	Partial energy
68 – 75	8	0D	Partial Active Energy Import
76	1	XXXXXXXX	DIF size, 64 Bit Integer
77	1	87	DIFE: Unit 1
78	1	40	Energy
79	1	83	VIF next byte is manufacturer specific
80	1	FF	Partial Energy
81 – 88	8	0D	Partial Reactive Energy Import
89	1	XXXXXXXX	DIF size, 64 Bit Integer
90	1	07	Energy
91	1	83	VIF next byte is manufacturer specific
92	1	FF	L1
93 – 100	8	01	Active Energy Delivered, L1
101	1	XXXXXXXX	DIF size, 64 Bit Integer
102	1	07	Energy
103	1	83	VIF next byte is manufacturer specific
104	1	FF	L2
105 – 112	8	02	Active Energy Delivered, L2

Byte No	Size	Value	Description
113	1	XXXXXXXX	DIF size, 64 Bit Integer
114	1	07	Energy
115	1	83	VIF next byte is manufacturer specific
116	1	FF	L3
117 – 124	8	03	Active Energy Delivered, L3
125	1	XXXXXXXX	DIF size, 32 Bit Integer
126	1	04	Date/Time
127	1	ED	VIF next byte is manufacturer specific
128	1	0E	Input metering reset
129 – 132	4	XXXX	Input Metering Accumulation Reset D/T
133	1	07	DIF size, 64 Bit Integer
134	1	FD	VIF extension
135	1	61	Input Metering Accumulation Channel 1
136 – 143	8	XXXXXXXX	Input Metering Channel 1 Value
144	1	03	DIF size, 24 Bit Integer
145	1	FF	VIF next byte is manufacturer specific
146	1	10	Energy Active Rate
147 – 149	3	XXX	Energy Active Rate, Number
150	1	87	DIF size, 64 Bit Integer
151	1	10	DIFE: Tariff 1
152	1	03	Energy
153 – 160	8	XXXXXXXX	Active Energy Delivered Rate 1
161	1	87	DIF size, 64 Bit Integer
162	1	20	DIFE: Tariff 2
163	1	03	Energy
164 – 171	8	XXXXXXXX	Active Energy Delivered Rate 2
172	1	87	DIF size, 64 Bit Integer
173	1	30	DIFE: Tariff 3
174	1	03	Energy
175 – 182	8	XXXXXXXX	Active Energy Delivered Rate 3
183	1	87	DIF size, 64 Bit Integer
184	1	80	DIFE: Tariff 4
185	1	10	DIFE: Tariff 4
186	1	03	Energy
187 – 194	8	XXXXXXXX	Active Energy Delivered Rate 4
195	1	04	DIF size, 32 Bit Integer
196	1	6D	Date/Time
197 – 200	4	XXXX	System date/time
201	1	03	DIF size, 24 Bit Integer
202	1	FF	VIF next byte is manufacturer specific
203	1	2C	Energy pulse duration
204 – 206	3	XXX	Value, Energy pulse duration
207	1	03	DIF size, 24 Bit Integer

Byte No	Size	Value	Description
208	1	FF	VIF next byte is manufacturer specific
209	1	2D	Digital output association
210 – 212	3	XXX	Value, Digital output association
213	1	05	DIF size, 32 Bit Real
214	1	FF	VIF next byte is manufacturer specific
215	1	2E	Pulse weight
216 – 219	4	XXXX	Value, Pulse weight
220	1	05	DIF size, 32 Bit Real
221	1	FF	VIF next byte is manufacturer specific
222	1	2F	Pulse constant
223 – 226	4	XXXX	Value, Pulse constant
227	1	03	DIF size, 24 Bit Integer
228	1	FF	VIF next byte is manufacturer specific
229	1	30	Digital input association
230 – 232	3	XXX	Value, Digital input association
233	1	03	DIF size, 24 Bit Integer
234	1	FD	VIF extension
235	1	1B	Digital input control mode
236 – 238	3	XXX	Value, Digital input control mode
239	1	02	DIF size, 16 Bit Integer
240	1	FF	VIF next byte is manufacturer specific
241	1	32	Digital input status
242 – 243	2	XX	Value, Digital input status
244	1	03	DIF size, 24 Bit Integer
245	1	FD	VIF extension
246	1	1A	Digital output control mode status
247 – 249	3	XXX	Value, Digital output control mode status
250	1	1F	DIF, more records will follow in next telegram
251	1	X	CS checksum, calculated from C field to last data
252	1	16	Stop character

3rd telegram information

Byte No	Size	Value	Description
1	1	68	Start character
2	1	F1	L-field, calculated from C field to last user data
3	1	F1	L-field, repeated
4	1	68	Start character
5	1	08	C-field, RSP_UD
6	1	X	A-field, address
7	1	72	CI-field, variable data respond, LSB first
8 – 11	4	XXXX	Identification Number, 8 BCD digits
12 – 13	2	4CA3	Manufacturer: SCH

Byte No	Size	Value	Description
14	1	00	Version
15	1	02	Medium, 02 = Electricity
16	1	X	Number of accesses
17	1	00	Status
18 – 19	2	0000	Signature (0000 = no encryption)
20	1	02	DIF size, 16 Bit Integer
21	1	FF	VIF next byte is manufacturer specific
22	1	34	Overload alarm setup
23 – 24	2	XX	Value, Overload alarm setup
25	1	05	DIF size, 32 Bit Real
26	1	FF	VIF next byte is manufacturer specific
27	1	FF	Pickup setpoint
28 – 31	4	35	Value, Pickup setpoint
32	1	XXXX	DIF size, 16 Bit Integer
33	1	02	VIF next byte is manufacturer specific
34	1	FF	Digital output associate
35 – 36	2	36	Value, Digital output associate
37	1	XX	DIF size, 16 Bit Integer
38	1	02	VIF next byte is manufacturer specific
39	1	FF	Activated status
40 – 41	2	37	Value, Activated status
42	1	XX	DIF size, 16 Bit Integer
43	1	02	VIF next byte is manufacturer specific
44	1	FF	Unacknowledged status
45 – 46	2	38	Value, Unacknowledged status
47	1	XX	DIF size, 32 Bit Integer
48	1	04	Date/Time
49	1	ED	VIF next byte is manufacturer specific
50	1	FF	Date time last alarm
51 – 54	4	39	Value, Date time last alarm
55	1	XXXX	DIF size, 32 Bit Real
56	1	05	VIF next byte is manufacturer specific
57	1	FF	Value last alarm
58 – 61	4	3A	Value last alarm
62	1	XXXX	DIF size, 48 Bit Integer
63	1	06	VIF next byte is manufacturer specific
64	1	FF	Meter operation time
65 – 70	6	20	Value, Meter operation time
71	1	XXXXXX	DIF size, 24 Bit Integer
72	1	03	VIF next byte is manufacturer specific
73	1	FF	Num of phases
74 – 76	3	21	Value, Num of phases
77	1	XXX	DIF size, 24 Bit Integer

Byte No	Size	Value	Description
78	1	03	VIF next byte is manufacturer specific
79	1	FF	Num of wires
80 – 82	3	22	Value, Num of wires
83	1	XXX	DIF size, 24 Bit Integer
84	1	03	VIF next byte is manufacturer specific
85	1	FF	Power System Configuration
86 – 88	3	23	Value, Power System Configuration
89	1	XXX	DIF size, 24 Bit Integer
90	1	03	VIF next byte is manufacturer specific
91	1	FF	Nominal Frequency
92 – 94	3	24	Value, Nominal Frequency
95	1	05	DIF size, 32 Bit Real
96	1	03	Energy
97 – 100	4	XXXX	Total Active Energy Import
101	1	05	DIF size, 32 Bit Real
102	1	83	Energy
103	1	FF	VIF next byte is manufacturer specific
104	1	09	Export energy
105 – 108	4	XXXX	Total Active Energy Export
109	1	85	DIF size, 32 Bit Real
110	1	40	DIFE: Unit1
111	1	03	Energy
112 – 115	4	XXXX	Total Reactive Energy Import
116	1	85	DIF size, 32 Bit Real
117	1	40	DIFE:Unit 1
118	1	83	Energy
119	1	FF	VIF next byte is manufacturer specific
120	1	09	Export energy
121 – 124	4	XXXX	Total Reactive Energy Export
125	1	05	DIF size, 32 Bit Real
126	1	83	Energy
127	1	FF	VIF next byte is manufacturer specific
128	1	0D	Partial energy
129 – 132	4	XXXX	Partial Active Energy Import
133	1	85	DIF size, 32 Bit Real
134	1	40	DIFE: Unit 1
135	1	83	Energy
136	1	FF	VIF next byte is manufacturer specific
137	1	0D	Partial Energy
138 – 141	4	XXXX	Partial Reactive Energy Import
142	1	05	DIF size, 32 Bit Real
143	1	83	Energy
144	1	FF	VIF next byte is manufacturer specific

Byte No	Size	Value	Description
145	1	01	L1
146 – 149	4	XXXX	Active Energy Delivered, L1
150	1	05	DIF size, 32 Bit Real
151	1	83	Energy
152	1	FF	VIF next byte is manufacturer specific
153	1	02	L2
154 – 157	4	XXXX	Active Energy Delivered, L2
158	1	05	DIF size, 32 Bit Real
159	1	83	Energy
160	1	FF	VIF next byte is manufacturer specific
161	1	03	L3
162 – 165	4	XXXX	Active Energy Delivered, L3
166	1	05	DIF size, 32 Bit Real
167	1	FD	VIF extension
168	1	61	Input Metering Accumulation Channel 1
169 – 172	4	XXXX	Input Metering Channel 1 Value
173	1	85	DIF size, 32 Bit Real
174	1	10	DIFE: Tariff 1
175	1	03	Energy
176 – 179	4	XXXX	Active Energy Delivered Rate 1
180	1	85	DIF size, 32 Bit Real
181	1	20	DIFE: Tariff 2
182	1	03	Energy
183 – 186	4	XXXX	Active Energy Delivered Rate 2
187	1	85	DIF size, 32 Bit Real
188	1	30	DIFE: Tariff 3
189	1	03	Energy
190 – 193	4	XXXX	Active Energy Delivered Rate 3
194	1	85	DIF size, 32 Bit Real
195	1	80	DIFE: Tariff 4
196	1	10	DIFE: Tariff 4
197	1	03	Energy
198 – 201	4	XXXX	Active Energy Delivered Rate 4
202	1	03	DIF size, 24 Bit Integer
203	1	FF	VIF next byte is manufacturer specific
204	1	25	Number VTs
205 – 207	3	XXX	Value, Number VTs
208	1	05	DIF size, 32 Bit Real
209	1	FF	VIF next byte is manufacturer specific
210	1	26	VT Primary
211 – 214	4	XXXX	Value, VT Primary
215	1	03	DIF size, 24 Bit Integer
216	1	FF	VIF next byte is manufacturer specific

Byte No	Size	Value	Description
217	1	27	VT Secondary
218 – 220	3	XXX	Value, VT Secondary
221	1	03	DIF size, 24 Bit Integer
222	1	FF	VIF next byte is manufacturer specific
223	1	28	Number CTs
224 – 226	3	XXX	Value, Number CTs
227	1	03	DIF size, 24 Bit Integer
228	1	FF	VIF next byte is manufacturer specific
229	1	29	CT Primary
230 – 232	3	XXX	Value, CT Primary
233	1	03	DIF size, 24 Bit Integer
234	1	FF	VIF next byte is manufacturer specific
235	1	2A	CT Secondary
236 – 238	3	XXX	Value, CT Secondary
239	1	03	DIF size, 24 Bit Integer
240	1	FF	VIF next byte is manufacturer specific
241	1	2B	VT connection type
242 – 244	3	XXX	Value, VT connection type
245	1	0F	DIF indicating that this is the last telegram
246	1	X	CS checksum, calculated from C field to last data
247	1	16	Stop character

4th telegram information

Byte No	Size	Value	Description
1	1	68	Start character
2	1	X	L-field, calculated from C field to last user data
3	1	X	L-field, repeated
4	1	68	Start character
5	1	08	C-field, RSP_UD
6	1	X	A-field, address
7	1	72	CI-field, variable data respond, LSB first
8 – 11	4	XXXX	Identification number, 8 BCD digits
12 – 13	2	4CA3	Manufacturer: SCH
14	1	00	Version
15	1	02	Medium, 02 = Electricity
16	1	X	Number of accesses
17	1	X	Status
18 – 19	2	0000	Signature (0000 = no encryption)
20	1	07	DIF size, 64 Bit Integer
21	1	03	Energy
22 – 29	8	XXXXXXXX	Total Active Energy Import
30	1	07	DIF size, 64 Bit Integer

Byte No	Size	Value	Description
31	1	83	Energy
32	1	FF	VIF next byte is manufacturer specific
33	1	FF	Export energy
34 – 41	8	09	Total Active Energy Export
42	1	XXXXXXXX	DIF size, 32 Bit Real
43	1	05	Power
44 – 47	4	2E	Total Power
48	1	XXXX	DIF indicating that this is the last telegram
49	1	0F	CS checksum, calculated from C field to last data
50	1	X	Stop character

Telegram information for meter configuration

You can use the information provided in this section to write to the meter using a SND_UD function.

NOTE: If Com. Protection is enabled, you may receive an error response when you try to configure the meter over communications.

You can also configure the meter using the M-Bus tool available from www.se.com.

Supported VIFE codes for meter configuration

NOTE: E denotes the extension bit; the hex value assumes E = 0.

VIFE code		Action	Description
bin	hex		
E000 0000	00	Write and replace	Replaces the old value with the new value
E000 0111	07	Clear	Resets an accumulated value to 0 (zero)

Date/time setup

Data format	Primary VIF	Description
04	6D	Type F data type, as described in the M-Bus protocol documentation Supports the date and time in the following format YYYY:MM:DD hh:mm:ss

Power system setup

NOTE: E denotes the extension bit; the hex value assumes E = 0.

SND_UD code	Data format	Manufacturer specific VIFE		Range/Options	Description
		bin	hex		
00	02	E010 0011	23	0, 1, 2, 3, 11, 13	Power system configuration: 0 = 1PH2W L-N 1 = 1PH2W L-L 2 = 1PH3W L-L with N 3 = 3PH3W 11 = 3PH4W 13 = 1PH4 wire multi L with N
00	02	E010 0100	24	50, 60	Nominal frequency
00	05	E010 0110	26	VT Secondary to 1000000.0	VT Primary **NOTE:** Applicable only for iEM3235
00	02	E010 0111	27	100, 110, 115, 120	VT Secondary **NOTE:** Applicable only for iEM3235
00	02	E010 1000	28	1, 2, 3	Number of CTs **NOTE:** Applicable only for iEM3235
00	02	E010 1001	29	1 to 32767	CT Primary **NOTE:** Applicable only for iEM3235
00	02	E010 1010	2A	1, 5	CT Secondary **NOTE:** Applicable only for iEM3235
00	02	E010 1011	2B	0, 1, 2	VT Connection Type: 0 = direct connect 1= 3PH3W (2 VTs) 2 = 3PH4W (3 VTs) **NOTE:** Applicable only for iEM3235

Multi Tariff setup

NOTE: E denotes the extension bit; the hex value assumes E = 0.

SND_UD code	Data format	Manufacturer specific VIFE		Range/Options	Description
		bin	hex		
00	02	E001 0001	11	0,1	Set Multi Tariff control mode to Disabled or by Communication: 0 = Disabled 1 = by Communication **NOTE:** To configure the Multi Tariff feature to be controlled by the digital input or device clock, use the HMI.
00	02	E001 0000	10	1, 2, 3, 4	Set the active tariff: 1 = Rate A (tariff 1) 2 = Rate B (tariff 2) 3 = Rate C (tariff 3) 4 = Rate D (tariff 4) **NOTE:** You can only set the tariff using this method if the Tariff Mode is set to by Communication.

Communications setup

SND_UD code	Data format	Primary VIF	Range/Options	Description
00	01	7A	0 – 250	Primary address

To change the baud rate using communications, send a telegram to the meter with the appropriate value in the CI-field:

Baud rate	Hex value for CI-field
300	B8
600	B9
1200	BA
2400	BB
4800	BC
9600	BD

Digital input setup

NOTE: E denotes the extension bit; the hex value assumes E = 0.

SND_UD code	Data format	Manufacturer specific VIFE		Range/Options	Description
		bin	hex		
00	02	E001 1011	1B	0, 3, 5	Digital input control mode: 0 = Normal (Input Status) 3 = Input metering 5 = Partial energy reset
00	05	E010 1111	2F	1 – 10000	Pulse constant (pulses/unit; applicable when the digital input is used for input metering)

Digital output setup

NOTE: E denotes the extension bit; the hex value assumes E = 0.

SND_UD code	Data format	Manufacturer specific VIFE		Range/Options	Description
		bin	hex		
00	02	E001 1010	1A	2, 3, 0xFFFF	Digital output control mode: 2 = Alarm 3 = Energy (energy pulsing) 0xFFFF = Disable
00	05	E010 1110	2E	iEM3135 / iEM3335: 1, 10, 20, 100, 200, 1000 iEM3235: 0.01, 0.1, 1, 10, 100, 500	Pulse constant **NOTE:** This information only applies if the digital output control mode is set to for Pulse.
00	02	E010 1100	2C	50, 100, 200, 300	Pulse width in ms **NOTE:** This information only applies if the digital output control mode is set to for Pulse.

Overload alarm setup and acknowledgment

Use the information in the table below to configure the overload alarm.

NOTE: E denotes the extension bit; the hex value assumes E = 0.

SND_UD code	Data format	Manufacturer specific VIFE		Range/Options	Description
		bin	hex		
00	05	E011 0101	35	0 – 9999999	The pickup setpoint in kW for the overload alarm
00	02	E011 0100	34	0, 1	Overload alarm setup: 0 = Disable 1 = Enable

Use the information in the table below to acknowledge the overload alarm.

NOTE: E denotes the extension bit; the hex value assumes E = 1.

SND_UD code	Data format	Manufacturer specific VIFE		Range/Options	Description
		bin	hex		
07	00	E011 1000	B8	—	Acknowledge alarm

Resets

NOTE: E denotes the extension bit; the hex value assumes E = 1.

SND_UD code	Data format	Primary VIF		Manufacturer specific VIFE		Description
		bin	hex	bin	hex	
07	00	—	—	E000 1101	8D	Resets partial energy accumulation to 0
07	00	E110 0001	E1	—	—	Resets input accumulation to 0

M-Bus tool for data display and meter configuration

The M-Bus tool provides a graphical user interface where you can view meter data and configure meter settings. To obtain the tool, go to www.se.com and search for your meter model then select Downloads or contact your local Schneider Electric representative.

If you access a different meter without closing and re-opening the M-Bus tool, the fields displayed in the tool may not match the device you are accessing. The M-Bus tool may indicate a setting was changed without the setting on the meter actually changing.

NOTICE

INACCURATE DEVICE SETTINGS

Do not rely on the configuration information displayed in the M-Bus tool to determine if the associated device is correctly configured.

Failure to follow these instructions can result in inaccurate device settings and data results.

Installing the M-Bus tool

Before you install the tool, you need to download it from www.se.com or obtain it from your sales representative.

1. Navigate to the location where you saved the installation files.
2. Double-click setup.exe. A welcome screen appears. Click **Next**.

3. Confirm the installation location for the tool. Click **Browse** if you want to select a different location. Click **Next**. A confirmation screen appears.
4. Click **Next** to begin the installation. A screen appears when the installation is complete.
5. Click **Close**.

Accessing the meter using the tool

Before you access the meter using the M-Bus tool, make sure that you:

- Connect the meter to a level converter (for a direct serial connection) or a level converter and gateway (for connection using a serial or Ethernet network).
- Set the address of the device to a value other than 0 (zero) using the HMI.
- Install the M-Bus tool on your computer.

1. Select **Start > Programs > Schneider Electric > Mbus config tool** (or navigate to the location where you installed the program) and click **SE_ iEM3135_3235_3335 Mbus Tool** to open the tool. The login screen appears.
2. Select the port on your computer that you are using to connect to the meter and select the baud rate that matches the meter's configuration.
3. Click **Test Com** to open the communications port.
4. Type the device address in the **Address** field.
5. Select the communications mode that you want the tool to start in:
   - **Monitor(Automatic)**: The tool automatically sends read requests to and receives data from the meter. You can set the interval at which these read requests are sent.
   - **Monitor(Manual)**: You must manually send a read request to get data from the meter.
   - **Config**: The tool opens in configuration mode.

   You can change the mode from within the tool, if needed.
6. Click **OK** to start the M-Bus tool and access the meter.

Viewing meter data using the M-Bus tool

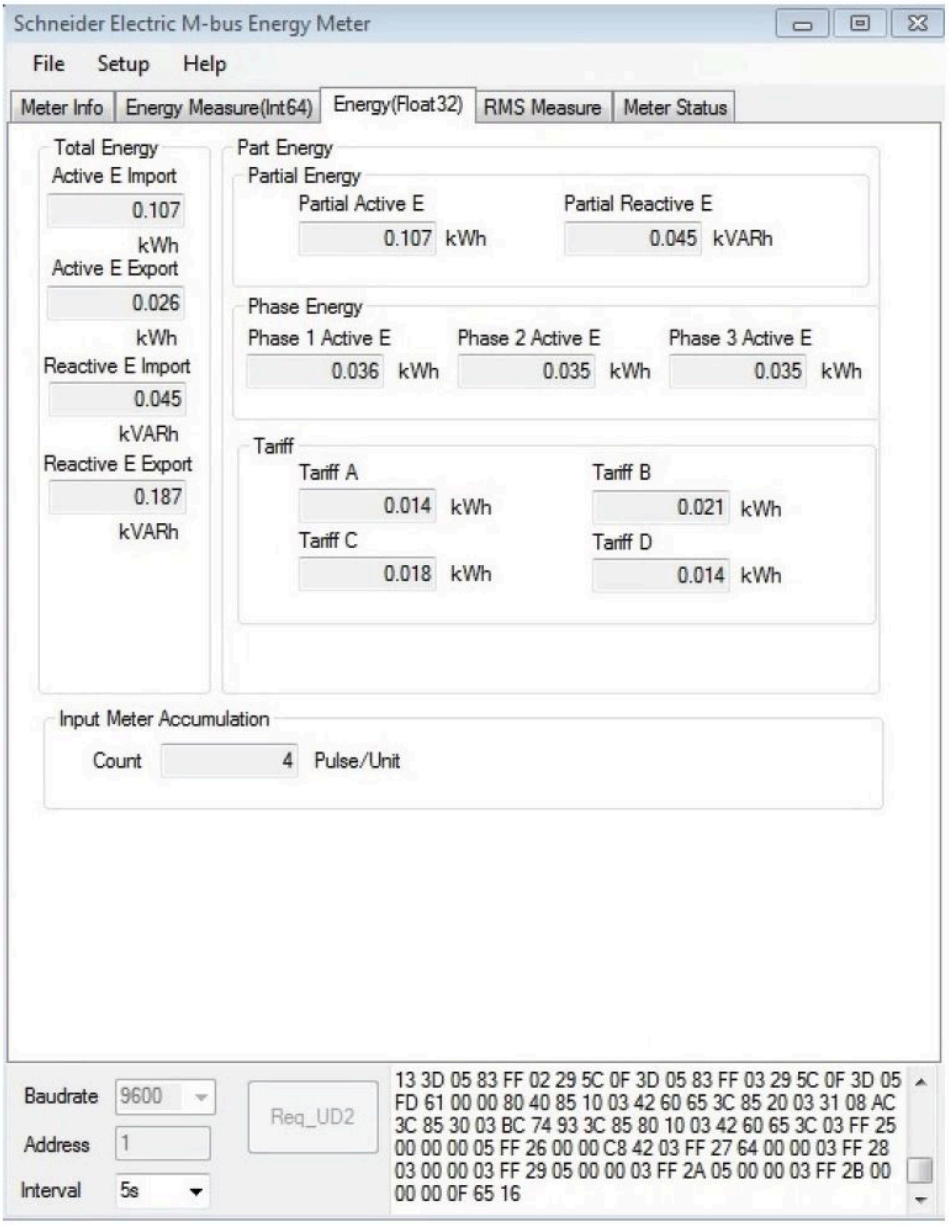

NOTE: The software version of M-Bus Meter Config tool is V3.0.

You can use two modes to view data from the device:

- Automatic mode: Select the update interval from the **Interval** dropdown list.
- Manual mode: Press **Req_UD2** to request data from the meter.

To switch modes, select **Setup > Monitor** then select the mode you want to use.

The tool has the following tabs for viewing meter information:

Tab name	Description
Meter Info	This tab provides basic information about the meter (for example, model and serial number) and any active error codes. Click **Clear** to remove the error codes from the display. This does not resolve the errors.
Energy Measure	This tab provides total and partial energy, energy per phase and energy by tariff information, as well as input accumulations and the date and time of the last input metering and partial energy resets.

Tab name	Description
RMS Measure	This tab provides power, current, and voltage values as well as frequency and power factor information.
Meter Status	This tab provides information on the settings and status of the digital input, digital outputs and alarms as well as existing power system settings.

Configuring the meter using the M-Bus tool

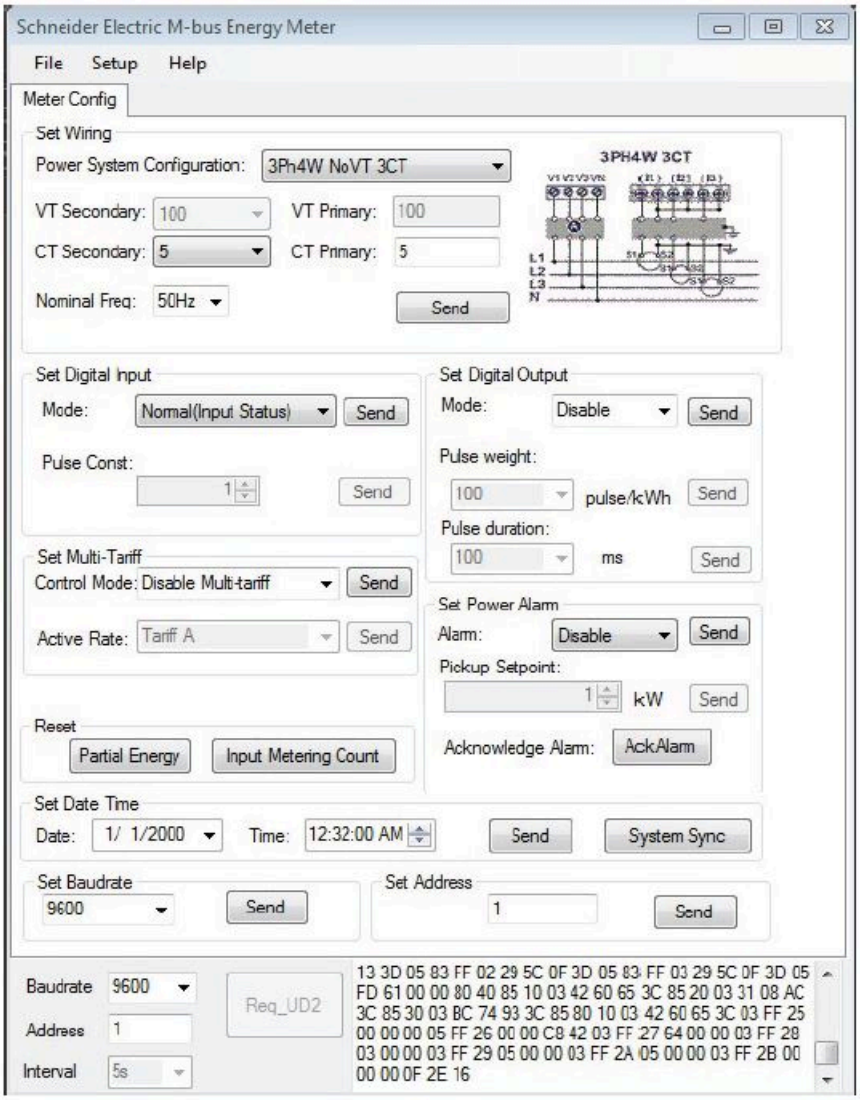

1. Select **Setup > Config** to switch to configuration mode.

2. Set the values that you want to change then click **Send** for that value or section. For example, to change the nominal frequency, select a different value from the list then click **Send** in **Set Wiring**.

   Some values may be unavailable based on existing settings.

   NOTE: If Com. Protection is enabled, you may receive a message that the configuration failed. Use the HMI to either: 1) configure the meter, or 2) disable Com. Protection then configure the meter using the tool.

   The configuration screen has the following sections:

Section	Description
Set Wiring	Configure power system settings (for example, power system configuration and nominal frequency).
Set Digital Input	Set the digital input mode and pulse constant.
Set Digital Output	Enable / disable the digital output and set the control mode, pulse weight and duration.
Set Multi Tariff	Disable the Multi Tariff feature or set the control mode to by Communication and set the active tariff if the control mode is set to by Communication.
Set Power Alarm	Enable / disable to the overload alarm, enter the setpoint, and acknowledge alarms.
Reset	Reset partial energy and input metering accumulations.
Set Date Time	Set the date and time or send a time synchronization signal to set the meter to the computer time.
Set Baudrate	Set the baud rate.
Set Address	Set the meter address.

Communications using BACnet

BACnet communications overview

Communications using BACnet MS/TP protocol is available on iEM3165 / iEM3265 / iEM3365 meter models.

The information in this section is intended for users with an advanced understanding of BACnet protocol, their communications network and their power system.

Key terms

Term	Definition
APDU	Application protocol data unit, that data portion of a BACnet message.
Confirmed message	A message for which the device expects an answer.
COV	Change of value, sets the amount by which a value has to change in order for the meter to send a subscription notification.
Device	A BACnet device is a unit that is designed to understand and use BACnet protocol (for example, a BACnet-enabled meter or software program). It contains information about the device and device data in objects and object properties. Your meter is a BACnet device.
MS/TP	Master-slave/token-passing over RS-485.
Object	Represents the device and device data. Each object has a type (for example, analog input or binary input) and has a number of properties.
Present value	The current value of an object.
Property	The smallest piece of information in BACnet communications, it consists of a name, data type and value.
Service	Messages from one BACnet device to another.
Subscription	Creates a relationship between the server and the meter, so that when the present value property of an object changes by more than the configured COV threshold (COV_Increment), a notification is sent.
Subscription notification	The message the meter sends to indicate a COV event has occurred.
Unconfirmed message	A message for which the device does not expect an answer.

BACnet protocol support

Go to www.se.com and search for your meter model to access the PICS (Protocol Implementation Conformance Statement) for your meter.

The meter supports the BACnet protocol as follows:

BACnet component	Description
Protocol version	1
Protocol revision	6
Standardized device profile (Annex L)	BACnet Application Specific Controller (B-ASC)
BACNet Interoperability Building Blocks (Annex K)	DS-RP-B (Data Sharing - Read Property - B)
	DS-RPM-B (Data Sharing - Read Property Multiple - B)
	DS-WP-B (Data Sharing - Write Property - B)
	DS-COV-B (Data Sharing - COV - B)
	DM-DDB-B (Device Management - Dynamic Device Binding - B)

BACnet component	Description
	DM-DOB-B (Device Management - Dynamic Object Binding - B)
	DM-DCC-B (Device Management - Device Communication Control - B)
Data link layer options	MS/TP master (clause 9) Baud rates 9600, 19200, 38400, 57600, 76800
Character set	ANSI X3.4
Supported services	subscribeCOV readProperty readPropertyMultiple writeProperty deviceCommunicationControl who-HAS who-Is I-Am I-Have Confirmed COV notification Unconfirmed COV notification
Segmentation	The meter does not support segmentation
Static device address binding	The meter does not support static device address binding
Networking options	None

The following standard object types are supported:

Object type	Optional properties supported	Writeable properties supported	Proprietary properties
Device Object	Max_Master Max_Info_Frames Description Location Local_Date Local_Time Active_COV_Subscriptions Profile Name	Object_Name Max_Master Max_Info_Frames Description Location APDU_Timeout Number_Of_APDU_Retries	D_800 ID_801 ID_802
Analog Input Object	COV_Increment		—
Analog Value Object	—		—
Binary Input Object	—	—	—

BACnet communications implementation

Configuring basic communication parameters

Before communicating with the meter using BACnet protocol, use the front panel to configure the following settings:

Setting	Possible values
Baud rate	9600 19200 38400 57600 76800
Mac Address	1 – 127
Device ID	0 – 4194303

Make sure that the Mac Address is unique on the serial loop and the Device ID is unique in your BACnet network.

Communications LED indicator for BACnet meters

The LED indicates the status of the meter's communications with the network.

LED state	Description
The LED is off	Communication is not active.
The LED is flashing	Communication is active. **NOTE:** The LED flashes even if there is a communications error.

Change of Value (COV) subscriptions

The meter supports up to 14 COV subscriptions. You can add COV subscriptions to Analog Input and Binary Input objects using your BACnet-compatible software.

BACnet object and property information

The following sections outline the supported objects and properties available on the meter.

Device object

The following table outlines the properties of the Device object, whether a property is read-only or read-write, and if the value of the property is stored in the meter's non-volatile onboard memory.

Device object property	R/W	Stored	Possible values	Description
Object_Identifier	R	—	configurable	The unique device ID number for the meter, in the format of <device, #>. **NOTE:** You must use the front panel to configure the device ID number.
Object_Name	R/W	√	configurable	A configurable name for the meter. The meter ships from the factory with a name of <model name>_<serial number> (for example, _0000000000).
Object_Type	R	—	Device	The object type for the meter.
System_Status	R	—	Operational	This value of this property is always Operational.
Vendor_Name	R	—	Schneider Electric	Meter manufacturer
Vendor_Identifier	R	—	10	The BACnet vendor identifier for Schneider Electric.

Device object property	R/W	Stored	Possible values	Description
Model_Name	R	—	iEM3165 / iEM3265 / iEM3365	Device model (for example, iEM3265) and serial number in the format <model name>_<serial number> (for example, iEM3265_0000000000).
Firmware_Revision	R	—	varies	BACnet firmware version, stored in an x.x.x format (for example, 1.7.2).
Application_Software_ Version	R	—	varies	Meter firmware version, stored in an x.x.xxx format (for example, 1.0.305).
Description	R/W	√	configurable	Optional description of the meter, limited to 64 characters.
Location	R/W	√	configurable	Optional description of the meter's location, limited to 64 characters.
Protocol_Version	R	—	varies	BACnet protocol version (for example, version 1)
Protocol_Revision	R	—	varies	BACnet protocol revision (for example, revision 6)
Protocol_Services_ Supported	R	—	0000 0100 0000 1011 0100 0000 0000 0000 0110 0000	The BACnet services supported by the meter: subscribeCOV, readProperty, readPropertyMultiple, writeProperty, deviceCommunicationControl, who- HAS, who-Is
Protocol_Object_Types_ Supported	R	—	1011 0000 1000 0000 0000 0000 0000 0000	The BACnet object types supported by the meter: analog input, binary input, multi-state input, device.
Object_list	R	—	varies	List of objects in the meter: iEM3165 / iEM3365: DE1, AI0 – AI48, AV0, BI0 – BI6 iEM3265: DE1, AI0 – AI55, AV0, BI0 – BI6
Max_APDU_Length_ Accepted	R	—	480	The maximum packet size (or application protocol data unit) that the meter can accept, in bytes.
Segmentation_Supported	R	—	0x03	The meter does not support segmentation.
Local_Date	R	—	configurable	Date **NOTE:** You must use the front panel to set the meter's date.
Local_Time	R	—	configurable	Time **NOTE:** You must use the front panel to set the meter's date.
APDU_Timeout	R/W	√	1000 – 30000	The amount of time (in milliseconds) before the meter tries to resend a confirmed message that has not been answered.
Number_Of_APDU_ Retries	R/W	√	1 – 10	The number of times the meter tries to resend an unanswered confirmed request.
Max_Master	R/W	√	1 – 127	The highest master address the meter will try to discover when the next node is unknown.
Max_Info_Frames	R/W	√	1 – 14	Maximum number of messages the meter can send before it must pass the token.
Device_Address_Binding	R	—	—	Device address binding table is always blank because the meter does not initiate the who-Is service.
Database_Revision	R	√	varies	A number that increments when the object database on the meter changes (for example, when an object is created or deleted or the ID of an object changes).
Active_COV_ Subscriptions	R	—	varies	List of COV subscriptions currently active on the meter.
Profile_Name	R	—	varies	Device identifier that records the meter manufacturer, the meter family and the specific

Device object property	R/W	Stored	Possible values	Description
				meter model (for example, 10_iEM3000_ iEM3265).
ID 800	R	—	varies	Date and time of last energy reset
ID 801	R	—	varies	Date and time of last input metering accumulation reset
ID 802	R	—	varies	Date and time of the last alarm (DD/MM/YYYY hh:mm:ss)

Analog Input objects

The following tables list the Analog Input (AI) objects along with the units and default COV value for each AI object (if applicable).

NOTE: The Value Type for all AI objects is Real.

Energy and energy by tariff measurements

The energy and energy by tariff measurements listed below are preserved through power failures.

Object ID	Units	Default COV	Object name / description
27	Wh	100	AI27 - Total active energy import
28	Wh	100	AI28 - Total active energy export
29	Wh	100	AI29 - Total reactive energy import
30	Wh	100	AI30 - Total reactive energy export
31	Wh	100	AI31 - Partial active energy import
32	Wh	100	AI32 - Partial reactive energy import
33	Wh	100	AI33 - Active energy import phase 1
34	Wh	100	AI34 - Active energy import phase 2
35	Wh	100	AI35 - Active energy import phase 3
36	—	10	AI36 - Accumulation Input metering accumulation
37	—	1	AI37 - Tariff Energy Active Rate Denotes the active tariff: 0 = Multi Tariff feature is disabled 1 = Rate A (tariff 1) active 2 = Rate B (tariff 2) active 3 = Rate C (tariff 3) active 4 = Rate D (tariff 4) active
38	Wh	100	AI38 - Rate A (Tariff 1) active energy import
39	Wh	100	AI39 - Rate B (Tariff 2) active energy import
40	Wh	100	AI40 - Rate C (Tariff 3) active energy import
41	Wh	100	AI41 - Rate D (Tariff 4) active energy import

Instantaneous (RMS) measurements

Object ID	Units	Default COV	Object name / description
7	A	50	AI07 - Current Phase 1
8	A	50	AI08 - Current Phase 2
9	A	50	AI09 - Current Phase 3
10	A	50	AI10 - Current Average
11	V	10	AI11 - Voltage L1-L2
12	V	10	AI12 - Voltage L2-L3
13	V	10	AI13 - Voltage L3-L1
14	V	10	AI14 - Voltage Average L-L
15	V	10	AI15 - Voltage L1-N
16	V	10	AI16 - Voltage L2-N
17	V	10	AI17 - Voltage L3-N
18	V	10	AI18 - Voltage Average L-N
19	kW	10	AI19 - Active Power Phase 1
20	kW	10	AI20 - Active Power Phase 2
21	kW	10	AI21 - Active Power Phase 3
22	kW	10	AI22 - Active Power Total
23	kVAR		AI23 - Reactive Power Total
24	kVA	10	AI24 - Apparent Power Total
25	—	0.2	AI25 - Power Factor Total
26	Hz	10	AI26 - Frequency

Meter information

The following AI objects display information about the meter and its configuration.

NOTE: You can access the meter's configuration information over BACnet communications. However, you must use the front panel to configure the meter's settings.

Object ID	Units	Default COV	Object name / description
44	Seconds	10	AI44 - Meter operation time The time in seconds since the meter was last powered up
45	—	1	AI45 - Number of phases 1, 3
46	—	1	AI46 - Number of wires 2, 3, 4
47	—	1	AI47 - Power system type 0 = 1PH2W L-N 1 = 1PH2W L-L 2 = 1PH3W L-L with N 3 = 3PH3W 11 = 3PH4W 13 = 1PH4 wire multi L-N
48	Hz	1	AI48 - Nominal frequency 50, 60
49	—	1	AI49 - Number of VTs

Object ID	Units	Default COV	Object name / description
			0 – 10 **NOTE:** Applicable only for iEM3265
50	V	1	AI50 - VT Primary **NOTE:** Applicable only for iEM3265
51	V	1	AI51 - VT Secondary **NOTE:** Applicable only for iEM3265
52	—	1	AI52 - Number of CTs 1, 2, 3 **NOTE:** Applicable only for iEM3265
53	A	1	AI53 - CT Primary **NOTE:** Applicable only for iEM3265
54	A	1	AI54 - CT Secondary **NOTE:** Applicable only for iEM3265
55	—	1	AI55 - VT connection type 0 = Direct connection, not VTs 1 = 3PH3W (2VTs) 2 = 3PH4W (3VTs)

Communications settings information

The following AI objects display information about the meter's communications settings.

NOTE: You can access the meter's communications configuration information over BACnet communications. However, you must use the front panel to configure the meter's settings.

Object ID	Units	Default COV	Object name / description
00	—	1	AI00 - BACnet MAC Address
01	—	1	AI01 - BACnet Baud Rate

Digital input and output setting information

The following AI objects display information about the meter's I/O settings.

NOTE: You can access the meter's I/O configuration information over BACnet communications. However, you must use the front panel to configure the meter's settings.

Object ID	Units	Default COV	Object name / description
02	ms	1	AI02 - Pulse Duration The energy pulse duration (or pulse width), in milliseconds, of the digital output. **NOTE:** This information only applies if the digital output mode is set to energy pulsing.
03	—	1	AI03 - Pulse Weight The pulses/unit setting of the digital input when it is configured for input metering. **NOTE:** This information only applies if the digital input mode is set to Input Metering.
04	—	1	AI04 - Pulse Constant The pulses/kWh setting of the digital output. **NOTE:** This information only applies if the digital output mode is set to energy pulsing.

Object ID	Units	Default COV	Object name / description
05	—	1	AI05 - Digital Input Mode 0 = Normal (input status) 2 = Multi Tariff control 3 = Input metering 5 = All partial energy logs reset
06	—	1	AI06 - Digital Output Mode 2 = Alarm 3 = Energy 0xFFFF (65535 dec) = Disabled
42	kW	10	AI42 - Pickup Setpoint Active power alarm pickup setpoint in kW
43	kW	10	AI43 - Last Alarm Value

Analog value object

There is one Analog Value (AV) object available on the meter, named AV00 - Command. The available commands are listed in the following table. Enter the number in the Present_Value column in the Present_Value property of the AV object to write the associated command to the meter.

Command	Present_Value entry	Object name / description
Acknowledge Overload Alarm	20001.00	Acknowledge an overload alarm. The alarm indicator disappears from the front panel display after you acknowledge the alarm; however, this does not address the state that caused the alarm.
Reset Partial Energy Counter	2020.00	Reset partial energy accumulation to 0. Partial Active / Reactive Energy, Energy by Tariff and Phase Energy registers are reset.
Reset Input Metering Counter	2023.00	Resets input metering accumulation to 0.

Binary input objects

The following table lists the Binary Input (BI) objects available on the meter.

NOTE: The value type for all BI objects is Boolean.

Object ID	Object name / description
0	BI00 - Digital Output Enable Indicates whether or not the digital output functions as an energy pulse output: 0 = Digital output disabled 1 = Digital output is associated with active energy pulse output
1	BI01 - Digital Input Association Enable Indicates whether or not the digital input is associated with input metering: 0 = Digital input is not associated with input metering 1 = Digital input is associated with input metering
2	BI02 - Digital Input Status 0 = relay open 1 = relay closed **NOTE:** This information only applies if the digital input is set to Input Status.
3	BI03 - Alarm Enable

Object ID	Object name / description
	Indicates whether the overload alarm is enabled or disabled: 0 = disabled 1 = enabled
4	BI04 - Digital Output Association Enable Indicates if the digital output is configured for alarming: 0 = digital output disabled 1 = for Alarm (digital output is associated with the overload alarm)
5	BI05 - Alarm Status 0 = Alarm is inactive 1 = Alarm is active
6	BI06 - Unacknowledged status 0 = historic alarm is acknowledged 1 = historic alarm is unacknowledged

Power, energy and power factor

Power (PQS)

A typical AC electrical system load has both resistive and reactive (inductive or capacitive) components. Resistive loads consume real power (P) and reactive loads consume reactive power (Q).

Apparent power (S) is the vector sum of real power (P) and reactive power (Q):

$$S = \sqrt{P^2 + Q^2}$$

Real power is measured in watt (W or kW), reactive power is measured in var (VAR or kVAR) and apparent power is measured in volt-amp (VA or kVA).

Power and the PQ coordinate system

The meter uses the values of real power (P) and reactive power (Q) on the PQ coordinate system to calculate apparent power.

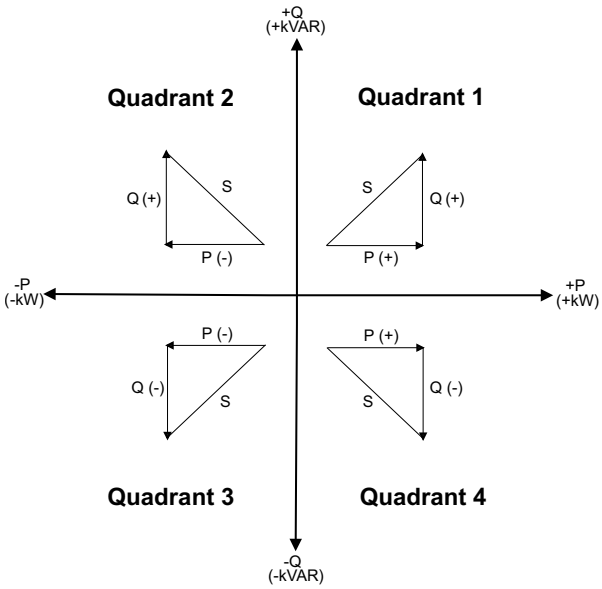

Power flow

Positive power flow P(+) and Q(+) means power is flowing from the power source towards the load. Negative power flow P(-) and Q(-) means power is flowing from the load towards the power source.

Energy delivered (imported) / energy received (exported)

The meter interprets energy delivered (imported) or received (exported) according to the direction of real power (P) flow.

Energy delivered (imported) means positive real power flow (+P) and energy received (exported) means negative real power flow (-P).

Quadrant	Real (P) power flow	Energy delivered (imported) or received (exported)
Quadrant 1	Positive (+)	Energy delivered (imported)
Quadrant 2	Negative (-)	Energy received (exported)
Quadrant 3	Negative (-)	Energy received (exported)
Quadrant 4	Positive (+)	Energy delivered (imported)

Power factor (PF)

Power factor (PF) is the ratio of real power (P) to apparent power (S).

PF is provided as a number between -1 and 1 or as a percentage from -100% to 100%, where the sign is determined by the convention.

$$PF = \frac{P}{S}$$

A purely resistive load has no reactive components, so its power factor is 1 (PF = 1, or unity power factor). Inductive or capacitive loads introduce a reactive power (Q) component to the circuit which causes the PF to become closer to zero.

True PF

True power factor includes harmonic content.

PF lead / lag convention

The meter correlates leading power factor (PF lead) or lagging power factor (PF lag) with whether the current waveform is leading or lagging the voltage waveform.

Current phase shift from voltage

For purely resistive loads the current waveform is in phase with the voltage waveform. For capacitive loads, current leads voltage. For inductive loads, current lags voltage.

Current lead / lag and load type

Current and voltage in phase (resistive)	Current leads voltage (capacitive)	Current lags voltage (inductive)
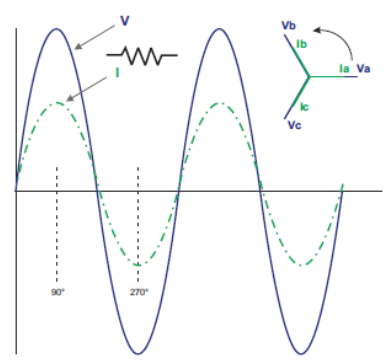	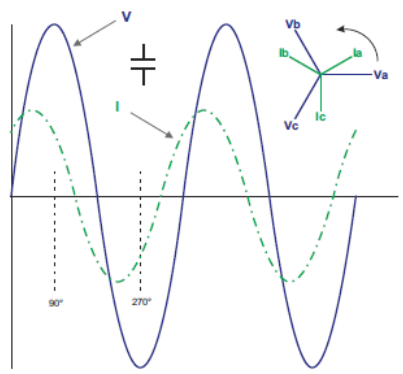	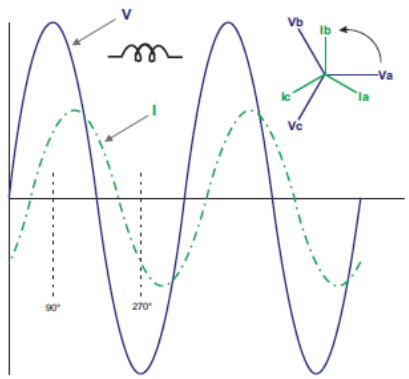

Power and PF lead / lag

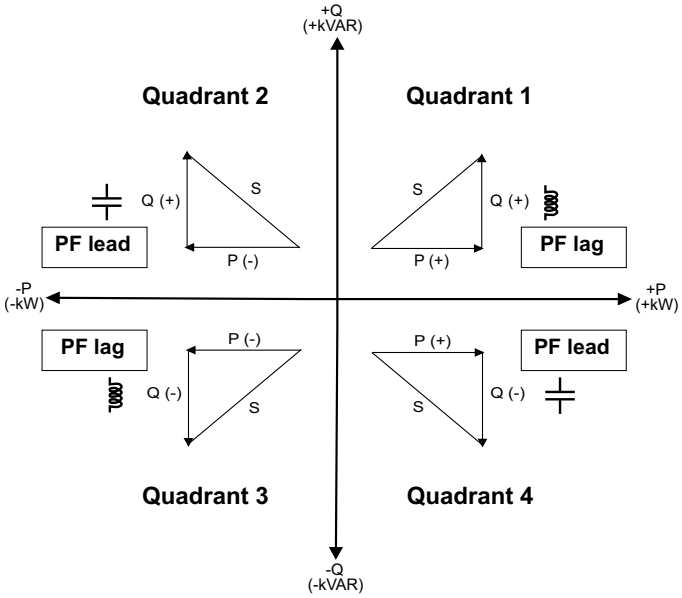

PF lead / lag summary

NOTE: The lagging or leading distinction does **NOT** equate to a positive or negative value. Rather, lagging corresponds to an inductive load, while leading corresponds to a capacitive load.

Quadrant	Current phase shift	load type	
Quadrant 1	Current lags voltage	Inductive	PF lag
Quadrant 2	Current leads voltage	Capacitive	PF lead
Quadrant 3	Current lags voltage	Inductive	PF lag
Quadrant 4	Current leads voltage	Capacitive	PF lead

PF sign convention

The meter shows positive or negative power factor according to IEC standards.

PF sign in IEC

The meter correlates power factor sign (PF sign) with the direction of real power (P) flow.

- For positive real power (+P), the PF sign is positive (+).
- For negative real power (-P), the PF sign is negative (-).

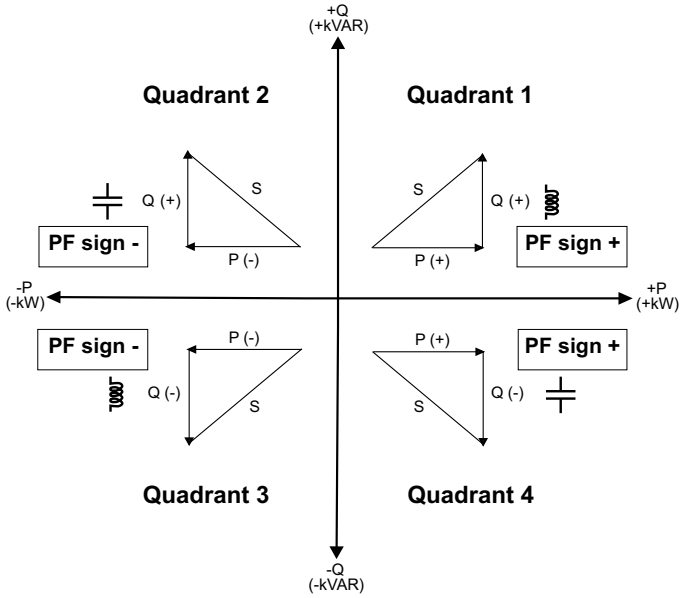

Power factor register format

The meter performs a simple algorithm to the PF value then stores it in the PF register.

Each power factor value (PF value) occupies one floating point register for power factor (PF register). The meter and software interpret the PF register for all reporting or data entry fields according to the following diagram:

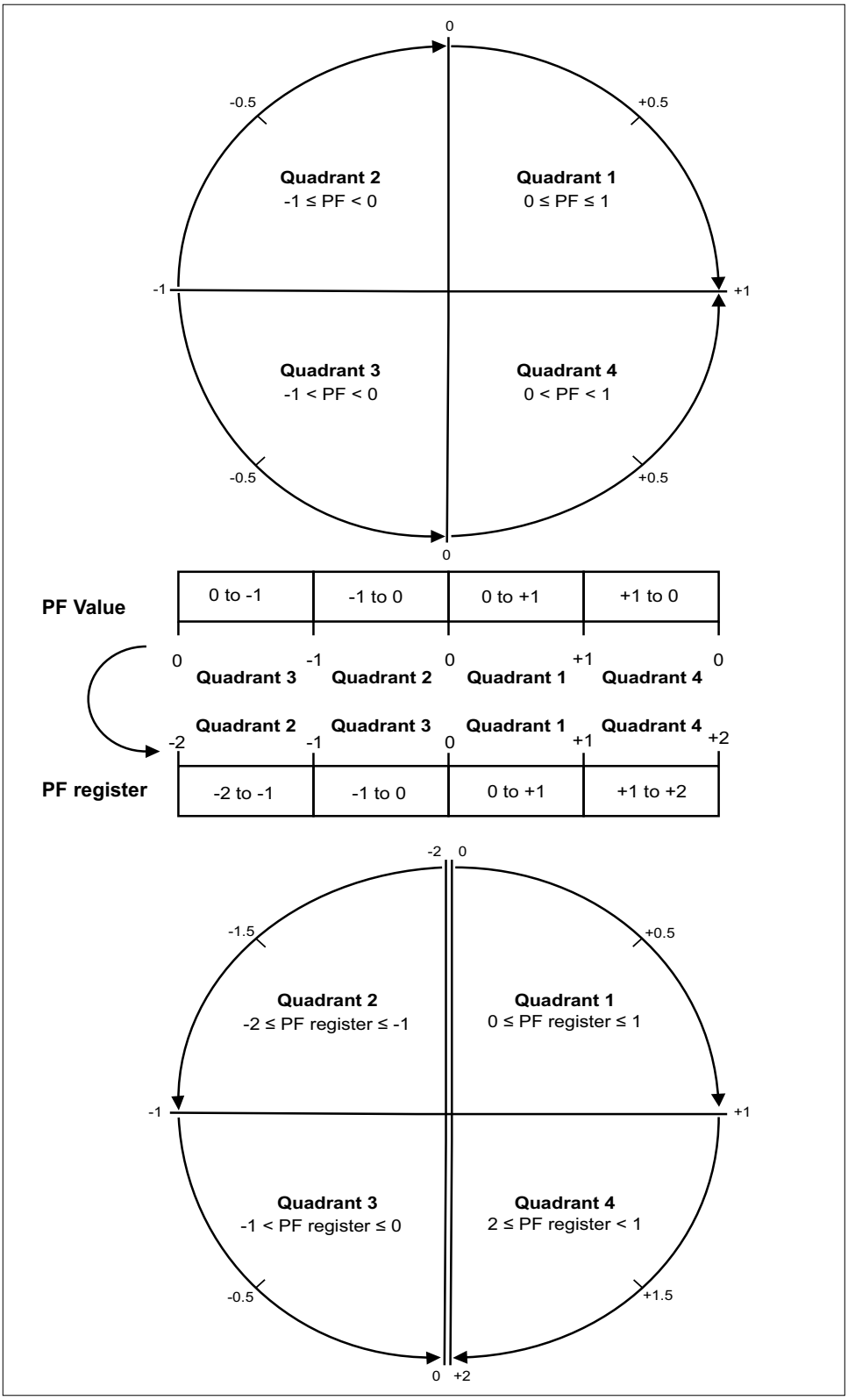

The PF value is calculated from the PF register value using the following formulae:

Quadrant	PF range	PF register range	PF formula
Quadrant 1	0 to +1	0 to +1	PF value = PF register value
Quadrant 2	-1 to 0	-2 to -1	PF value = (-2) - (PF register value)
Quadrant 3	0 to -1	-1 to 0	PF value = PF register value
Quadrant 4	+1 to 0	+1 to +2	PF value = (+2) - (PF register value)

Troubleshooting

Overview

The meter does not contain any user-serviceable parts. If the meter requires service, contact your local Schneider Electric representative.

NOTICE
RISK OF DAMAGE TO THE METER • Do not open the meter case. • Do not attempt to repair any components of the meter. **Failure to follow these instructions can result in equipment damage.**

Do not open the meter. Opening the meter voids the warranty.

Diagnosis screen

The Diagnosis screen lists any current diagnostic codes.

NOTE: The Diagnosis screen only appears if there is a specific event.

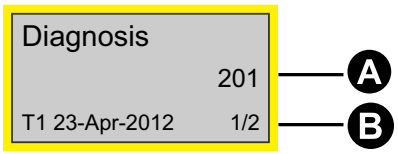

A	Diagnostic code
B	Existing events

1. Press the down button to scroll through the main display screens until you reach the **Diagnosis** screen.
2. Press the ▽ button to scroll through any existing events.

Diagnostic codes

If the combination of the backlight and the error / alert icon indicates an error or an abnormal situation, navigate to the diagnostics screen and find the diagnostics code. If the problem persists after following the instructions in the table, please contact Technical Support.

Diagnostic code (1)	Description	Possible solution
—	LCD display is not visible.	Check and adjust LCD contrast.
—	Push buttons do not respond.	Restart the meter by powering off and powering on again.
101	Metering stops due to an EEPROM error. Press **OK** to display total energy consumption.	Enter configuration mode and select **Reset Config**.
102	Metering stops due to a lack of a calibration table. Press **OK** to display total energy consumption.	Enter configuration mode and select **Reset Config**.
201	Metering continues. Mismatch between frequency settings and frequency measurements.	Correct the frequency settings according to the nominal frequency of the power system.

(1) Not all diagnostic codes apply to all devices.

Diagnostic code (2)	Description	Possible solution
202	Metering continues. Mismatch between wiring settings and wiring inputs.	Correct the wiring settings according to wiring inputs.
203	Metering continues. Phase sequence reversed.	Check the wire connections and correct the wiring settings if needed.
204	Metering continues. Total active energy is negative due to incorrect voltage and current connections.	Check the wire connections and correct the wiring settings if needed.
205	Metering continues. Date and Time have been reset due to a loss of power.	Set the Date and Time.
206	Metering continues. Pulse is missing due to overload on energy pulse output.	Check the energy pulse output settings and correct if needed.
207	Metering continues. Abnormal internal clock function.	Restart the meter by powering off and powering on again then reset the date and time.

(2) Not all diagnostic codes apply to all devices.

Specifications

Electrical characteristics

Power system inputs: iEM3100 series

Characteristic	Value
Measured voltage	Wye: 100...277 V L-N, 173...480 V L-L ±20% Delta: 173...480 V L-L ±20%
Maximum current	63 A
Measured current	0.5 A to 63 A
Overload	332 V L-N or 575 V L-L
Voltage impedance	3 MΩ
Current impedance	< 0.3 mΩ
Frequency	50 / 60 Hz ±10%
Measurement category	III
Minimum wire temperature rating required	90 °C (194 °F)
Burden	< 10 VA at 63 A
Wire	16 mm^2 / 6 AWG (Recommended: Copper wire with a compatible copper lug)
Wire strip length	11 mm / 0.43 in
Torque	1.8 Nm / 15.9 in·lb
Withstand	63 A continuous, 160 A at 10 sec/hr
Impulse voltage (Uimp)	6 kV for 1.2 µs
Utilization category	UC1

Power system inputs: iEM3300 series

Characteristic	Value
Measured voltage	Wye: 100...277 V L-N, 173...480 V L-L ±20% Delta: 173...480 V L-L ±20%
Maximum current	125 A
Measured current	1 A to 125 A
Overload	332 V L-N or 575 V L-L
Voltage impedance	6 MΩ
Current impedance	< 0.2 mΩ
Frequency	50 / 60 Hz ±10%
Measurement category	III
Minimum wire temperature rating required	105 °C (221 °F)
Burden	< 10 VA at 125 A
Wire	50 mm^2 / 1 AWG (Recommended: Copper wire with a compatible copper lug)
Wire strip length	13 mm / 0.5 in

Characteristic	Value
Torque	3.5 Nm / 30.9 in·lb
Withstand	125 A continuous, 320 A at 10 sec/hr
Impulse voltage	6 kV for 1.2 µs
Utilization category	UC3

Power system inputs: iEM3200 series

Characteristic		Value
Voltage inputs	Measured voltage	Wye: 100...277 V L-N, 173...480 V L-L ±20% Delta: 173...480 V L-L ±20%
	Overload	332 V L-N or 575 V L-L
	Impedance	3 MΩ
	Impulse voltage (Uimp)	6 kV for 1.2 µs
	Frequency	50 / 60 Hz ±10%
	Measurement category	III
	Minimum wire temperature rating required	90 °C (194 °F)
	Burden	< 10 VA
	Wire	2.5 mm² / 14 AWG (Recommended: Copper wire)
	Wire strip length	8 mm / 0.31 in
	Torque	0.5 Nm / 4.4 in·lb
Current inputs	Nominal current	1 A or 5 A
	Measured current	20 mA to 6 A
	Withstand	10 A continuous, 20 A at 10 sec/hr
	Minimum wire temperature rating required	90 °C (194 °F)
	Impedance	< 1 mΩ
	Frequency	50 / 60 Hz ±10%
	Burden	< 0.036 VA at 6 A
	Wire	6 mm² / 10 AWG (Recommended: Copper wire)
	Wire strip length	8 mm / 0.31 in
	Torque	0.8 Nm / 7.0 in·lb

Inputs and outputs

Characteristic		Value	Meters
Programmable digital output	Number	1	iEM3135 / iEM3155 / iEM3165 / iEM3235 / iEM3255 / iEM3265 / iEM3335 / iEM3355 / iEM3365
	Type	Form A	
	Load voltage	5...40 V DC	
	Maximum load current	50 mA	
	Output resistance	0.1...50 Ω	

Characteristic			Value	Meters
	Isolation		3.75 kV rms	
	Wire		1.5 mm² / 16 AWG	
	Wire strip length		6 mm / 0.23 in	
	Torque		0.5 Nm / 4.4 in·lb	
Pulse output	Number		1	iEM3110 / iEM3210 / iEM3310
	Pulses / kWh		Configurable	
	Voltage		5...30 V DC	
	Current		1...15 mA	
	Pulse width		Configurable Minimum width is 50 ms	
	Isolation		3.75 kV rms	
	Wire		2.5 mm² / 14 AWG	
	Wire strip length		7 mm / 0.28 in	
	Torque		0.5 Nm / 4.4 in·lb	
Programmable digital input	Number		2	iEM3115 / iEM3215
			1	iEM3135 / iEM3155 / iEM3165 / iEM3175 / iEM3235 / iEM3255 / iEM3265 / iEM3275 / iEM3335 / iEM3355 / iEM3365 / iEM3375
	Type		Type 1 (BS/ EN/ IEC 61131-2)	iEM3115 / iEM3135 / iEM3155 / iEM3165 / iEM3175 /iEM3215 / iEM3235 / iEM3255 / iEM3265 / iEM3275 / iEM3335 / iEM3355 / iEM3365 / iEM3375
	Maximum input	Voltage	40 V DC	
		Current	4 mA	
	Voltage OFF		0...5 V DC	
	Voltage ON		11...40 V DC	
	Nominal voltage		24 V DC	
	Isolation		3.75 kV rms	
	Wire		1.5 mm² / 16 AWG	
	Wire strip length		6 mm / 0.23 in	
	Torque		0.5 Nm / 4.4 in·lb	

Mechanical characteristics

Characteristic	Value		Meters
IP degree of protection	Front panel	IP40	iEM3100 / iEM3200 / iEM3300 series
	Meter body	IP20	iEM3100 / iEM3200 series
	Meter body except bottom wiring surface	IP20	iEM3300 series
Impact rating	IK08		iEM3100 / iEM3200 / iEM3300 series
Active energy display range	In kWh or MWh up to 99999999 MWh		iEM3200 series
	In kWh: 8 + 1 digits up to 99999999.9		iEM3100 / iEM3300 series
Energy pulsing LED (yellow [(3)])	500 imp/k(W/VAR)h		iEM3100 series
	5000 imp/k(W/VAR)h without consideration of transformer ratios		iEM3200 series
	200 imp/k(W/VAR)h		iEM3300 series

(3) The pulses / kWh of the energy pulsing LED cannot be changed.

Environmental characteristics

Characteristic	Value
Operating temperature	-25 to 70 °C (-13 to 158 °F)
Storage temperature	-40 to 85 °C (-40 to 185 °F)
Pollution degree	2
Relative humidity	5% to 95% RH non-condensing Maximum dew point 36 °C (97 °F)
Altitude	< 3000 m (9842 ft) above sea level
Location	For indoor use in a stationary panel Must be permanently connected and fixed
Product life	> 15 years, 45 °C (113 °F) 60% RH

Safety, EMI/EMC and product standards

Safety	BS/ EN/ IEC/ UL 61010-1: 2010 + A1: 2019	
Protective class	II Double insulated for user accessible parts	
Standard compliance	IEC 62052-31: 2015 IEC 62052-11: 2020 IEC 62053-21: 2020 IEC 62053-22: 2020 IEC 62053-23: 2020 IEC 61557-12: 2018/ AMD1: 2021	BS/ EN 62052-31 BS/ EN 62052-11 BS/ EN 62053-21 BS/ EN 62053-22 BS/ EN 62053-23 BS/ EN 61557-12 BS/ EN 50470-1 BS/ EN 50470-3

Measurement accuracy

Characteristic		Value	Meters
63 A	Active energy	Class 1 conforming to BS/ EN/ IEC 62053-21 and BS/ EN/ IEC 61557-12 (PMD- II/ DD/ K70/ 1): I_{max}=63 A, I_b=10 A, and I_{st}=0.04 A	iEM3100 series
		Class B conforming to BS/ EN 50470-3: I_{max}=63 A, I_{ref}=10 A, I_{min}=0.5 A, and I_{st}=0.04 A	iEM3110 / iEM3115 / iEM3135 / iEM3155 / iEM3165 / iEM3175
	Reactive energy	MID compliance, Class 2 conforming to BS/ EN/ IEC 62053-23 and BS/ EN/ IEC 61557-12 (PMD- II/ DD/ K70/ 2): I_{max}= 63 A, I_b=10 A, and I_{st}=0.05 A	iEM3135 / iEM3155 / iEM3165 / iEM3175
125 A	Active energy	Class 1 conforming to BS/ EN/ IEC 62053-21 and BS/ EN/ IEC 61557-12 (PMD- II/ DD/ K70/ 1): I_{max}=125 A, I_b=20 A, and I_{st}=0.08 A	iEM3300 series
		Class B conforming to BS/ EN 50470-3: I_{max}=125 A, I_{ref}=20 A, I_{min}=1 A, and I_{st}=0.08 A	iEM3310 / iEM3335 / iEM3355 / iEM3365 / iEM3375
	Reactive energy	MID compliance, Class 2 conforming to BS/ EN/ IEC 62053-23 and BS/ EN/ IEC 61557-12 (PMD- II/ DD/ K70/ 2): I_{max}= 125 A, I_b=20 A, and I_{st}=0.1 A	iEM3335 / iEM3355 / iEM3365 / iEM3375

Characteristic		Value	Meters
for x/1A current input	Active energy	Class 1 conforming to BS/ EN/ IEC 62053-21 and BS/ EN/ IEC 61557-12 (PMD-II/ SD/ SS/ 1 (x1 A CT)): I_{max}=1.2 A, I_n= 1 A, and I_{st}=0.002 A	iEM3200 series
		Class B conforming to BS/ EN 50470-3: I_{max}=1.2 A, I_n=1 A, I_{min}=0.01 A, and I_{st}=0.002 A	iEM3210 / iEM3215 / iEM3235 / iEM3255 / iEM3265 / iEM3275
	Reactive energy	MID compliance, Class 2 conforming to BS/ EN/ IEC 62053-23 and BS/ EN/ IEC 61557-12 PMD-II/ SD/ SS/ 2 (x1A CT): I_{max}=1.2 A, I_n=1 A, and I_{st}=0.003 A	iEM3235 / iEM3255 / iEM3265 / iEM3275
for x/5A current input	Active energy	Class 0.5S conforming to BS/ EN/ IEC 62053-22 and BS/ EN/ IEC 61557-12 (PMD- II/ SD/ SS/ 0.5 (x5 A CT)): I_{max}=6 A, I_n=5 A, and I_{st}=0.005 A	iEM3200 series
		Class C conforming to BS/ EN 50470-3: I_{max}=6 A, I_n=5 A, I_{min}=0.05 A, and I_{st}=0.005 A	iEM3210 / iEM3215 / iEM3235 / iEM3255 / iEM3265 / iEM3275
	Reactive energy	MID compliance, Class 2 conforming to BS/ EN/ IEC 62053-23 and BS/ EN/ IEC 61557-12 PMD-II/ SD/ SS/ 2 (x5A CT): I_{max}=6 A, I_n=5 A, and I_{st}=0.015 A	iEM3235 / iEM3255 / iEM3265 / iEM3275

Type of Measurement	Value	Meters
NMI	NMI 14/2/88 -25 to 55 deg	iEM3255
	NMI 14/2/89 -25 to 60 deg	iEM3350

MID/MIR

Characteristic	Value	Meters
Electromagnetic environmental class	E2	iEM3110 / iEM3115 / iEM3135 / iEM3155 / iEM3165 / iEM3175 / iEM3210 / iEM3215 / iEM3235 / iEM3255 / iEM3265 / iEM3275 / iEM3310 / iEM3335 / iEM3355 / iEM3365 / iEM3375
Mechanical environmental class	M1	

For MID/MIR compliance, the **Wiring > Type** setting must be set to **3PH4W** or **1PH4W** (Total energy).

The meter complies with the MID 2014/32/EU or MIR SI 2016 No 1153 when installed in cabinets rated for IP51 or better in accordance with the instructions in DOCA0038EN, available on our website. The CE and UKCA declaration documents are available from the website. Search ECDiEM3000 for CE declaration document and UKMIRiEM3000 for UKCA declaration document.

Internal clock

Characteristic	Value	Meters
Type	Quartz crystal based Backup by super capacitor	iEM3115 / iEM3135 / iEM3155 / iEM3165 / iEM3175 / iEM3215 / iEM3235 / iEM3255 / iEM3265 / iEM3275 / iEM3335 / iEM3355 / iEM3365 / iEM3375
Time error	< 2.5 s/day (30 ppm) at 25 °C (77 °F)	
Backup time	3 days at 25 °C (77 °F)	

Modbus communications

Characteristic	Value	Meters
Number of ports	1	iEM3150 / iEM3155 / iEM3250 / iEM3255 / iEM3350 / iEM3355
Labels	0V, D0/-, D1/+, ⊖ (shield)	
Parity	Even, Odd, None	
Baud rate	9600, 19200, 38400	
Isolation	4.0 kV rms	
Wire	2.5 mm² / 14 AWG shielded twisted pair	
Wire strip length	7 mm / 0.28 in	
Torque	0.5 Nm / 4.4 in·lb	

LonWorks communications

Characteristic	Value	Meters
Number of ports	1	iEM3175 / iEM3275 / iEM3375
Isolation	3.75 kV rms	
Wire	2.5 mm²/ 14 AWG shielded twisted pair	
Wire strip length	7 mm / 0.28 in	
Torque	0.5 Nm / 4.4 in·lb	

M-Bus communications

Characteristic	Value	Meters
Number of ports	1	iEM3135 / iEM3235 / iEM3335
Parity	Even, Odd, None	
Baud rate	300, 600, 1200, 2400, 4800, 9600	
Isolation	3.75 kV rms	
Wire	2.5 mm² / 14 AWG shielded twisted pair	
Wire strip length	7 mm / 0.28 in	
Torque	0.5 Nm / 4.4 in·lb	

BACnet communications

Characteristic	Value	Meters
Number of ports	1	iEM3165 / iEM3265 / iEM3365
Labels	0V, D0/-, D1/+, ⊖ (shield)	
Baud rate	9600, 19200, 38400, 57600, 76800	
Isolation	4.0 kV rms	
Wire	2.5 mm² / 14 AWG shielded twisted pair	
Wire strip length	7 mm / 0.28 in	

Characteristic	Value	Meters
Torque	0.5 Nm / 4.4 in·lb	

China Standard Compliance

This product complies with the following standards in China:

iEM3100 series

BS/EN/IEC 62053-21 Electricity metering equipment (a.c.) - Particular requirements - Part 21: Static meters for active energy (classes 1 and 2)

BS/EN/IEC 61557-12 Electrical safety in low voltage distribution systems up to 1 000 V a.c. and 1 500 V d.c. - Equipment for testing, measuring or monitoring of protective measures - Part 12: Performance measuring and monitoring devices

GB/T 17215.211-2006 交流电测量设备-通用要求、试验和试验条件 第11部分：测量设备

GB/T 17215.321-2008 交流电测量设备 特殊要求 第21部分：静止式有功电能表(1级和2级)

iEM3200 series

BS/EN/IEC 62053-22 Electricity metering equipment (a.c.) - Particular Requirements - Part 22: Static meters for active energy (classes 0,2 S and 0,5 S)

BS/EN/IEC 61557-12 Electrical safety in low voltage distribution systems up to 1 000 V a.c. and 1 500 V d.c. - Equipment for testing, measuring or monitoring of protective measures - Part 12: Performance measuring and monitoring devices

GB/T 17215.211-2006 交流电测量设备-通用要求、试验和试验条件 第11部分：测量设备

GB/T 17215.322-2008 交流电测量设备 特殊要求 第22部分：静止式有功电能表（0.2S级和0.5S级）

iEM3300 series

BS/EN/IEC 62053-21 Electricity metering equipment (a.c.) - Particular requirements - Part 21: Static meters for active energy (classes 1 and 2)

BS/EN/IEC 61557-12 Electrical safety in low voltage distribution systems up to 1 000 V a.c. and 1 500 V d.c. - Equipment for testing, measuring or monitoring of protective measures - Part 12: Performance measuring and monitoring devices

Schneider Electric
35 rue Joseph Monier
92500 Rueil Malmaison
France

+ 33 (0) 1 41 29 70 00

www.se.com

© 2026 Schneider Electric. All rights reserved.

DOCA0005EN-16