TeSys

TeSys Control - Hybrid Motor Starter

User Guide

TeSys offers innovative and connected solutions for motor starters.

DOCA0111EN-03
06/2025

Legal Information

The information provided in this document contains general descriptions, technical characteristics and/or recommendations related to products/solutions.

This document is not intended as a substitute for a detailed study or operational and site-specific development or schematic plan. It is not to be used for determining suitability or reliability of the products/solutions for specific user applications. It is the duty of any such user to perform or have any professional expert of its choice (integrator, specifier or the like) perform the appropriate and comprehensive risk analysis, evaluation and testing of the products/solutions with respect to the relevant specific application or use thereof.

The Schneider Electric brand and any trademarks of Schneider Electric SE and its subsidiaries referred to in this document are the property of Schneider Electric SE or its subsidiaries. All other brands may be trademarks of their respective owner.

This document and its content are protected under applicable copyright laws and provided for informative use only. No part of this document may be reproduced or transmitted in any form or by any means (electronic, mechanical, photocopying, recording, or otherwise), for any purpose, without the prior written permission of Schneider Electric.

Schneider Electric does not grant any right or license for commercial use of the document or its content, except for a non-exclusive and personal license to consult it on an "as is" basis.

Schneider Electric reserves the right to make changes or updates with respect to or in the content of this document or the format thereof, at any time without notice.

To the extent permitted by applicable law, no responsibility or liability is assumed by Schneider Electric and its subsidiaries for any errors or omissions in the informational content of this document, as well as any non-intended use or misuse of the content thereof.

Table of Contents

Safety Information....5
About the Document....6
Presentation....8
Introduction....8
Hardware Description....10
Protection Functions....11
Motor Control Applications....13
Motor Control Using a Standard TeSys H Motor Starter....13
Recommended Circuits for Motor Control in Safety Chain Applications Using an STO TeSys H Motor Starter....14
Additional Circuits for Motor Control in Safety Chain Applications Using an STO TeSys H Motor Starter....21
Motor Control Using a Standard or STO Motor Starter for Motors with Brake....24
Operation....26
Commissioning....26
Diagnostic Functions....29
Resetting the TeSys H Motor Starter....32
Protecting the Environment....34
Appendices....35
Combining the TeSys H Motor Starter with Circuit Breakers....35
Combining the TeSys H Motor Starter with Fuses....38
Technical Data....39
Safety Functions....42
Tripping Characteristics....43
Derating Characteristics....44
Maximum Operating Rate for AC53A Duty....47

Safety Information

Important Information

Read these instructions carefully, and look at the equipment to become familiar with the device before trying to install, operate, service, or maintain it. The following special messages may appear throughout this documentation or on the equipment to warn of potential hazards or to call attention to information that clarifies or simplifies a procedure.

The addition of this symbol to a “Danger” or “Warning” safety label indicates that an electrical hazard exists which will result in personal injury if the instructions are not followed.

This is the safety alert symbol. It is used to alert you to potential personal injury hazards. Obey all safety messages that follow this symbol to avoid possible injury or death.

⚠ DANGER

DANGER indicates a hazardous situation which, if not avoided, **will result in** death or serious injury.

⚠ WARNING

WARNING indicates a hazardous situation which, if not avoided, **could result in** death or serious injury.

⚠ CAUTION

CAUTION indicates a hazardous situation which, if not avoided, **could result** in minor or moderate injury.

NOTICE

NOTICE is used to address practices not related to physical injury.

Please Note

Electrical equipment should be installed, operated, serviced, and maintained only by qualified personnel. No responsibility is assumed by Schneider Electric for any consequences arising out of the use of this material.

A qualified person is one who has skills and knowledge related to the construction and operation of electrical equipment and its installation, and has received safety training to recognize and avoid the hazards involved.

About the Document

Document Scope

This document describes the control functions of the TeSys™ Hybrid motor starter.

This document is intended for the following users:

- Design engineers
- System integrators
- System operators
- Maintenance engineers

Validity Note

This guide is valid for all TeSys H motor starters.

The term *TeSys H motor starter* in this guide is used as the abbreviated name of the TeSys Control - Hybrid motor starter.

Online Information

The characteristics of the products described in this document are intended to match the characteristics that are available on www.se.com. As part of our corporate strategy for constant improvement, we may revise the content over time to enhance clarity and accuracy. If you see a difference between the characteristics in this document and the characteristics on www.se.com, consider www.se.com to contain the latest information.

Product Related Information

⚠⚠DANGER

HAZARD OF ELECTRIC SHOCK, EXPLOSION, OR ARC FLASH

To prevent short circuit between primary and secondary sides:

- Disconnect all power before servicing equipment.
- Only use power supply units with safe isolation and PELV, according to EN 50178/VDE 0160 (PELV).

Failure to follow these instructions will result in death or serious injury.

Environmental Data

For product compliance and environmental information, refer to the Schneider Electric Environmental Data Program.

Related Documents

Title of documentation	Reference number
TeSys H - Instruction Sheet	NHA6215000

You can download these technical publications and other technical information from our website at www.se.com/ww/en/download/.

Information on Non-Inclusive or Insensitive Terminology

As a responsible, inclusive company, Schneider Electric is constantly updating its communications and products that contain non-inclusive or insensitive terminology. However, despite these efforts, our content may still contain terms that are deemed inappropriate by some customers.

Trademarks

QR Code is a registered trademark of DENSO WAVE INCORPORATED in Japan and other countries.

Presentation

Introduction

TeSys Master Range

TeSys is an innovative motor control and management solution from the global market leader. TeSys offers connected, efficient products and solutions for switching and protection of motors and electrical loads in compliance with all major global electrical standards.

Presentation of the TeSys H Motor Starter

At only 22.5 mm wide, the TeSys H is an ultra-compact motor starter.

Using hybrid technology that combines electromechanical relays, power solid-state components, and a solid-state overload function, the TeSys H motor starter controls and protects three-phase motors up to 3 kW/500 V or resistive loads up to 9 A/500 V.

NOTICE

FALSE-TRIP HAZARD ON NON-SINUSOIDAL THREE-PHASE VOLTAGES

Do not use the TeSys H motor starter on the power side or load side of a variable speed drive or soft starter.

Failure to follow this instruction can result in false trip.

NOTICE

FALSE-TRIP HAZARD ON SINGLE-PHASE VOLTAGE

Do not use the TeSys H motor starter to control and protect single-phase loads.

Failure to follow this instruction can result in false trip.

Product Range

The following table shows the features available in the product range.

Feature	Value	LZ1H	LZ2H	LZ7H	LZ8H
IEC rating	2.4 A/AC53A, 2.4 A/AC51	x	x	x	x
	6.5 A/AC53A, 9 A/AC51	x	x	x	x
Control voltage	24 Vdc	x	x	x	x
	110 V–230 Vac	x	x	x	x
Type of terminal	Screw	x	x	x	x
	Spring	x	x	x	x
Functions	One direction	x	–	x	–
	Two directions	–	x	–	x
	Overload protection	x	x	x	x
	Safe Torque Off (STO)	–	–	x	x

Motor Control

The TeSys H motor starter is used to switch on and switch off three-phase, asynchronous electrical motors used in single-direction or dual-direction applications. The TeSys H motor starter protects the motors against overheating.

For dual-direction applications, leave a switching time of at least 180 ms when switching between direction 1 (forward) and direction 2 (reverse).

Safe Torque Off (STO)

STO TeSys H motor starters LZ7H and LZ8H are designed for use in safety chain applications.

Safety shutdown can be achieved to the following standards:

- SIL3 according to IEC61508-1
- PLe according to ISO13849-1

TeSys H motor starters LZ7H and LZ8H are ATEX certified as associated components for motor protection.

Hardware Description

Product face	Control terminals	Power terminals
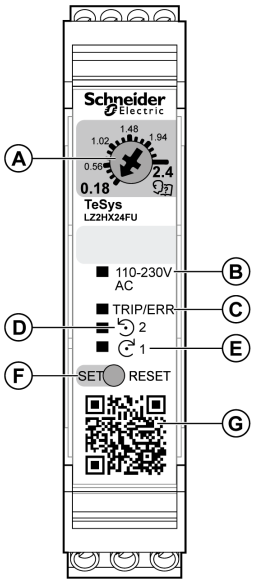	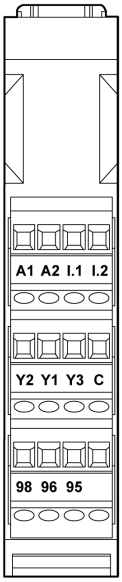	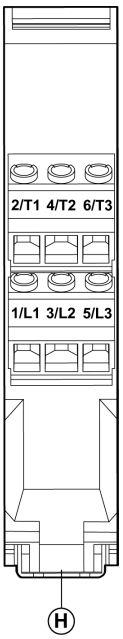
A: Potentiometer to adjust nominal current: • 0.18 to 2.4 for 2.4 A devices • 1.5 to 9 for 6.5 A devices **B**: Auxiliary power supply LED (green), **24 Vdc** or **110-230 Vac** **C**: **TRIP/ERR** trip or internal error LED (red) **D**: LED 2 input **I.2** status (yellow). On LZ2H and LZ8H only. **E**: LED 1 input **I.1** status (yellow) **F**: **SET/RESET** button: Set/manual reset **G**: Product information QR code	**A1**, **A2**: Auxiliary power supply **I1**: Control input, direction 1 **I2**: Control input, direction 2. On LZ2H and LZ8H only. **Y1**: Common point for reset mode **Y2**: Remote reset mode **Y3**: Automatic reset mode **C**: Common point for control inputs. On LZ7H and LZ8H only. **98**, **96**, **95**: Trip and error signaling contact	**2/T1**, **4/T2**, **6/T3**: Motor connection **1/L1**, **3/L2**, **5/L3**: Power inputs **H**: Lock for fixing on DIN rail

Protection Functions

Thermal Overload

The TeSys H motor starter protects three-phase motors against overload. If the current exceeds the set value, the motor starter switches off within the specified tripping time and indicates the cause of the trip through the **TRIP/ERR** LED and the trip and error signaling contact.

NOTE: Overload protection of LZ7H and LZ8H STO starters is ATEX-certified up to SIL 2.

NOTE: Only LZ7H and LZ8H motor starters that bear the Ex marking on the left can be used to protect motors in an explosive atmosphere.

DANGER

HAZARD OF EXPLOSION IN EXPLOSIVE ATMOSPHERE

The device is associated equipment and must not be installed in potentially explosive areas. When installing and operating associated equipment, the applicable safety directives must be observed.

- Observe the safety regulations that are applicable when motors are used in the Ex area (ATEX directive 94/9/EC).
- In circuits in potentially dust-explosive areas of zones 21 and 22, it must be guaranteed that the equipment connected to this circuit complies with category 2D or 3D or is certified as such.
- For safety technical data, refer to this document and certificates (EC-type examination certificate, and other approvals if appropriate).

Conformance/approvals:

- EC type-examination certificate
- Ex II (2) G [Ex e] [Ex d] [Ex px]
- Ex II (2) D [Ex t] [Ex p]
- PTB certification: refer to file number on product nameplate
- Ex marked devices only

Failure to follow these instructions will result in death or serious injury.

WARNING

HAZARD OF INADEQUATE MOTOR PROTECTION

The current setting of the TeSys H motor starter must be adapted in accordance with the motor to be protected.

Failure to follow these instructions can result in death, serious injury, or equipment damage.

Phase Unbalance

The TeSys H motor starter protects three-phase motors against phase unbalance.

- If motor currents differ from each other by more than 33%, the motor starter switches off the motor in 2 minutes and indicates the cause of the trip through the **TRIP/ERR** LED.

- If motor currents differ from each other by more than 67%, the motor starter switches off the motor in 1.8 seconds and indicates the cause of the trip through the **TRIP/ERR** LED.

Phase Loss

NOTICE
HAZARD OF SWITCH-OFF FUNCTION PROBLEMS To conform to ATEX requirements, test the ATEX switch-off function of the LZ7H or LZ8H starters once a year for phase loss conditions in L1 or L3. Switch off must occur in 1.5 to 2 seconds. **Failure to follow these instructions can result in equipment damage.**

The TeSys H motor starter protects three-phase motors against phase loss.

Phase loss is detected through current measurements while the motor is running.

When phase loss occurs, the motor starter switches off the motor after 1.5 to 2 s.

Phase loss is indicated by the **TRIP/ERR** LED and the trip signaling contact.

Stall and Jam Detection

The TeSys H motor starter protects three-phase motors against the following events:

- Jam during startup
- Stall during running

If the current exceeds 45 A for more than 2 s, the TeSys H motor starter switches off the motor and indicates the cause of the trip through the **TRIP/ERR** LED and trip signaling contact.

Diagnostic Functions

The following errors are detected by the TeSys H motor starter:

- Two or more phases are missing.
- No motor is connected.
- On at least two phases, the motor current is lower than the minimum configurable current for more than 2 s.

Motor Control Applications

Motor Control Using a Standard TeSys H Motor Starter

Overview

NOTICE

HAZARD OF EQUIPMENT DAMAGE

- Connect the TeSys H motor starter as specified in the wiring diagrams.
- The cable (**A**), used to connect the motor to the TeSys H, must be shielded if the conductor length is greater than 8 m (26 ft) or in an environment with electromagnetic disturbance.
- The length of conductors to connect terminals **Y1**, **Y2**, and **Y3** must be less than 30 m (98.4 ft).

Failure to follow these instructions can result in equipment damage.

This section provides an example circuit for a DOL motor, using an LZ1H or LZ2H, non-STO, TeSys H motor starter.

Three-Phase Motor Without Brake

This example wiring diagram is for a 3-phase motor without a brake.

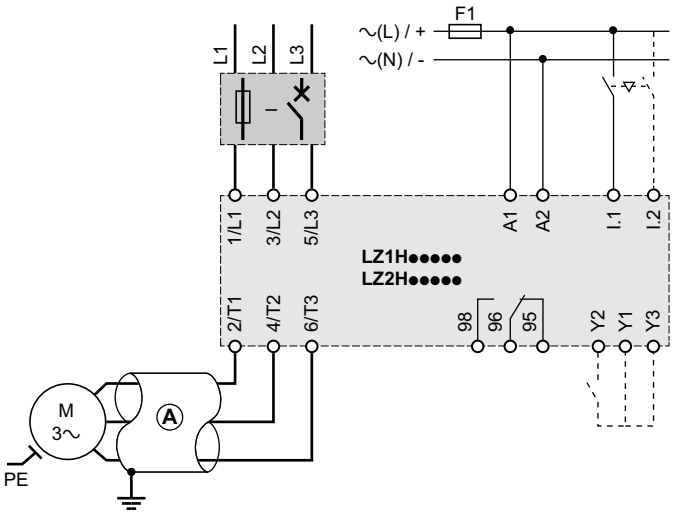

A. Shielded cable, for cable length greater than 8 m (26 ft), or in an environment with electromagnetic disturbance.

One of the following optional reset functions can be wired on terminals **Y1**, **Y2**, and **Y3** :

- Remote reset by a normally open (NO) contact, page 32
- Automatic reset, page 32

Recommended Circuits for Motor Control in Safety Chain Applications Using an STO TeSys H Motor Starter

Overview

NOTICE

HAZARD OF EQUIPMENT DAMAGE

Connect the TeSys H motor starter as specified in the wiring diagrams.

Failure to follow these instructions can result in equipment damage.

This section provides recommended circuits for safe shutdown of motors that use an STO TeSys H motor starter. **In recommended circuits, shutdown is achieved by interrupting the control input on I1 or I2**.

The circuits in this section are for applications where safe shutdown is a normal operating state, such as guard door applications and two-hand control applications.

The following shutdown applications are included in this section:

- Dual-channel applications with a TM3SAC safety processing device - cat.3, PLd according to EN ISO 13849:2006 and SIL 2 according to EN IEC 62061:2005 , page 15
- Dual-channel applications with a TM3SAF53 safety processing device - cat.4, PLE according to EN ISO 13849:2006 and SIL 3 according to EN IEC 62061:2005, page 16
- Dual-channel input and single-channel output with an XPSAC safety processing device - cat.3, PLd according to EN ISO 13849:2006 and SIL 2 according to EN IEC 62061:2005, page 17
- Dual-channel input and dual-channel output with an XPSAF safety processing device - cat.4, PLE according to EN ISO 13849:2006 and SIL 3 according to EN IEC 62061:2005, page 18
- Dual-channel and extended XPSMCM modular safety controller - cat.3, PLd according to EN ISO 13849:2006 and SIL 2 according to EN IEC 62061:2005, page 19
- Dual-channel and extended XPSMCM modular safety controller - cat.4, PLE according to EN ISO 13849:2006 and SIL 3 according to EN IEC 62061:2005, page 20

Implementation

You can implement single-channel or dual-channel configurations. Route the input wiring for the direction 1 or direction 2 activation terminal and the corresponding ground, through the safety processing device.

For dual-channel configurations, leave a switching time of 180 ms when switching between direction 1 (forward) and direction 2 (reverse).

If cross-error exclusion is not allowed, cut off the supply voltage with a dual-channel or two-pole configuration. The supply voltage to the motor starter is cut off with a single-channel configuration. Therefore, use this type of installation for SIL 3 (category 3, category 4) **only** if cross-error exclusions are allowed. For example, use this type of installation when the motor starter and the safety processing device are installed in the same control panel.

Dual-Channel Applications with a TM3SAC Safety Processing Device - Cat.3, PLd According to EN ISO 13849:2006 and SIL 2 According to EN IEC 62061:2005

This dual-channel safety chain application uses the following modules:

- Emergency stop or guard
- TM3SAC safety processing device
- STO TeSys H motor starter

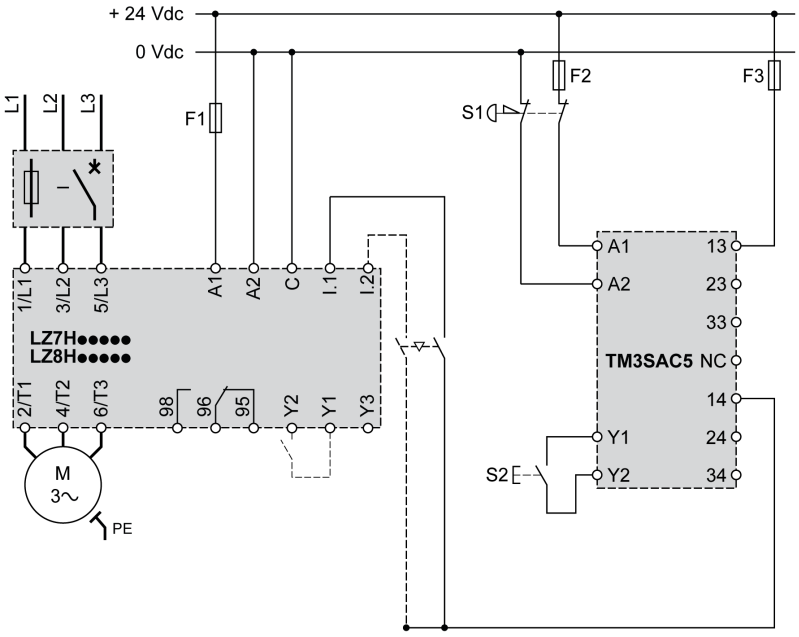

S1 Emergency stop button with two NC contacts, Harmony XB4 or safety limit switches Preventa XCS.

S2 Start button.

NOTE: When a jumper is installed between TM3SAC terminals **Y1** and **Y2**, the motor restarts automatically.

Dual-Channel Applications with a TM3SAF53 Safety Processing Device - Cat.4, PLE According to EN ISO 13849:2006 and SIL 3 According to EN IEC 62061:2005

This dual-channel safety chain application uses the following modules:

- Emergency stop or guard
- TM3SAF53 safety processing device
- STO TeSys H motor starter

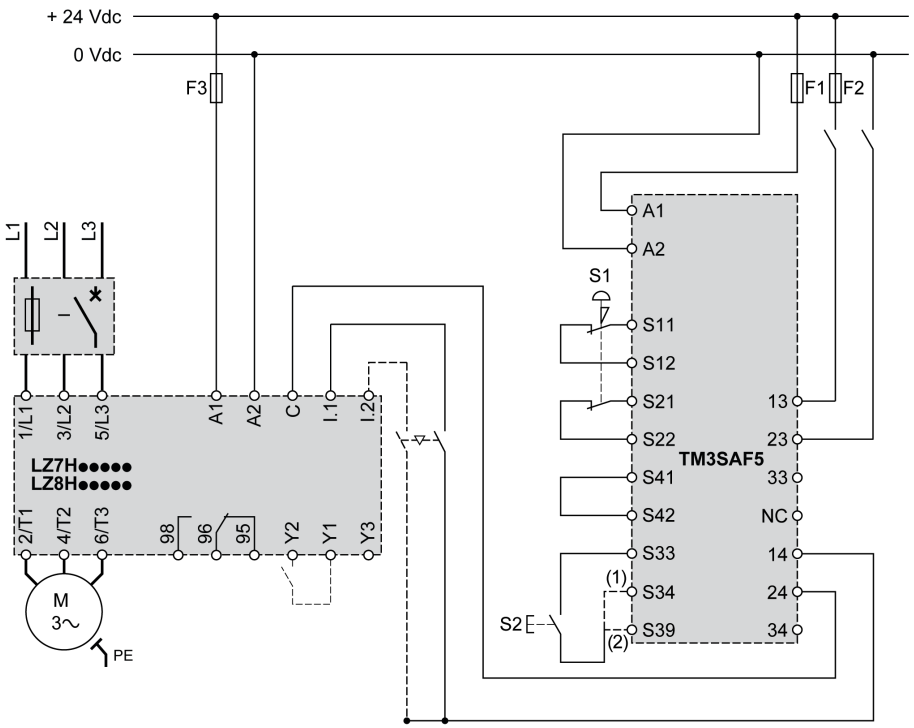

S1 Emergency STOP button with two NC contacts, Harmony XB4 or Preventa XCS safety limit switches

S2 Start button: (1) monitored start, (2) non-monitored start

NOTE: When a jumper is installed between **S33** and **S39**, the motor restarts automatically.

Dual-Channel Input and Single-Channel Output with an XPSAC Safety Processing Device - Cat.3, PLd According to EN ISO 13849:2006 and SIL 2 According to EN IEC 62061:2005

This dual-channel input, single-channel output safety chain application, uses the following modules:

- Emergency stop or guard
- Preventa XPSAC safety processing device
- STO TeSys H motor starter

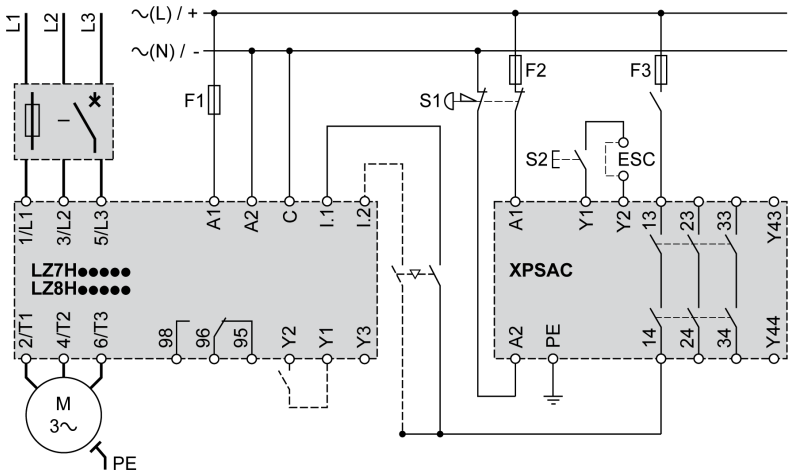

S1 Emergency STOP pushbutton with two NC contacts

S2 Start button

ESC External start conditions

Dual-Channel Input and Dual-Channel Output with an XPSAF Safety Processing Device - Cat.4, PLE According to EN ISO 13849:2006 and SIL 3 According to EN IEC 62061:2005

This dual-channel input, dual-channel output safety chain application uses the following modules:

- Emergency stop or guard
- Preventa XPSAF safety processing device
- STO TeSys H motor starter

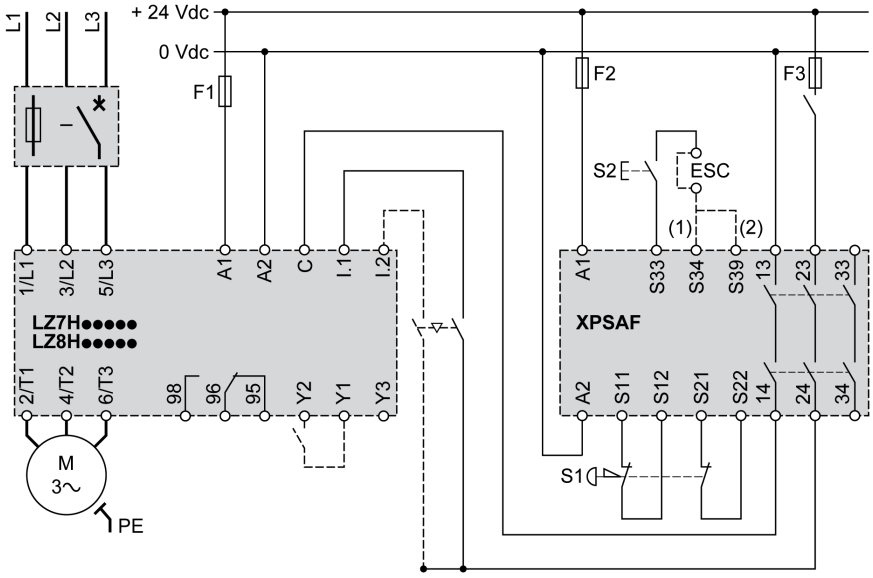

S1 Emergency STOP pushbutton with two NC contacts

S2 Start button

ESC External start conditions: (1) with monitoring of the start button, (2) without monitoring of the start button

Dual-Channel and Extended XPSMCM Modular Safety Controller - Cat.3, PLd According to EN ISO 13849:2006 and SIL 2 According to EN IEC 62061:2005

This dual-channel safety chain application uses the following modules:

- Emergency stop or guard
- XPSMCM modular safety controller
- STO TeSys H motor starter

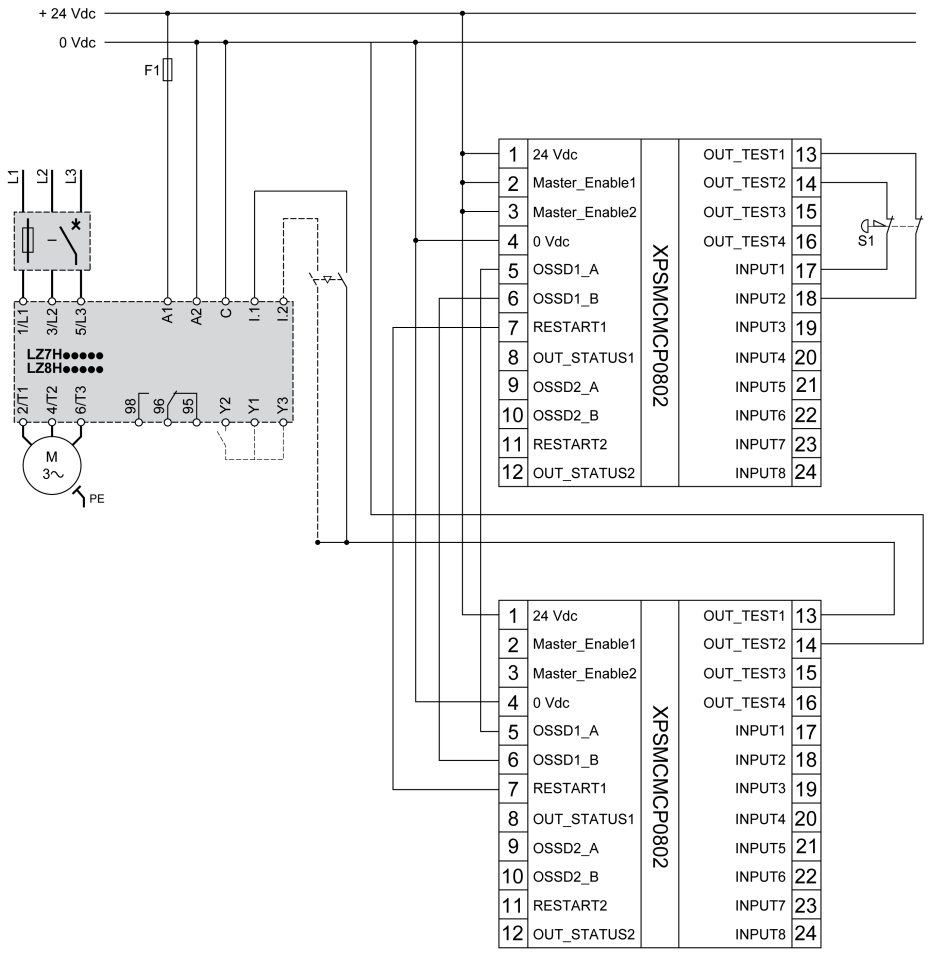

Dual-Channel and Extended XPSMCM Modular Safety Controller - Cat.4, PLE According to EN ISO 13849:2006 and SIL 3 According to EN IEC 62061:2005

This dual-channel safety chain application uses the following modules:

- Emergency stop or guard
- Extended XPSMCM modular safety controller
- STO TeSys H motor starter

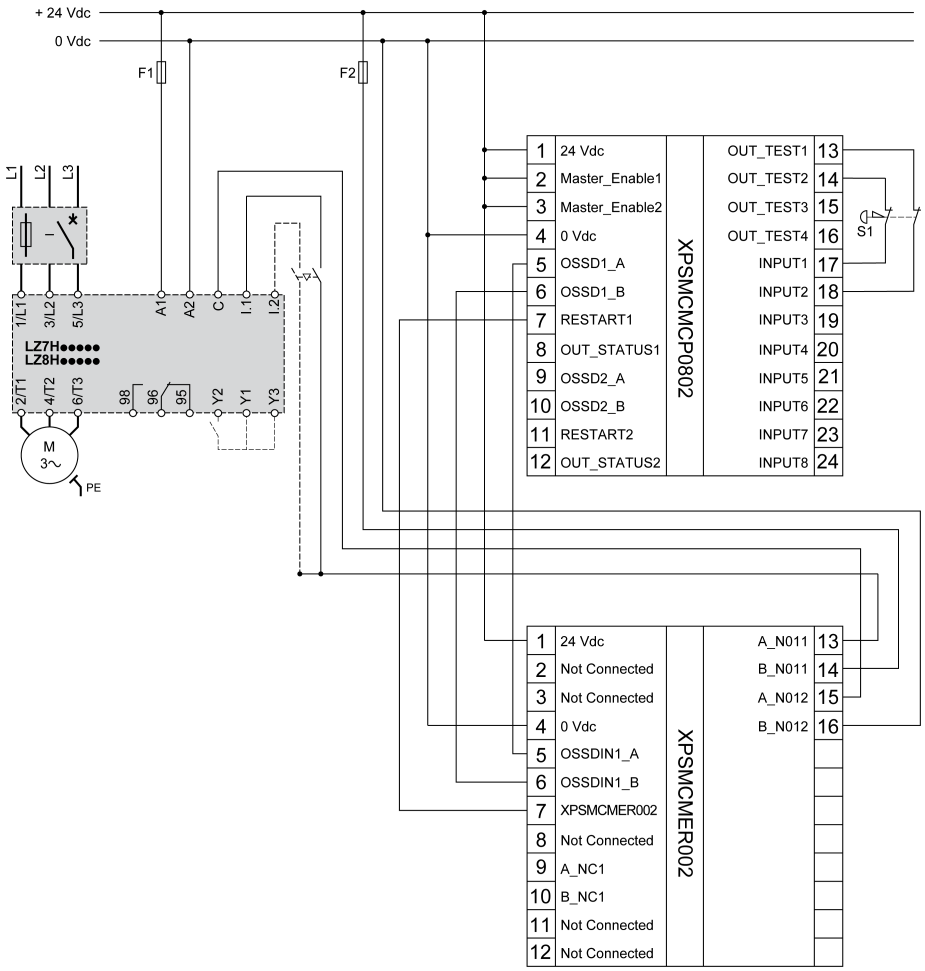

Additional Circuits for Motor Control in Safety Chain Applications Using an STO TeSys H Motor Starter

Overview

NOTICE
HAZARD OF EQUIPMENT DAMAGE Connect the TeSys H motor starter as specified in the wiring diagrams. **Failure to follow these instructions can result in equipment damage.**

This section provides additional circuits for safe shutdown of motors that use an STO TeSys H motor starter. In these additional circuits, shutdown is achieved by cutting off the power supply on terminal **A1** or **A2**. **Repeated shutdown of applications that use these circuits reduces the electrical life of the motor starter to 10,000 cycles.**

The circuits in this section are for emergency situations. As soon as the emergency stop button is pushed, the supply voltage is cut off with a safety processing device. The motor voltage is cut off 25 ms after the rated control voltage is cut off.

The following shutdown applications are included in this section:

- Dual-channel input and single-channel output with an XPSAC safety processing device - cat.3, PLd according to EN ISO 13849:2006 and SIL 2 according to EN IEC 62061:2005, page 22
- Dual-channel input and dual-channel output with an XPSAC safety processing device - cat.3, PLd according to EN ISO 13849:2006 and SIL 2 according to EN IEC 62061:2005, page 23

Implementation

If cross-error exclusion is not allowed, cut off the supply voltage with a dual-channel or two-pole configuration.

The supply voltage to the motor starter is cut off with a single-channel configuration. Therefore, use this type of installation for SIL 3 (category 3, category 4) **only** if cross-error exclusions are allowed. For example, use this type of installation when the motor starter and the safety processing device are installed in the same control panel.

Dual-Channel Input and Single-Channel Output with an XPSAC Safety Processing Device - Cat.3, PLd According to EN ISO 13849:2006 and SIL 2 According to EN IEC 62061:2005

This dual-channel input, single-channel output, safety chain application uses the following modules:

- Emergency stop
- Preventa XPSAC safety processing device
- STO TeSys H motor starter

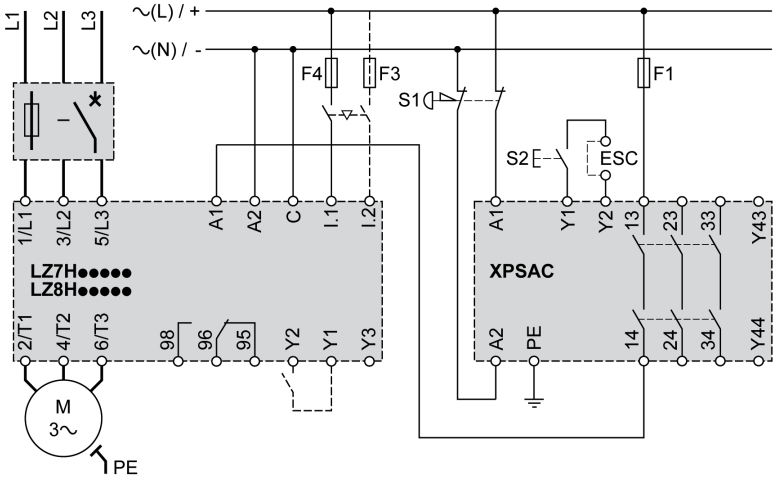

S1 Emergency stop button with two NC contacts

S2 Start button

ESC External start conditions

NOTE: When a jumper is installed between XPSAC terminals **Y1** and **Y2**, the motor restarts automatically.

Dual-Channel Input and Dual-Channel Output with XPSAC Safety Processing Device - Cat.3, PLd According to EN ISO 13849:2006 and SIL 2 According to EN IEC 62061:2005

This dual-channel input, dual-channel output, safety chain application uses the following modules:

- Emergency stop
- Preventa XPSAC safety processing device
- STO TeSys H motor starter

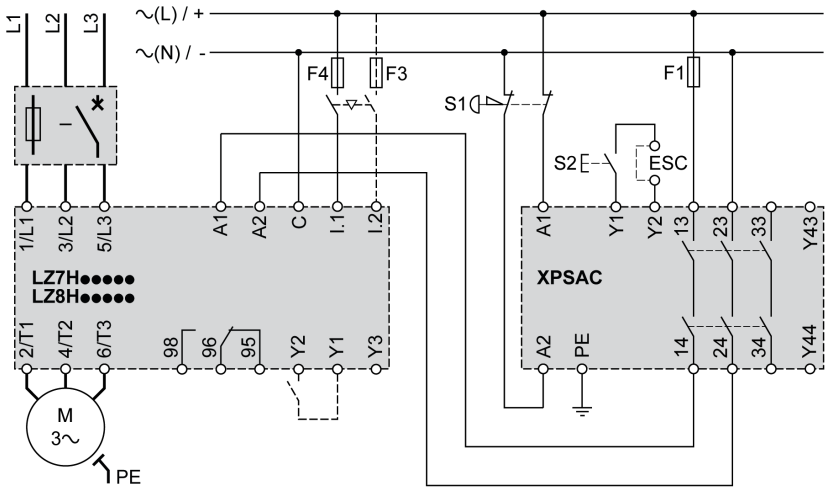

S1 Emergency stop button with two NC contacts

S2 Start button

ESC External start conditions

NOTE: When a jumper is installed between XPSAC terminals **Y1** and **Y2**, the motor restarts automatically.

Motor Control Using a Standard or STO Motor Starter for Motors with Brake

Overview

⚠ CAUTION

OVERHEATING

When you connect and operate motors with built-in brakes, be aware of the hazard of overheating. The energy to release the brakes is taken from the motor connection cables, which can cause asymmetrical power consumption and result in overheating.

Failure to follow these instructions can result in injury or equipment damage.

⚠ CAUTION

UNINTENDED EQUIPMENT OPERATION

The current setting of the TeSys H motor starter must be the nominal current of the motor increased by the value of the brake nominal current.

Failure to follow these instructions can result in injury or equipment damage.

NOTICE

HAZARD OF EQUIPMENT DAMAGE

Connect the TeSys H motor starter as specified in the wiring diagrams.

Failure to follow these instructions can result in equipment damage.

This section provides circuits for motors with a brake. The wiring diagram you use depends on voltage supply of the brake, either 230 Vac or 400 Vac.

Activate external brakes by using a separate contactor, such as TeSys D.

Three-Phase Motor Control with a 230 Vac Brake

The current for braking is taken from one phase and the neutral conductor. Connect the brake to the neutral conductor and to the phase that goes to **T2**.

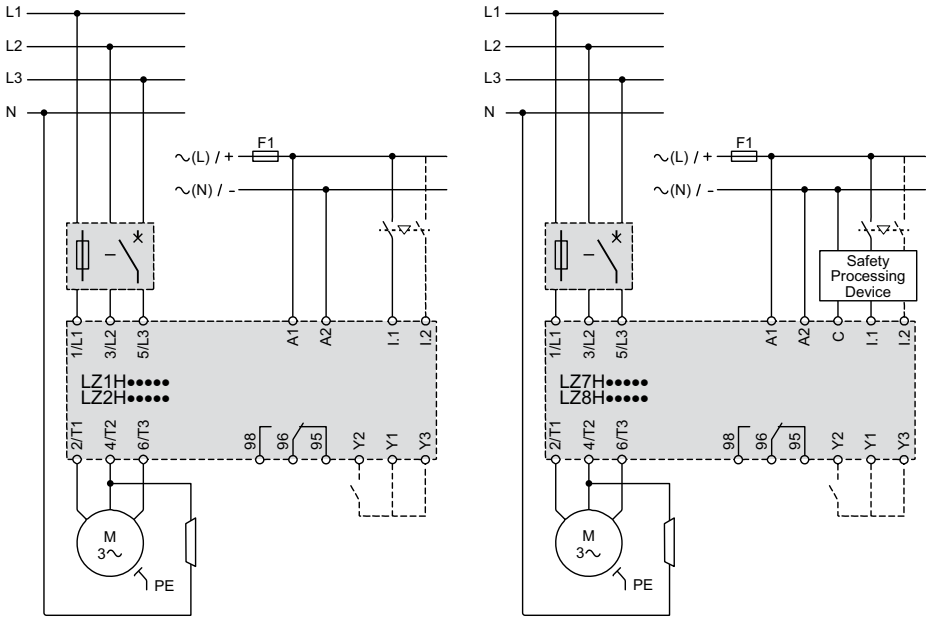

Three-Phase Motor Control with a 400 Vac Brake

The current for braking is taken from two phases. Connect the brake to the phases that go to **T1** and **T3**.

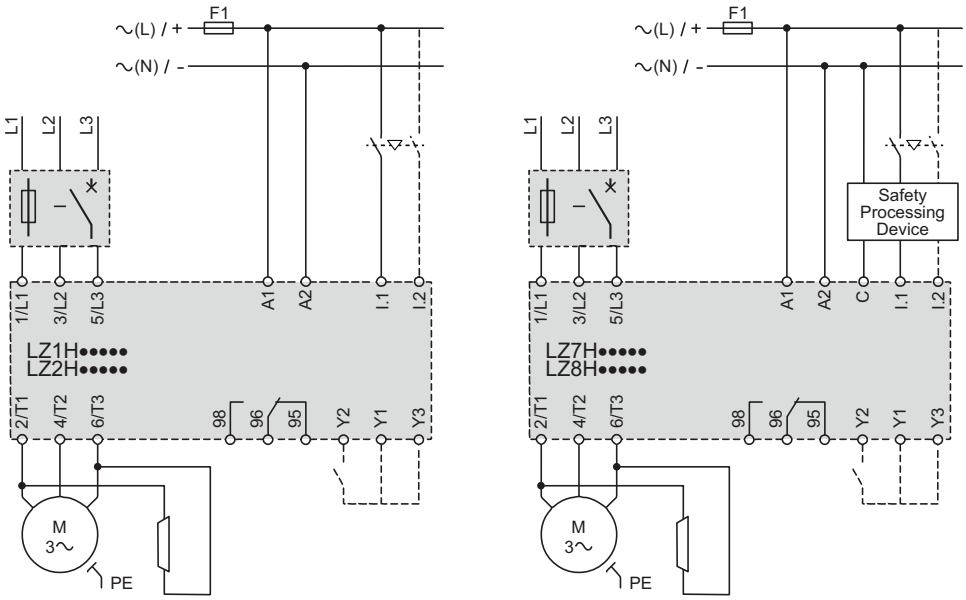

Operation

Commissioning

Power-Up

When you connect the TeSys H motor starter to the control supply, the four LEDs flash for 1 s, stay lit for 1 s, and then go off. The location of the LEDs is shown in the product description, page 10.

When you set the nominal current for the first time, the LEDs light up as indicated in the following procedure. When you change the nominal current, the behavior of the TeSys H motor starter and the sequence of LEDs depend on the state of the TeSys H motor starter.

⚠WARNING

HAZARD OF INADEQUATE MOTOR PROTECTION

The current setting of the TeSys H motor starter must be adapted in accordance with the motor to be protected.

Failure to follow these instructions can result in death, serious injury, or equipment damage.

Setting the Nominal Current for the First Time

Before you start the following procedure, make sure that the following conditions are met:

- The TeSys H motor starter is powered up.
- The **110–230 Vac** or **24 Vdc** LED is on and the other LEDs are off.
- No run commands are on control inputs **I1** or **I2**.

Step	Action
1	Lift the cover on the front of the TeSys H motor starter to access the **SET/RESET** button.
2	Press and hold down the **SET/RESET** button for at least 6 s. After 6 s the **110–230 Vac** or **24 Vdc** LED flashes once.
3	Release the **SET/RESET** button.
4	Turn the potentiometer to select an approximate nominal current, and then fine-tune the position until the LEDs indicate the exact nominal current that you want. The LEDs light up in a combination that indicates the nominal current. See the table of LED combinations and corresponding nominal current, page 27.
5	Press the **SET/RESET** button to save the selected nominal current. The **110–230 Vac** or **24 Vdc** LED comes on and the other LEDs go off.
6	Drop the cover back over the front of the TeSys H motor starter.

NOTE: The factory setting for LZ.H2X4 is 0.18 A. The factory setting for LZ. H6X5 is 1.5 A.

Changing the Nominal Current

Before you start, make sure that the following conditions are met:

- The TeSys H motor starter is powered up.

- The **110–230 Vac** or **24 Vdc** LED is on and the other LEDs are off.
- No run commands are on control inputs **I1** or **I2**.

Step	Action
1	Lift the cover on the front of the TeSys H motor starter to access the **SET/RESET** button.
2	Press and hold down the **SET/RESET** button for at least 6 s. When you are holding the button down, the LEDs flash in a combination that indicates the normal current.
3	Release the **SET/RESET** button. The LEDs stay lit.
4	Turn the potentiometer to select an approximate nominal current, and then fine-tune the position until the LEDs indicate the exact nominal current that you want. See the table of LED combinations and corresponding nominal current, page 27.
5	Press the **SET/RESET** button to save the selected nominal current. The **110–230 Vac** or **24 Vdc** LED comes on and the other LEDs go off.
6	Drop the cover back over the front of the TeSys H motor starter.

Checking the Nominal Current

Before you start, make sure that the following conditions are met:

- The TeSys H motor starter is powered up.
- The **TRIP/ERR** LED is off.
- No run commands are on control inputs **I1** or **I2**.

Step	Action
1	Lift the cover on the front of the TeSys H motor starter to access the **SET/RESET** button.
2	Press and hold down the **SET/RESET** button for 2–5 s. When you are holding the button down, the LEDs flash in a combination that indicates the nominal current. See the table of LED combinations and corresponding nominal current, page 27. **NOTE:** If you hold down the **SET/RESET** button for more than 6 seconds, you start the procedure to set the nominal current after the first time, page 26.
3	Drop the cover back over the front of the TeSys H motor starter.

LED Combination and Corresponding Nominal Current

The following symbols indicate whether an LED is on or off.

□ LED off

■ LED on

Current/LED name	Nominal current/LED combination															
110–230 Vac or **24 Vdc**	□	□	□	□	□	□	□	□	■	■	■	■	■	■	■	■
TRIP/ERR	□	□	□	□	■	■	■	■	□	□	□	□	■	■	■	■
↺ 2	□	□	■	■	□	□	■	■	□	□	■	■	□	□	■	■
↻ 1	□	■	□	■	□	■	□	■	□	■	□	■	□	■	□	■

Current/LED name	**Nominal current/LED combination**															
Setting range 0.18 A...2.4 A	0.18	0.25	0.41	0.56	0.71	0.87	1.02	1.17	1.33	1.48	1.63	1.79	1.94	2.09	2.25	2.4
Setting range 1.5 A...9 A	1.5	2	2.5	3	3.5	4	4.5	5	5.5	6	6.5	7	7.5	8	8.5	9

Diagnostic Functions

Overview

Use diagnostic functions to find the state of the TeSys H motor starter and understand the cause of tripping. When there is a detected error or trip condition, the device is in a safe, disconnected state.

Internal errors cannot be reset and are stored in the device. If more than 14 internal errors are detected, you can no longer operate the device.

Before you can leave the safe, disconnected state, you must reset the trip condition. To reset an external error, push the **SET/RESET** button and release it within 2 s.

The tables in this section describe the combination of LED states, position of signaling contacts, and reset possibilities, in normal conditions and trip or error conditions. The following symbols indicate whether an LED is on, off, or flashing.

■ LED on

□ LED off

⧗ LED flashing at approximately 2 Hz (50:50)

Diagnostics for Normal Conditions

Description	LED combination				Signaling contact	Reset
	110–230 Vac or 24 Vdc	TRIP/ERR	2	1		
Off Not connected to the control supply, or control supply is off.	□	□	□	□	98 96 95	–
Ready to start Supply voltage is available. No trip or detected error. The motor starter switches on when a run command is given.	■	□	□	□	98 96 95	–
Running in direction 1 A command is on **I2**.	■	□	■	□	98 96 95	–
Running in direction 2 A command is on **I1**.	■	□	□	■	98 96 95	–

Diagnostics for Internal Error Conditions

Description	LED combination				Signaling contact	Reset
	110–230 Vac or 24 Vdc	TRIP/ERR	2	1		
Internal error detected. The device must be replaced.	■	■	□	□	98 96 95	Not possible
Checksum error during determination of the thermal system state. The reset mode must be manual or remote. The device does not reset if the reset mode is automatic.	■	⧗	⧗	⧗	98 96 95	Possible

Diagnostics for Trip Conditions

Description	LED combination				Signaling contact	Reset
	110–230 Vac or 24 Vdc	TRIP/ERR	2	1		
Thermal overload protection function						
Overload trip occurred while the motor was running in direction 2. Time to reset is counting down. Reset is impossible.	■	⧗	■	□	98 96 95	Not possible
Overload trip occurred while the motor was running in direction 1. Time to reset is counting down. Reset is impossible.	■	⧗	□	■	98 96 95	Not possible
Overload trip occurred while the motor was running in direction 2. Cool down period is in progress. If reset mode is manual or remote, reset is possible. If reset mode is automatic, device resets automatically after the cool down period (20 minutes).	■	⧗	⧗	□	98 96 95	Possible
Overload trip occurred while the motor was running in direction 1. Cool down period is in progress. If reset mode is manual or remote, reset is possible. If reset mode is automatic, device resets automatically after the cool down period (20 minutes).	■	⧗	□	⧗	98 96 95	Possible
Phase unbalance						
The motor currents differ from each other by more than 33 %. Manual or remote reset is possible immediately.	■	⧗	□	□	98 96 95	Possible

Diagnostics for Error Conditions

The following events can cause error conditions:

- Phase loss: two or more phases are missing.

- No connected motor.
- The motor current is lower than the minimum configurable current for more than 2 seconds, on at least two phases.

Description	LED combination				Signaling contact	Reset
	110–230 Vac or 24 Vdc	TRIP/ERR	2	1		
Error occurred while the motor was running in direction 2. When the phases return, the error is cleared automatically.	⧗	⧗	■	□	98 96 95	Not required
Error occurred while the motor was running in direction 1. When the phases return, the error is cleared automatically.	⧗	⧗	□	■	98 96 95	Not required

Resetting the TeSys H Motor Starter

Manual Reset with the SET/RESET Button

To reset the TeSys H motor starter manually, lift the cover and press the **SET/RESET** button on the front of the device.

Wait for at least 2 minutes after the motor starter has tripped before you reset it.

Remote Reset by a Normally Open (NO) Contact

NOTICE

HAZARD OF EQUIPMENT DAMAGE

The length of conductors used to connect terminals **Y1**, **Y2** and **Y3** must not be more than 30 m (98.4 ft).

Failure to follow these instructions can result in equipment damage.

To reset the TeSys H motor starter remotely, connect a **NO** contact between terminals **Y1** and **Y2**.

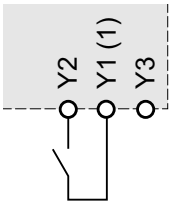

Wait for at least 2 minutes after the starter motor has tripped before you reset it.

(1) The voltage of the common **Y1** is equal to the power supply voltage of the TeSys H motor starter.

Automatic Reset

⚠WARNING

HAZARD OF AUTOMATIC START

- A motor connected to the circuit might start automatically in automatic reset mode.
- For applications in the Ex-protection area, automatic reset mode is not permitted.
- For emergency stop applications, the motor must be prevented from restarting automatically by a higher-level control system.

Failure to follow these instructions can result in death, serious injury, or equipment damage.

NOTICE

HAZARD OF EQUIPMENT DAMAGE

The length of conductors used to connect terminals **Y1**, **Y2** and **Y3** must be less than 30 m (98.4 ft).

Failure to follow these instructions can result in equipment damage.

To reset the TeSys H motor starter automatically, install a jumper between the **Y1** and **Y3** terminals.

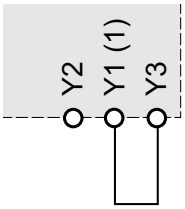

The motor starter resets automatically after 20 minutes. It is possible to reset the motor starter manually or remotely after two minutes, if required.

(1) The voltage of the common **Y1** is equal to the power supply voltage of the TeSys H motor starter.

Protecting the Environment

Package Recycling

The packaging materials from this equipment can be recycled. Help to protect the environment by recycling them in appropriate containers.

Thank you for playing your part in protecting the environment.

End-of-Life Recycling

This product has been optimized to decrease the amount of waste and valorize the components and materials of the product in the usual end of life treatment process.

The design has been achieved so that components are able to enter the usual end-of-life treatment processes as appropriate: depollution if recommended, reuse and/or dismantling if recommended to increase the recycling performances, and shredding for separating the rest of materials.

Appendices

Combining the TeSys H Motor Starter with Circuit Breakers

Overview

⚠⚠WARNING

HAZARDOUS VOLTAGE AT THE MOTOR

- Check the safety function each time the TeSys H motor starter trips.
- Replace the TeSys H motor starter after every short circuit in the case of short-circuit protection according to type-1 coordination, and before restarting the motor.

Failure to follow these instructions can result in death, serious injury, or equipment damage.

For use in North America

⚠⚠WARNING

HAZARD OF FIRE OR ELECTRIC SHOCK

- The opening of the branch-circuit protective device may be an indication that a fault current has been interrupted.
- To reduce the hazard of fire or electric shock, current-carrying parts and the other components of the controller should be examined and replaced if damaged.

Failure to follow these instructions can result in death, serious injury, or equipment damage.

The TeSys H motor starter can be combined with the following magnetic motor circuit breakers:

- GV2L: rotary knob type Ue = 500 V
- GV2LE: rocker lever type Ue = 415 V

Type-1 Coordination According to IEC/EN 60947-4-2 for 415 V Maximum Voltage

TeSys H motor starter	Iq short circuit current (kA)	Circuit breaker reference	Maximum current at 40 °C (A)
LZ••2X4••	50	GV2L/GV2LE04	0.63
LZ••2X4••	50	GV2L/GV2LE05	1
LZ••2X4••	50	GV2L/GV2LE06	1.6
LZ••2X4••	20	GV2L/GV2LE07	2.5
Data is valid at 40 °C			

TeSys H motor starter	Iq short circuit current (kA)	Circuit breaker reference	Maximum current at 40 °C (A)
LZ••6X5••	50	GV2L/GV2LE06	1.6
LZ••6X5••	20	GV2L/GV2LE07	2.5
LZ••6X5••	10	GV2L/GV2LE08	4
LZ••6X5••	7	GV2L/GV2LE10	6.3

TeSys H motor starter	Iq short circuit current (kA)	Circuit breaker reference	Maximum current at 40 °C (A)
LZ••6X5••	7	GV2L/GV2LE14	10
Data is valid at 40 °C			

Type-1 Coordination According to IEC/EN 60947-4-2 for 500 V Maximum Voltage

TeSys H motor starter	Iq short circuit current (kA)	Circuit breaker reference	Maximum current at 40 °C (A)
LZ••2X4••	35	GV2L/GV2LE04	0.63
LZ••2X4••	35	GV2L/GV2LE05	1
LZ••2X4••	35	GV2L/GV2LE06	1.6
LZ••2X4••	10	GV2L/GV2LE07	2.5
Data is valid at 40 °C			

TeSys H motor starter	Iq short circuit current (kA)	Circuit breaker reference	Maximum current at 40 °C (A)
LZ••6X5••	35	GV2L/GV2LE06	1.6
LZ••6X5••	10	GV2L/GV2LE07	2.5
LZ••6X5••	8	GV2L/GV2LE08	4
LZ••6X5••	4	GV2L/GV2LE10	6.3
LZ••6X5••	3	GV2L/GV2LE14	10
Data is valid at 40 °C			

Group Protection with Type-1 Coordination According to IEC/EN 60947-4-2 for 415 V Maximum Voltage

This table gives the maximum short circuit current that can be protected by association of a GV2 circuit breaker and several TeSys H motor starters. The total nominal current of all TeSys H motor starters combined together should not exceed the maximum current of the GV2L/GV2LE circuit breaker associated for group short circuit protection.

TeSys H motor starter		Iq short circuit current (kA)	Circuit breaker reference	Maximum current at 40 °C (A)
2.4 A	6.5 A			
LZ••2X4••	LZ••6X5••	10	GV2L/GV2LE08	4
LZ••2X4••	LZ••6X5••	7	GV2L/GV2LE10	6.3
LZ••2X4••	LZ••6X5••	7	GV2L/GV2LE14	10
–	LZ••6X5••	5	GV2L/GV2LE16	14
–	LZ••6X5••	4	GV2L/GV2LE20	18
–	LZ••6X5••	4	GV2L/GV2LE22	25

Group Protection with Type-1 Coordination According to IEC/EN 60947-4-2 for 500 V Maximum Voltage

This table gives the maximum short circuit current that can be protected by association of a GV2 circuit breaker and several TeSys H motor starters. The total nominal current of all TeSys H motor starters combined together should not exceed the maximum current of the GV2L / GV2LE circuit breaker associated for group short circuit protection.

TeSys H motor starter		Iq short circuit current (kA)	Circuit breaker reference	Maximum current at 40 °C (A)
2.4 A	**6.5 A**			
LZ••2X4••	LZ•H6X5••	8	GV2L/GV2LE08	4
LZ••2X4••	LZ•H6X5••	4	GV2L/GV2LE10	6.3
LZ••2X4••	LZ•H6X5••	3	GV2L/GV2LE14	10
–	LZ•H6X5••	2	GV2L/GV2LE16	14
–	LZ•H6X5••	2	GV2L/GV2LE20	18
–	LZ•H6X5••	2	GV2L/GV2LE22	25

Combining the TeSys H Motor Starter with Fuses

Type-1 Coordination According to IEC/EN 60947-4-2

TeSys H motor starter	Iq short circuit current (kA)	Protection type	Maximum current (A)	Maximum voltage (V)
LZ••2X4••	10	Fuse gG	25	500
LZ••6X5••	10	Fuse gG	25	500
Data is valid at 40 °C.				

For Use in North America: Type-1 Coordination According to IEC/EN 60947-4-2

TeSys H motor starter	Iq short circuit current (kA)	Protection type	Maximum current (A)	Maximum voltage (V)
LZ••2X4••	100	Fuse class J or CC	30	500
LZ••6X5••	100	Fuse class J or CC	30	500
LZ••2X4••	5	Fuse RK5	20	500
LZ••6X5••	5	Fuse RK5	20	500
Data is valid at 40 °C.				

Technical Data

Environmental Characteristics

Characteristic	Description	Value
Rated insulation voltage (Ui)	Conforming to IEC/EN 60947-1 Overvoltage category III Degree of pollution: 2	500 V
Rated impulse withstand voltage (Uimp)	Conforming to IEC/EN 60947-4-2	6 kV (24 Vdc control voltage); 4 kV (110–230 Vac control voltage)
Conformity to standards	–	IEC/EN 60947-4-2, UL 60947-4-1, and the standards used for ATEX (for STO products)
Product certifications	–	CE, UKCA, cULus, ATEX (for STO products), CCC (ongoing)
Degree of protection	Conforming to IEC/EN 60947-1	IP20
Environment category	Conforming to IEC/EN 60947-1	E
Protective treatment	Conforming to IEC/EN 60068-2-30	TC
Ambient air temperature around the device	Storage	-40 °C to +80 °C (-40 °F to 176 °F)
	Operation For information about derating curves according to ambient temperature, refer to derating characteristics, page 44.	-25 °C to +70 °C (-13 °F to 158 °F)
Maximum operating altitude	Without derating	2,000 m (6,561 ft)
Operating positions	–	Vertical axis (horizontal DIN rail)
Flame resistance of plastic parts	Conforming to UL94	V0
	Conforming to IEC/EN 60695-2-12	960 °C (1,760 °F)
Shock resistance 1/2 sine wave = 18 ms	Conforming to IEC/EN 60068-2-27	30 g (30 gn) starter OFF
		30 g (30 gn) starter ON
Vibration resistance 10–150 Hz	Conforming to IEC/EN 60068-2-6	5 g (5 gn) starter OFF
		5 g (5 gn) starter ON
Resistance to electrostatic discharge	Conforming to IEC/EN 61000-4-2	Air discharge: 8 kV
		Contact discharge: 6 kV
Immunity to radiated high-frequency disturbance 80–1 GHz	Conforming to IEC/EN 61000-4-3	20 V/m
Immunity to radiated high-frequency disturbance 1.0–6 GHz (1,0–6 GHz)	Conforming to IEC/EN 61000-4-3	10 V/m
Immunity to fast transient current	Conforming to IEC/EN 61000-4-4	3 kV
Immunity to conducted high-frequency disturbances	Conforming to IEC/EN 61000-4-6	10 V
Radiated emission and conducted	Conforming to CISPR11 and EN55011	Class A
Surge	Conforming to IEC/EN 61000-4-5	1 kV symmetrical, 2 kV asymmetrical

Control and Supply Circuit Characteristics

Characteristic	Description	Value
Rated voltage	AC 50/60 Hz	110–230 V

Characteristic	Description	Value
	DC	24 V
Voltage limits	AC 50/60 Hz	85–253 V
	DC	19.2–30 V
Consumption	–	45 mA for 24 Vdc 12 mA for 230 Vac
Operating time	Switch on	35 ms
	Switch off	40 ms
Voltage dips	–	3 ms
Short time interruptions	–	3 ms

Power Circuit Characteristics

Characteristic	Description	LZ•H2X4••	LZ•H6X5••
Power dissipation	–	0.88/4.1 W	0.88/7 W
Rated operating current (see derating curve)	–	0.18–2.4 A	1.5–9 A
AC51	Conforming to IEC/EN 60947-4-3	0.18–2.4 A	1.5–9 A
AC53a	Conforming to IEC/EN 60947-4-2	0.18–2.4 A	1.5–6.5 A
Electrical life	AC51	30,000,000 operations	30,000,000 operations
	AC53A	30,000,000 operations	30,000,000 operations
Maximum operating rate (ON/OFF 50-50)	AC51	7,200 operations/hr	7,200 operations/hr
	AC53A	Maximum Operating Rate for AC53A Duty, page 47	Maximum Operating Rate for AC53A Duty, page 47
Maximum starting current in AC53A	–	• 52 A for a single product • 40 A for side-by-side products	• 52 A for a single product • 40 A for side-by-side products
Coordination	Conforming to IEC/EN 60947-4-2	Type 1 with circuit breaker	Type 1 with circuit breaker
	Conforming to IEC/EN 60947-4-2	Type 1 with fuses	Type 1 with fuses
Time to restart motor after overload trip	Manual or remote reset	2 minutes	2 minutes
	Automatic reset	20 minutes	20 minutes

Terminal Characteristics

Cable		LZ•H•••••		LZ•H•••3••	
Length of stripped cable	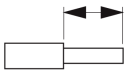	7 mm	0.28 in.	10 mm	0.39 in.
Solid cable without cable end, and 1 conductor	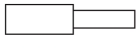	0.25–2.5 mm²	AWG 24–14	0.25–2.5 mm²	AWG 24–14
Solid cable without cable end, and with 2 conductors of the same cross section	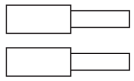	0.25–0.75 mm²	AWG 24–20	–	–

Cable		**LZ•H•••••**		**LZ•H•••3••**	
Flexible cable without cable end, and with 1 conductor		0.25–2.5 mm^2	AWG 24–14	0.25–2.5 mm^2	AWG 24–14
Flexible cable with cable end and 1 conductor	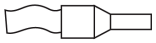	0.25–2.5 mm^2	AWG 24–14	0.25–2.5 mm^2	AWG 24–14
Flexible cables of the same cross section, connected to a single twin-cable end	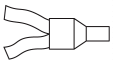	0.25–1.5 mm^2	AWG 24–16	0.25–1.5 mm^2	AWG 24–16
Tightening torque		0.5–0.6 N.m	4.4–5.3 lb-in.	–	–
Flat screwdriver	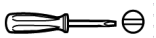	Diameter 3 mm	Diameter 1/8 in.	–	–

Safety Functions

Safety Functions

System conditions	LZ7H or LZ8H 24 Vdc	LZ7H or LZ8H 110/230 Vac
Database for failure rates	SN 29500	SN 29500
System type	Type B	Type B
Standard used	IEC 61508	IEC 61508
Beta factor	1 %	1 %
Mean time to failure (MTTFd) at an ambient temperature 40 °C (104 °F)	39.3	39.1

Safe switch-off	LZ7H or LZ8H 24 Vdc	LZ7H or LZ8H 110/230 Vac
Ambient temperature	40 °C (104 °F)	40 °C (104 °F)
Mean time to failure (MTTFd)	517 years	289 years
Switch-off time	80	100
λsd [FIT] safe, detectable	664	638
λsu [FIT] safe, undetectable	968	935
λdd [FIT] dangerous, detectable	218	388
λdu [FIT] dangerous, undetectable	2.67	6.82
SFF [%] Safe failure fraction	99	99
DCS [%] Diagnostic coverage safe	40.7	40.6
DC [%] Diagnostic coverage	98	98
PFHd probability of a dangerous failure per hour	LZ7H: 2.40 x 10^{-9} LZ8H: 2.67 x 10^{-9}	LZ7H: 6.27 x 10^{-9} LZ8H: 6.82 x 10^{-9}
Safety level	IEC/CEI 61508-1: SIL 3 ISO 13849-1: Category 3 PL e EN 60954-1: Category 3	

ATEX certified as associated device for motor protection in zones 1 and 21	LZ7H or LZ8H 24 Vdc	LZ7H or LZ8H 110/230 Vac
Ambient temperature	40 °C (104 °F)	40 °C (104 °F)
Mean time to failure (MTTFd)	447 years	273 years
Time to trip	As for class 10 A, IEC/CEI 60947-4-2	
λsd [FIT] safe, detectable	637	636
λsu [FIT] safe, undetectable	870	841
λdd [FIT] dangerous, detectable	239	402
λdu [FIT] dangerous, undetectable	17	17
SFF [%] Safe failure fraction	99	99
DCS [%] Diagnostic coverage safe	42.3	43.1
DC [%] Diagnostic coverage	93	95
Safety level	IEC/CEI 61508-1: SIL 2	

More safety information is available on request.

Tripping Characteristics

Tripping Characteristics at 20 °C

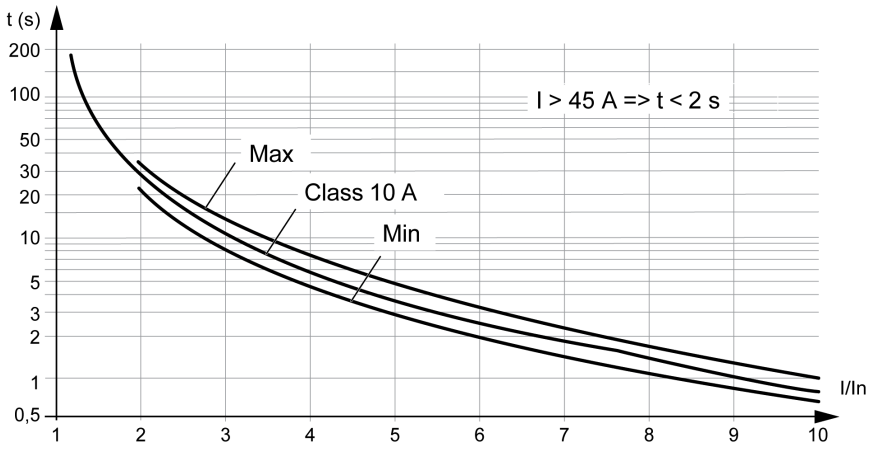

Derating Characteristics

Overview

The curves in this section show the maximum load current for the following parameters:

- Power supply
- Ambient temperature
- Distance between devices

Derating Characteristics for AC53A (Motor Application) Duty by Temperature and Mounting Space for 24 Vdc

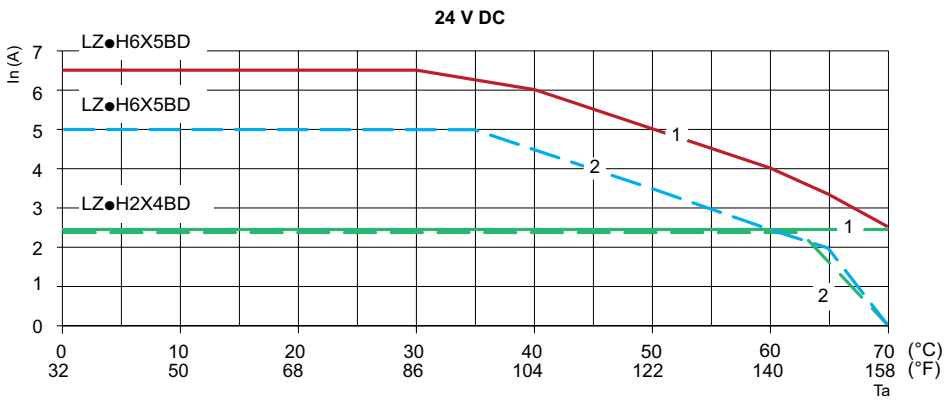

1 Distance between devices is 20 mm (0.51 in)

2 No space between devices

Derating Characteristics for AC53A (Motor Application) Duty by Temperature and Mounting Space for 110–230 Vac

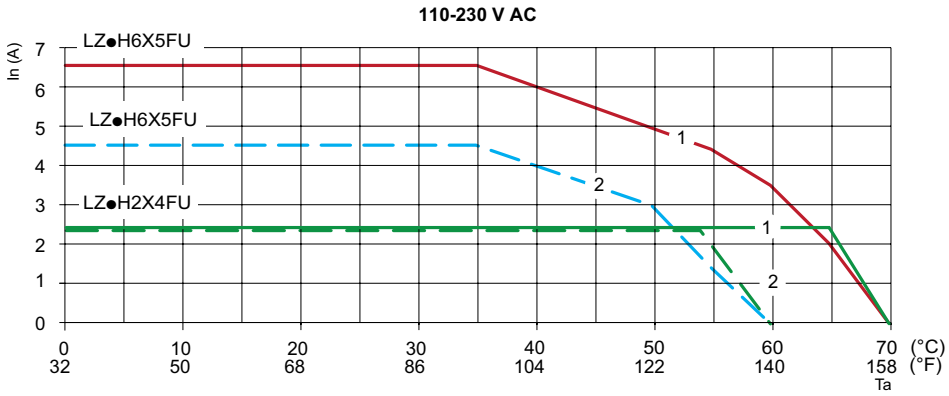

1 Distance between devices is 20 mm (0.51 in)

2 No space between devices

Derating Characteristics for High-Efficiency Motors

TeSys H motor starters are designed for motors with a starting current (Is) that is eight times the nominal current (Ie), according to IEC 60947-4-2. For these motors, Is/Ie = 8.

The following tables list the maximum nominal current for motors where Is/Ie is greater than or equal to 8. If necessary, limit the maximum nominal current of these motors.

LX•2X4					
Ratio of maximum starting current to nominal current (Is/Ie)	8	8.5	9	9.5	10
Nominal current (Ie) in A	2.4	2.4	2.4	2.4	2.4

LX•6X5					
Ratio of maximum starting current to nominal current (Is/Ie)	8	8.5	9	9.5	10
Nominal current (Ie) in A	6.5	6	5.7	5.5	5.2

Derating Characteristics for AC51 (Resistive Load) Duty by Temperature and Mounting Space for 24 Vdc

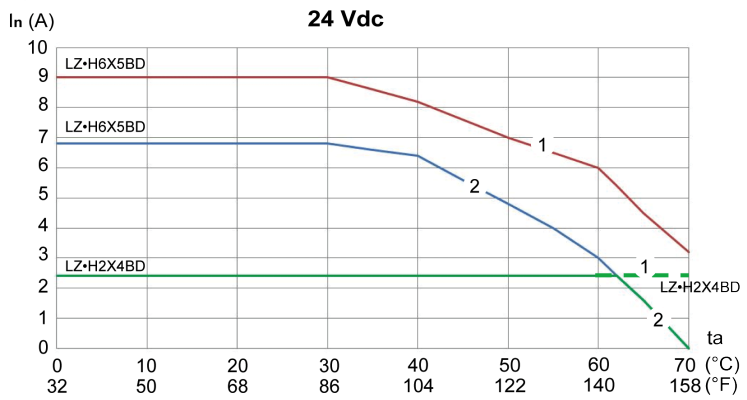

1 Distance between devices is 20 mm (0.51 in)

2 No space between devices

Derating Characteristics for AC51 (Resistive Load) Duty by Temperature and Mounting Space for 110–230 Vac

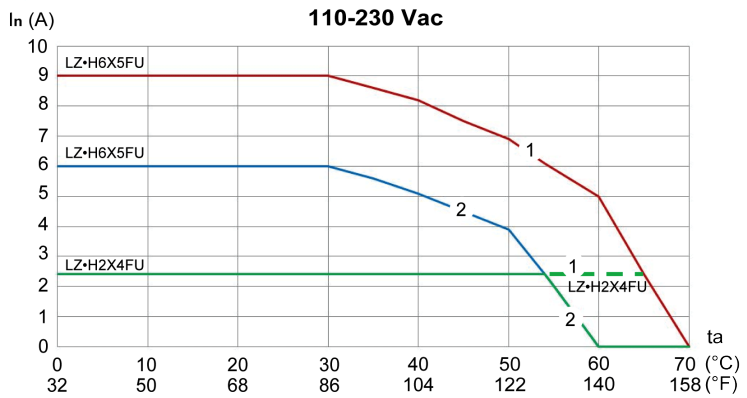

1 Distance between devices is 20 mm (0.51 in)

2 No space between devices

Maximum Operating Rate for AC53A Duty

Overview

Due to the effect of the peak current on the TeSys H monitoring circuit during the starting time, a stop/start sequence should not occur before a certain amount of time. The diagrams below show the minimum duty cycle according to the total period for two typical starting time values.

Starting time of 100 ms

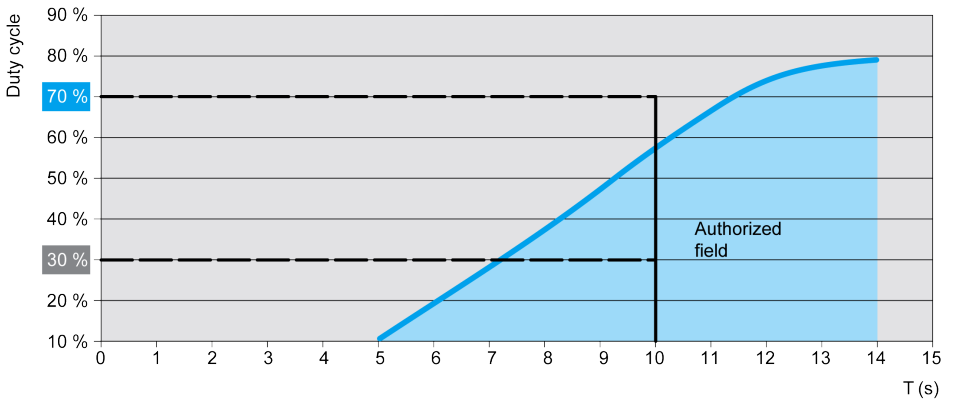

Example for starting time of 100 ms with period T = 10 s.

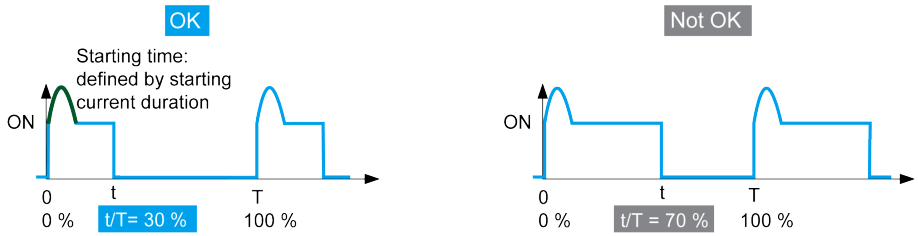

Starting time of 150 ms

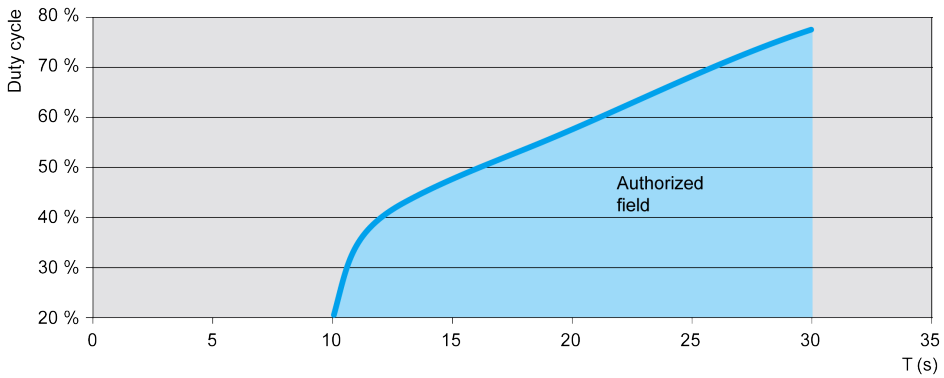

Schneider Electric
35 rue Joseph Monier
92500 Rueil Malmaison
France

+ 33 (0) 1 41 29 70 00

www.se.com

As standards, specifications, and design change from time to time, please ask for confirmation of the information given in this publication.

© 2025 Schneider Electric. All rights reserved.

DOCA0111EN-03