TeSys Active

TeSys island – Digital Motor Management Solution

System, Installation, and Operation Guide

TeSys offers innovative and connected solutions for motor starters.

DOCA0270EN-05
11/2026

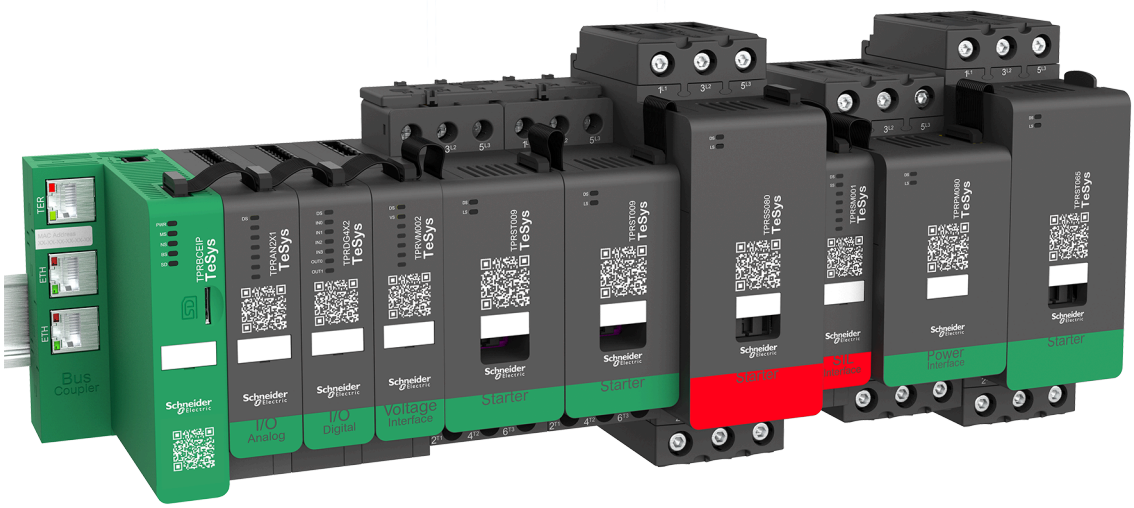

Legal Information

The information provided in this document contains general descriptions, technical characteristics and/or recommendations related to products/solutions.

This document is not intended as a substitute for a detailed study or operational and site-specific development or schematic plan. It is not to be used for determining suitability or reliability of the products/solutions for specific user applications. It is the duty of any such user to perform or have any professional expert of its choice (integrator, specifier or the like) perform the appropriate and comprehensive risk analysis, evaluation and testing of the products/solutions with respect to the relevant specific application or use thereof.

The Schneider Electric brand and any trademarks of Schneider Electric and its subsidiaries referred to in this document are the property of Schneider Electric or its subsidiaries. All other brands may be trademarks of their respective owner.

This document and its content are protected under applicable copyright laws and provided for informative use only. No part of this document may be reproduced or transmitted in any form or by any means (electronic, mechanical, photocopying, recording, or otherwise), for any purpose, without the prior written permission of Schneider Electric.

Schneider Electric does not grant any right or license for commercial use of the document or its content, except for a non-exclusive and personal license to consult it on an "as is" basis.

Electrical equipment should be installed, operated, serviced, and maintained only by qualified personnel. No responsibility is assumed by Schneider Electric for any consequences arising out of the use of this material.

Schneider Electric reserves the right to make changes or updates with respect to or in the content of this document or the format thereof, at any time without notice.

To the extent permitted by applicable law, no responsibility or liability is assumed by Schneider Electric and its subsidiaries for any errors or omissions in the informational content of this document, as well as any non-intended use or misuse of the content thereof.

.

Table of Contents

Table of Contents....3
Safety Information....7
About the Book....8
Document Scope....8
Validity Note....8
Related Documentation....9
Precautions....10
Qualified Personnel....11
Intended Use....11
Cybersecurity....11
TeSys island Presentation....15
Introduction to TeSys island....16
TeSys Master Range....16
TeSys island Concept....16
Industrial Communication Protocols....17
TeSys island Specifications....18
Hardware Description....26
Bus Coupler....26
Power Devices....28
SIL Interface Module....32
I/O Modules....34
Voltage Interface Module....37
Digital Tools....38
TeSys island Configurator....38
Engineering Tools....38
Operation and Maintenance Tool....39
Fieldbus Communication....40
Industrial Communication Protocols....40
Degraded Mode....40
TeSys Avatar Functions....42
TeSys Avatar Introduction....43
Avatar Definition....43
List of TeSys Avatars....44
Avatar Logic and Functionality....48
Process Variables....48
Bypass Functionality....48
Manual Mode Override....48
Pump & Ventilator Avatars....48
Conveyor Avatars....51
Load Avatars....52
Avatar Predictive Alarms....54
Avatar Functional Description....58
Avatar Function Allocation....58
Protection Functions....60
About Motor Start and Run States....61
Protection Settings....63
Load Protection Functions....66
Thermal Protection Functions....72

Electrical Protection Functions 73
Alarm and Trip Counters 76
Trip Reset Command 77
Trip Auto-Reset Function 79
Monitoring Data 81
Upstream Voltage Presence 81
Current Monitoring 81
Energy Monitoring 81
Installation and Wiring 83
Installation 84
Dimensions 84
Weights 91
General Installation Guidelines 91
Mounting Positions 95
Required Tools 98
Installing the Bus Coupler 100
Mounting the Bus Coupler on DIN Rail 100
Micro SD Card 100
Installing Standard Starters and SIL Starters 102
Mounting Power Interface Modules on DIN Rail 114
Mounting the I/O and Interface Modules on DIN Rail 115
Installation Verification 115
Connecting the Flat Cables 116
Wiring 117
Wiring Precautions 117
Wiring Guidelines 118
Electrical Characteristics 119
Bus Coupler Wiring 120
Power Module Wiring 121
I/O Module Wiring 123
Avatar I/O Port Assignments 124
Voltage Interface Module Wiring 125
SIL Interface Module Wiring 126
Accessories Cabling 127
Installation Setup 128
Introduction 128
Configuration Tools 129
Powering Up the Island 130
Connecting to TeSys™ island 132
Connecting with TeSys™ island DTM 132
Connecting with the OMT 132
Setting the TeSys island IPv4 Address via OMT 134
Connecting to TeSys™ island with SoMove™ Software 135
Importing the Project File to the DTM 135
Configuring the Island Parameters 136
Connecting to TeSys island with SoMove Software 137
Loading the Project File to the Island 138
Verifying the System Installation in Test Mode 139
Verifying the TeSys island Configuration 139
Verifying the System Wiring 140
Apply Mains Power 140

Force Mode 141
Disconnect Mains Power 142
Operations 143
OMT Operations 144
Operational Behavior 144
System States 144
Connecting Your Tablet and Using the OMT 147
Connecting to the OMT Using the Default IP Address 149
User Preferences 151
Control Panel 153
Avatar View Panel 155
Island View Panel 162
Diagnostics Panel 168
Energy Monitoring Panel 170
Settings Panel 173
Admin Options Panel 176
Powering On the island 182
Powering Off the island 183
Module LEDs 184
Updating the Firmware on the Bus Coupler 193
Device Replacement 194
Alarms and Events 200
System Logs 207
Troubleshooting 215
Appendix 219
Avatar Composition 220
Avatar Wiring Schematics and Accessory Diagrams 224
Bus Coupler with I/O Modules and Voltage Interface Modules 225
Switch 225
Switch - SIL Stop, W. Cat 1/2 226
Switch - SIL Stop, W. Cat 3/4 227
Digital I/O 227
Analog I/O 228
Power Interface without I/O (Measure) 228
Power Interface with I/O (Control) 229
Motor One Direction 229
Motor One Direction - SIL Stop, W. Cat 1/2 230
Motor One Direction - SIL Stop, W. Cat 3/4 231
Motor Two Directions 232
Motor Two Directions - SIL Stop, W. Cat 1/2 233
Motor Two Directions - SIL Stop, W. Cat 3/4 234
Motor Y/D One Direction 235
Motor Y/D Two Directions 236
Motor Two Speeds 237
Motor Two Speeds with Dahlandar Option 238
Motor Two Speeds - SIL Stop, W. Cat 1/2 239
Motor Two Speeds - SIL Stop, W. Cat 3/4 240
Motor Two Speeds Two Directions 241
Motor Two Speeds Two Directions - SIL Stop, W. Cat 1/2 242

Motor Two Speeds Two Directions - SIL Stop, W. Cat 3/4 243
Resistor 244
Power Supply 244
Transformer 245
Pump & Ventilator 245
Conveyor One Direction 246
Conveyor One Direction - SIL Stop, W. Cat 1/2 247
Conveyor Two Directions 248
Conveyor Two Directions - SIL Stop, W. Cat 1/2 249

Safety Information

Important Information

Read these instructions carefully, and look at the equipment to become familiar with the device before trying to install, operate, service, or maintain it. The following special messages may appear throughout this documentation or on the equipment to warn of potential hazards or to call attention to information that clarifies or simplifies a procedure.



The addition of this symbol to a “Danger” or “Warning” safety label indicates that an electrical hazard exists which will result in personal injury if the instructions are not followed.



This is the safety alert symbol. It is used to alert you to potential personal injury hazards. Obey all safety messages that follow this symbol to avoid possible injury or death.

⚠ DANGER

DANGER indicates a hazardous situation which, if not avoided, **will result in** death or serious injury.

⚠ WARNING

WARNING indicates a hazardous situation which, if not avoided, **could result in** death or serious injury.

⚠ CAUTION

CAUTION indicates a hazardous situation which, if not avoided, **could result** in minor or moderate injury.

NOTICE

NOTICE is used to address practices not related to physical injury.

Please Note

Electrical equipment should be installed, operated, serviced, and maintained only by qualified personnel. No responsibility is assumed by Schneider Electric for any consequences arising out of the use of this material.

A qualified personnel is one who has skills and knowledge related to the construction and operation of electrical equipment and its installation, and has received safety training to recognize and avoid the hazards involved.

About the Book

Document Scope

This user guide introduces the TeSys island. The guide describes the main functions, mechanical installation, wiring, commissioning, and how to operate and maintain the TeSys island.

Validity Note

This guide is valid for all TeSys island configurations. The availability of some functions described in this guide depends on the communication protocol used and the physical modules installed on the TeSys island.

For product compliance and environmental information, refer to the Schneider Electric Environmental Data Program.

For technical characteristics of the physical modules described in this guide, go to www.se.com.

The technical characteristics presented in this guide should be the same as those that appear online. We may revise content over time to improve clarity and accuracy. If you see a difference between the information contained in this guide and online information, use the online information.

Related Documentation

Document title	Description	Document number
TeSys island – EtherNet/IP™ – Quick Start and Function Block Library Guide	Describes how to integrate the TeSys island and the information of TeSys island library used in the Rockwell Software® Studio 5000® EtherNet/IP environment.	DOCA0271EN
TeSys island – PROFINET and PROFIBUS – Quick Start and Function Block Library Guide	Describes how to integrate the TeSys island and the information of TeSys island library used in the Siemens™ TIA Portal environment.	DOCA0272EN
TeSys island – Functional Safety Guide	Describes the Functional Safety features of TeSys island.	8536IB1904
TeSys island – Third Party Function Block Guide	Contains the information needed to create function blocks for third party hardware.	8536IB1905
TeSys island – DTM Online Help Guide	Describes how to install and use various functions of TeSys island configuration software and how to configure the parameters of TeSys island.	8536IB1907
TeSys island – Product Environmental Profile	Describes constituent materials, recyclability potential, and environmental impact information for the TeSys island.	ENVPEP1904009
TeSys island – Product End of Life Instructions	Contains end of life instructions for the TeSys island.	ENVEOLI1904009
TeSys island – Instruction Sheet, Bus Coupler, TPRBCEIP	Describes how to install the TeSys island Ethernet/IP bus coupler.	MFR44097
TeSys island – Instruction Sheet, Bus Coupler, TPRBCPFN	Describes how to install the TeSys island PROFINET bus coupler.	MFR44098
TeSys island – Instruction Sheet, Bus Coupler, TPRBCPFB	Describes how to install the TeSys island PROFIBUS DP bus coupler.	GDE55148
TeSys island – Instruction Sheet, Starters and Power Interface Modules, Size 1 and 2	Describes how to install size 1 and 2 TeSys island starters and power interface modules.	MFR77070
TeSys island – Instruction Sheet, Starters and Power Interface Modules, Size 3	Describes how to install size 3 TeSys island starters and power interface modules.	MFR77085
TeSys island – Instruction Sheet: Input/Output Modules	Describes how to install the TeSys island analog and digital I/O modules.	MFR44099
TeSys island – Instruction Sheet: SIL Interface and Voltage Interface Modules	Describes how to install the TeSys island voltage interface modules and SIL(1) interface modules.	MFR44100
TeSys island – ATEX Adaptation Guide	Describes the ATEX adaptation for TeSys island	DOCA0452EN

(1) Safety Integrity Level according to standard IEC 61508.

Precautions

Read and understand the following precautions before performing any procedures in this guide.

⚠⚠DANGER

HAZARD OF ELECTRIC SHOCK, EXPLOSION, OR ARC FLASH

- This equipment must only be installed and serviced by qualified electrical personnel.
- Turn off all power supplying this equipment before working on or inside this equipment.
- Use only the specified voltage when operating this equipment and any associated products.
- Always use a properly rated voltage sensing device to confirm power is off.
- Use appropriate interlocks where personnel and/or equipment hazards exist.
- Power line circuits must be wired and protected in compliance with local and national regulatory requirements.
- Apply appropriate personal protective equipment (PPE) and follow safe electrical work practices per NFPA 70E, NOM-029-STPS, or CSA Z462 or local equivalent.

Failure to follow these instructions will result in death or serious injury.

⚠WARNING

UNINTENDED EQUIPMENT OPERATION

- For complete instructions about functional safety, refer to the TeSys™ island Functional Safety Guide, 8536IB1904.
- Do not disassemble, repair, or modify this equipment. There are no user serviceable parts.
- Install and operate this equipment in an enclosure appropriately rated for its intended application environment.
- Each implementation of this equipment must be individually and thoroughly tested for proper operation before being placed into service.

Failure to follow these instructions can result in death, serious injury, or equipment damage.

⚠ **WARNING:** This product can expose you to chemicals including Antimony oxide (Antimony trioxide), which is known to the State of California to cause cancer. For more information go to www.P65Warnings.ca.gov.

Qualified Personnel

Only appropriately trained personnel who are familiar with and understand the content of this guide and all other related product documentation are authorized to work on and with this product.

The qualified personnel must be able to detect possible hazards that may arise from modifying parameter values and generally from mechanical, electrical, or electronic equipment. The qualified personnel must be familiar with the standards, provisions, and regulations for the prevention of industrial accidents, which they must observe when designing and implementing the system.

The use and application of the information contained in this guide requires expertise in the design and programming of automated control systems. Only you, the user, machine builder, or integrator, can be aware of all the conditions and factors present during installation, setup, operation, and maintenance of the machine or process, and can therefore determine the automation and associated equipment and the related safeties and interlocks which can be effectively and properly used when selecting automation and control equipment, and any other related equipment or software, for a particular application. You must also consider applicable local, regional, or national standards and/or regulations.

Pay particular attention to conformance with any safety information, electrical requirements, and normative standards that apply to your machine or process in the use of this equipment.

Intended Use

The products described in this guide, together with software, accessories, and options, are starters for low-voltage electrical loads, intended for industrial use according to the instructions, directions, examples, and safety information contained in the present document and other supporting documentation.

The product may only be used in compliance with all applicable safety regulations and directives, the specified requirements, and the technical data.

Before using the product, you must perform a risk assessment of the planned application. Based on the results, appropriate safety-related measures must be implemented.

Since the product is used as a component of a machine or process, you must ensure the safety of persons by means of the overall system design.

Operate the product only with the specified cables and accessories. Use only genuine accessories and spare parts.

Any use other than the use explicitly permitted is prohibited and can result in unanticipated hazards.

Cybersecurity

Introduction

Cybersecurity is a branch of network administration that addresses attacks on or by PCs and through PC networks that can result in accidental or intentional disruptions. The objective of cybersecurity is to help provide increased levels of protection for information and physical assets from theft, corruption, misuse, or accidents while maintaining access for their intended users.

No single cybersecurity approach is adequate. Schneider Electric recommends a defense-in-depth approach. Conceived by the National Security Agency (NSA), this approach layers the network with security features, appliances, and processes. The basic components of this approach are:

- Risk assessment
- Security plan built on the results of the risk assessment
- Multi-phase training campaign
- Physical separation of the industrial networks from enterprise networks using a demilitarized zone (DMZ) and the use of firewalls and routing to establish other security zones
- System access control
- Device hardening
- Network monitoring and maintenance

This section defines elements that help you configure a system that is less susceptible to cyber attacks. For detailed information on the defense-in-depth approach, refer to the *Recommended Cybersecurity Best Practices* on the Schneider Electric website.

Schneider Electric's Approach on Cybersecurity

Schneider Electric adheres to industries best practice in the development and implementation of control systems. This includes a defense-in-depth approach to secure an industrial control system. This approach places the controllers behind one or more firewalls to restrict access to authorized personnel and protocols only.

⚠WARNING

UNAUTHENTICATED ACCESS AND SUBSEQUENT UNAUTHORIZED OPERATION

- Evaluate whether your equipment or complete environment are connected to your critical infrastructure and, if so, take appropriate steps in terms of prevention, based on defense-in-depth, before connecting the automation system to any network.
- Limit the number of devices connected to a network inside your company.
- Isolate your industrial network from other networks inside your company.
- Protect any network against unintended access by using firewalls, VPN, or other, proven security measures.
- Monitor activities within your systems.
- Prevent subject devices from direct access or direct link by unauthorized parties or unauthenticated actions.
- Prepare a recovery plan including backup of your system and process information.

Failure to follow these instructions can result in death, serious injury, or equipment damage.

Cyber Threats

Cyber threats are deliberate actions or accidents that can disrupt the normal operations of PCs and PC networks. These actions can be initiated from within the physical facility or from an external location. Security challenges for the control environment include:

- Diverse physical and logical boundaries
- Multiple sites and large geographic spans
- Adverse effects of security implementation on process availability
- Increased exposure to worms and viruses migrating from business systems to control systems as business-control communications become more open

- Increased exposure to malicious software from USB devices, vendor and service technician laptops, and the enterprise network
- Direct impact of control systems on physical and mechanical systems

Sources of Cyber Attacks

Implement a cybersecurity plan that accounts for various potential sources of cyber attacks and accidents, including:

Source	Description
Internal	• Inappropriate employee or contractor behavior • Disgruntled employee or contractor
External opportunistic (non-directed)	• Script kiddies(1) • Recreational hackers • Virus writers
External deliberate (directed)	• Criminal groups • Activists • Terrorists • Agencies of foreign states
Accidental	

(1) Slang term for hackers who use malicious scripts written by others without necessarily possessing a comprehensive understanding of how the script works or its potential impact on a system.

A deliberate cyber attack on a control system may be launched to achieve a number of malicious results, including:

- Disrupt the production process by blocking or delaying the flow of information.
- Damage, disable, or shut down equipment to negatively impact production or the environment.
- Modify or disable safety systems to cause intentional harm.

How Attackers Gain Access

A cyber attacker bypasses the perimeter defenses to gain access to the control system network. Common points of access include:

- Dial-up access to remote terminal unit (RTU) devices
- Supplier access points (such as technical support access points)
- IT-controlled network products
- Corporate virtual private network (VPN)
- Database links
- Poorly configured firewalls
- Peer utilities

Reporting and Management

To submit a cybersecurity question, report security issues, or to get the latest news from Schneider Electric, visit our Schneider Electric website.

TeSys island Presentation

What’s in This Part

Introduction to TeSys island 16
Hardware Description 26
Digital Tools 38
Fieldbus Communication 40

Introduction to TeSys island

What's in This Chapter

TeSys Master Range....16
TeSys island Concept....16
Industrial Communication Protocols....17
TeSys island Specifications 18

TeSys Master Range

TeSys is an innovative motor control and management solution from the global market leader. TeSys offers connected, efficient products and solutions for switching and protection of motors and electrical loads in compliance with all major global electrical standards.

TeSys island Concept

TeSys island is a modular, multifunctional system providing integrated functions inside an automation architecture, primarily for the direct control and management of low-voltage loads. TeSys island can switch, help protect, and manage motors and other electrical loads up to 80 A (AC1) installed in an electrical control panel.

This system is designed around the concept of TeSys avatars. These avatars:

- Represent both the logical and physical aspects of the automation functions.
- Determine the configuration of the TeSys island.

The logical aspects of the TeSys island are managed with software tools, covering all phases of product and application lifecycle: design, engineering, commissioning, operation, and maintenance.

The physical TeSys island consists of a set of devices installed on a single DIN rail and connected together with flat cables providing the internal communication between modules. The external communication with the automation environment is made through a single bus coupler module, and the TeSys island is seen as a single node on the network. The other modules include starters, power interface modules, analog and digital I/O modules, voltage interface modules, and SIL (Safety Integrity Level according to standard IEC 61508) interface modules, covering a wide range of operational functions.

TeSys island Overview

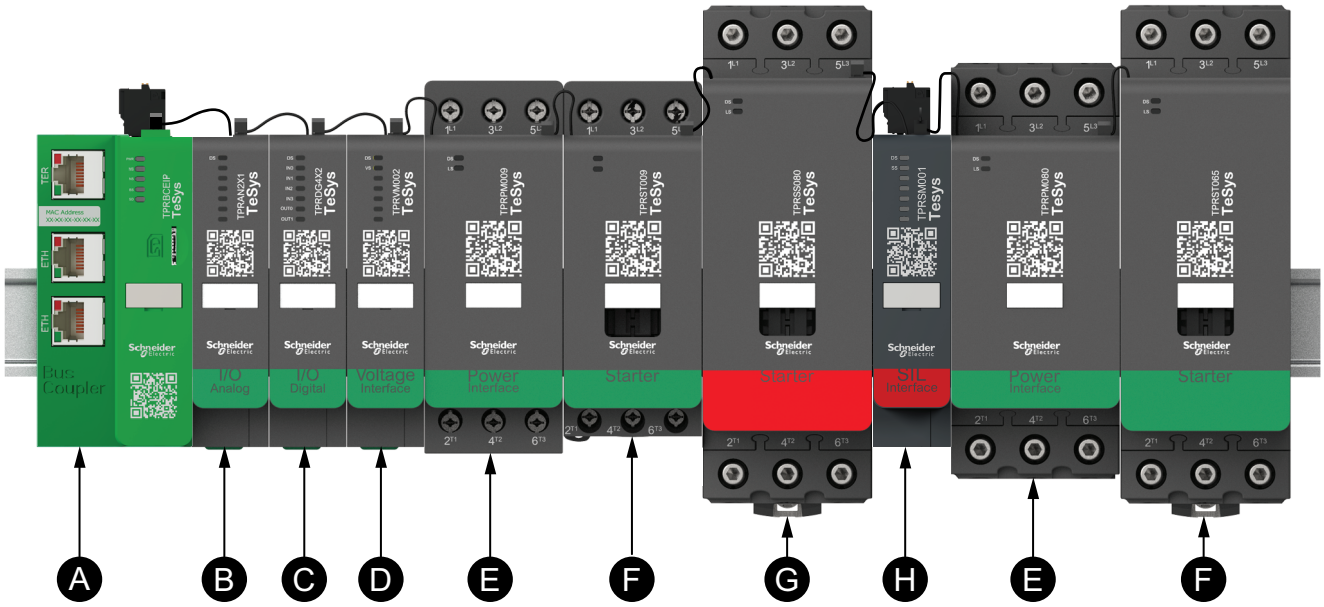

A	Bus Coupler	E	Power Interface Module
B	Analog I/O Module	F	Standard Starter
C	Digital I/O Module	G	SIL Starter
D	Voltage Interface Module	H	SIL Interface Module

Industrial Communication Protocols

TeSys island supports the EtherNet/IP, Modbus TCP, PROFINET, and PROFIBUS-DP industrial communication protocols.

TeSys island Specifications

Technical Specifications

TeSys island Specifications

Width	up to 112.5 cm (3.83 ft)
Modules	up to 20 modules, excluding the bus coupler and the voltage interface modules
PROFIBUS fieldbus only: Cyclic data size limit	Maximum size of 240 bytes possible
Control power consumption per system	3 A or 72 W maximum
Maximum load current per starter	80 A, 37 kW (50 hp), maximum
Internal data refresh time	10 ms
Mounting	Metallic DIN rail, horizontal or vertical

Operating Conditions

TeSys island is designed to durably sustain the following conditions. Other conditions may apply to specific modules as described in their data sheet document, available on www.se.com/tesys-island.

- 40 °C (104 °F) ambient temperature
- 400 or 480 V motor
- 50% humidity
- 80% load
- Horizontal mounting orientation
- All inputs activated
- All outputs activated
- 24 hours/day, 365 days/year run time

Derating Guidelines

TeSys island standard starters, SIL(2) starters, and power interface modules are designed for operation **without derating** under the following conditions:

- Horizontal mounting position
- Ambient temperature up to 50 °C (122 °F)

For vertical mounting or ambient temperatures above 50 °C (122 °F), apply the derating values in the following table to the load rating requirements. If both derating conditions apply, then you must apply both derating factors. Derating is calculated by the digital tools.

Derating Guidelines for Mounting Position and Ambient Operating Temperature

Derating Condition	Derating Factor
Mounting position	20% derating required in the vertical mounting position
Ambient operating temperature	2% derating per °C of temperature rise above 50 °C (122 °F), with a maximum of 60 °C (140 °F)

(2) Safety Integrity Level according to standard IEC 61508.

The derating conditions apply to all standard starters, SIL starters, and power interface modules. The derating conditions do not affect short-circuit protection devices.

Derating Examples

Example 1 – Derating Required

Load rating	8 A
Derating factor: Temperature inside the enclosure is 60 °C (140 °F)	1.20
Maximum load rating of starter TPRST009	9 A

8 A * 1.20 = 9.60 A

Since 9.60 A is greater than the maximum load rating of 9 A, derating is required. Upgrade from the TPRST009 reference number to the TPRST025 reference number with a maximum load rating of 25 A.

Example 2 – Derating Not Required

Load Rating	6 A
Derating Factor: Temperature inside the enclosure is 60 °C (140 °F) + Vertical Mounting	1.2 + (1.2 x 20%) = 1.44
Maximum Load Rating of TPRST009	9 A

6 A * 1.44 = 8.64 A

Since 8.64 A is less than the maximum load rating of 9 A, derating is not required. The TPRST009 reference number is appropriate.

Electromagnetic Interference

The protection and energy monitoring features of TeSys island module are based on current sensors. To reduce the risk of electromagnetic interference between two adjacent devices, we recommend that you implement one of the following installation rules if the ratio between the FLA settings of two adjacent devices is >100:1.

- Option 1: Using the engineering tool, reorganize the order of the avatars on the TeSys island so there are no adjacent devices with FLA ratios >100:1
- Option 2: Leave a spacing of 30 mm (1.18 in.) between the two adjacent devices.

The figure below illustrates Option 2.

Avoiding Electromagnetic Interference: Option 2

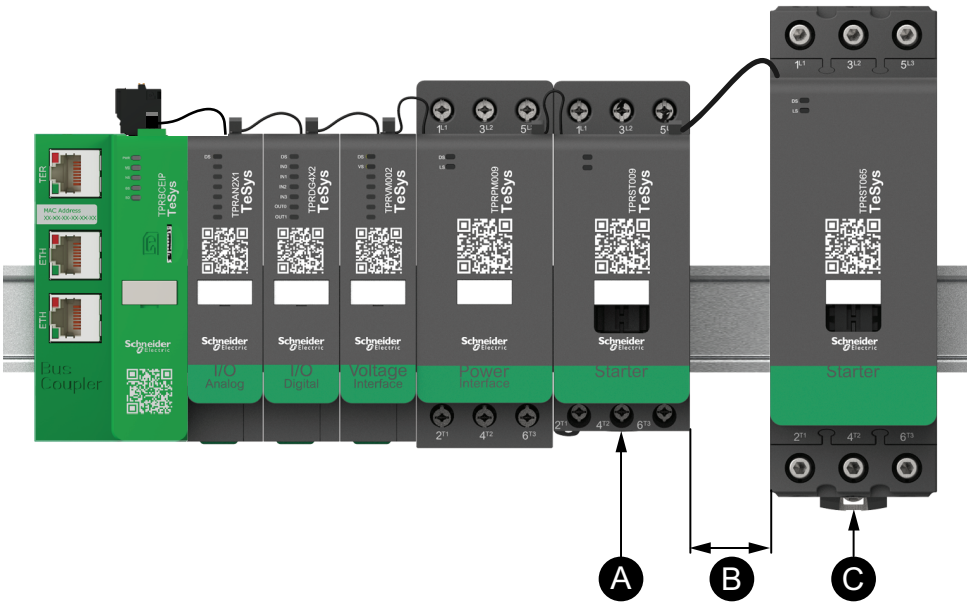

Legend

A	A TeSys island module with an FLA setting of 0.6 A
B	The recommended 30 mm (1.18 in.) spacing between the two adjacent devices with an FLA ratio >100:1
C	An adjacent TeSys island module with an FLA of 65 A (>0.6 A ×100)

Additionally:

1. Maintain a minimum distance of 30 cm (11.8 in.) between the TeSys island and sources of extremely high 50 or 60 Hz magnetic fields, such as three-phase bus systems.
2. TeSys island modules have integrated electrostatic discharge (ESD) protection. Discharge potential body charge to the equipment ground before handling or installing a module to reduce the risk of ESD damage.
3. Keep mobile communication devices at least 20 cm (7.87 in.) away from the TeSys island to reduce the likelihood of interference with the TeSys island.
4. Integrating radio communication devices in the same panel or in a near-by panel requires specific precautions related to transmit power and antenna location. Contact a Schneider Electric representative for more information.
5. TeSys island is a Class A device designed for use in environment A (according to *FCC Rules & Regulations*, Title 47, Part 15, Subpart B). Using TeSys island in environment B may cause radio interference necessitating additional mitigation methods.
6. For additional information on EMC installation practices, refer to Schneider Electric's *Electrical Installation Guide*, EIGED306001, or contact a Schneider Electric representative.

Heat Dissipation

To allow adequate heat dissipation, always leave a spacing of 10 cm (3.94 in.) between the short-circuit protection devices and the TeSys island starters.

Additional installation recommendations pertain under the following conditions:

- Three or more starters are mounted on the TeSys island side-by-side.
- The starters have ratings (Ie) greater than or equal to 25 A.
- The starters are used with a motor having a nominal current In > 85% x Ie.

Under these conditions, we recommend that you implement one of the following installation rules:

- Option 1: Using the engineering tool, reorganize the avatars on the TeSys island to avoid these conditions.
- Option 2: Use 50 cm (1.64 ft) cables to wire the short-circuit protection devices with the affected middle starters. In a group of three starters, which all meet the conditions itemized above, the extra length is only recommended for the starter in the middle. In a group of four starters, the extra length is only recommended for the two starters in the middle.

Durability Curves

For utilisation category AC-3

Selection according to required electrical durability, in category AC-3 (Ue ≤ 440 V)

- Control of three-phase asynchronous squirrel-cage motors with breaking while running.
- The current broken (Ic) in category AC-3 is equal to the rated operational current (Ie) of the motor.

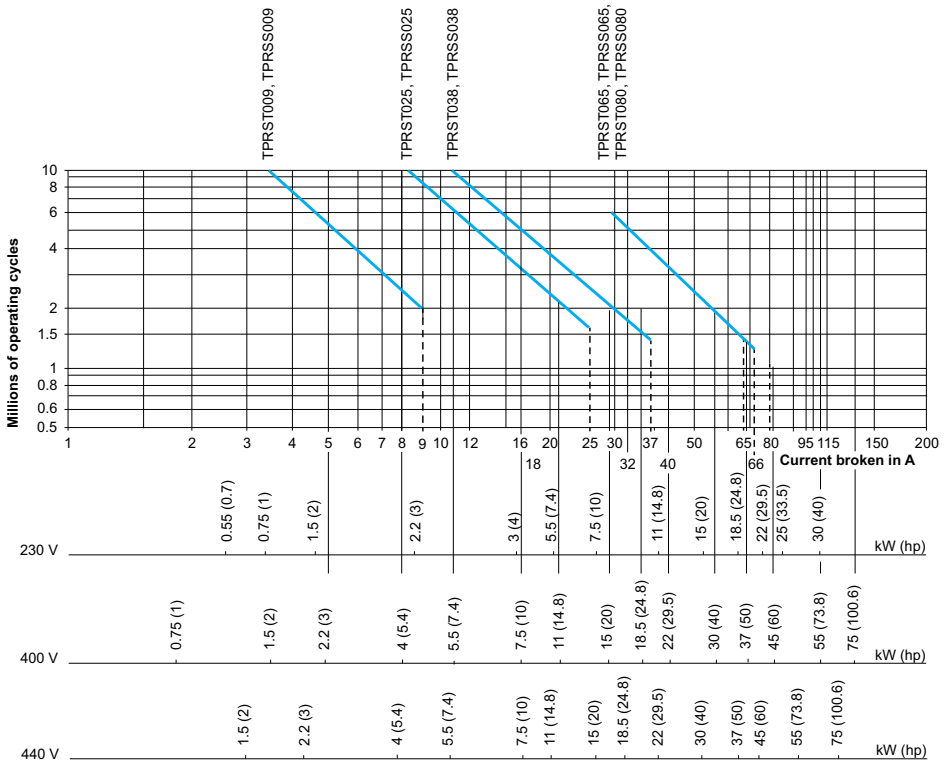

Operational power in kW (hp)—50 Hz.

Example:

- Asynchronous motor with
  - P = 5.5 kW (7.4 hp) − Ue = 400 V − Ie = 11 A − Ic = Ie = 11 A, or
  - P = 5.5 kW (7.4 hp) − Ue = 415 V − Ie = 11 A − Ic = Ie = 11 A
- 5 million operating cycles required.
- The above selection curves show the starter rating needed: TPRS•025.

Selection according to required electrical durability, in category AC-3 (Ue = 660/690 V)

- Control of three-phase asynchronous squirrel-cage motors with breaking while running.
- The current broken (Ic) in category AC-3 is equal to the rated operational current (Ie) of the motor.

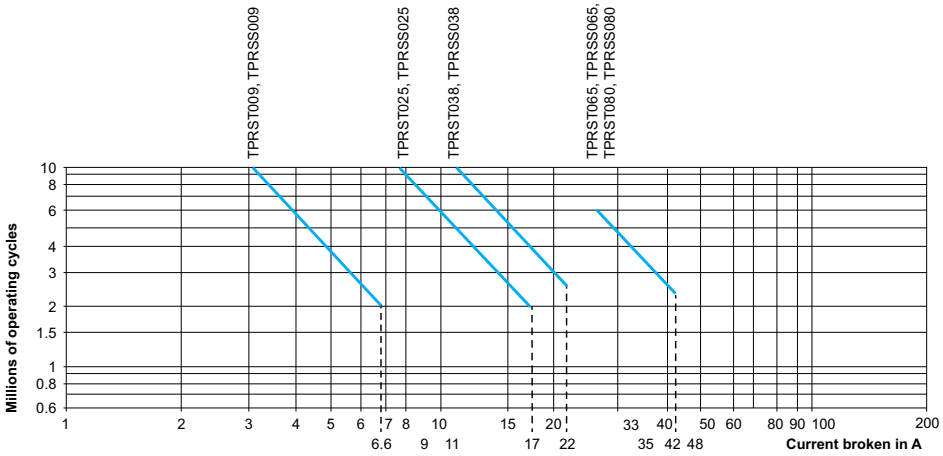

For utilisation category AC-1

Selection according to required electrical durability, in category AC-1 (Ue ≤ 690 V)

- Control of resistive circuits (cos ϕ ≥0.95).
- The current broken (Ic) in category AC-1 is equal to the current (Ie) normally drawn by the load.

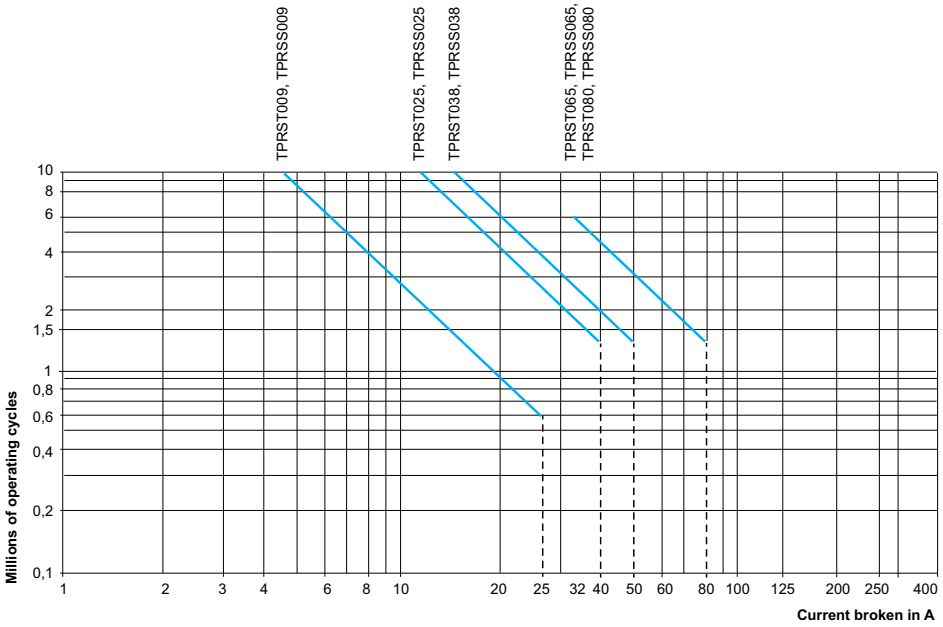

Example:

- Ue = 220 V − Ie = 50 A − θ ≤ 40 °C − Ic= Ie = 50 A
- 2 million operating cycles required
- The above selection curves show the starter rating needed: TPRS•065 or TPRS•080.

For utilisation categories AC-2 or AC-4

Selection according to required electrical durability, in categories AC-2 or AC-4 (Ue ≤ 440 V)

- Control of 3-phase asynchronous squirrel cage motors (AC-4) or slip ring motors (AC-2) with breaking while the motor is stalled.
- The current broken (Ic) in AC-2 is equal to 2.5 × Ie.
- The current broken (Ic) in AC-4 is equal to 6 × Ie (Ie = rated operational current of the motor).

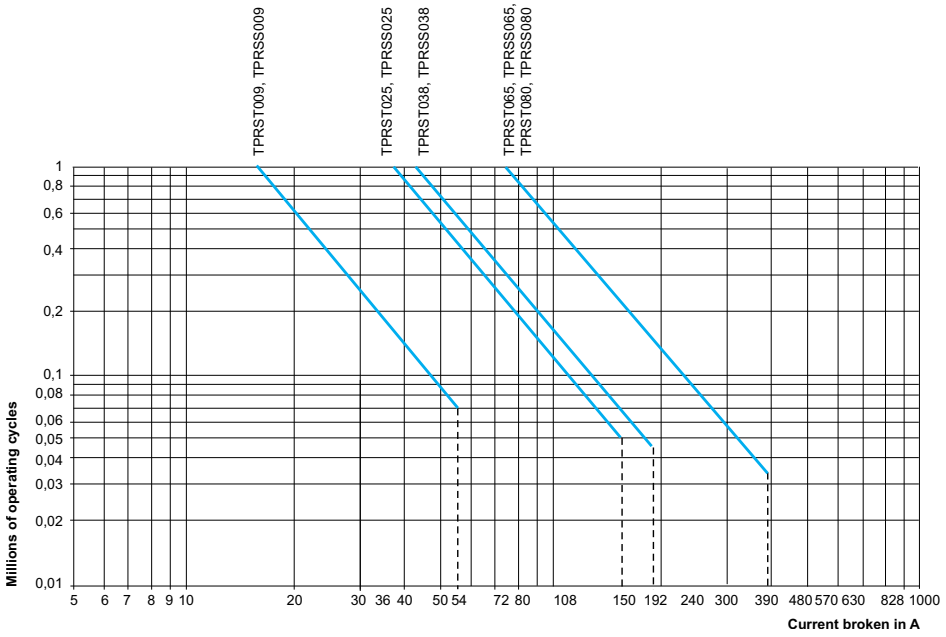

Example:

- asynchronous motor with
  - P = 5.5 kW (7.4 hp) − Ue = 400 V − Ie = 11 A. Ic = 6 ×Ie = 66 A, or
  - P = 5.5 kW (7.4 hp) − Ue = 415 V − Ie = 11 A. Ic = 6 ×Ie = 66 A
- 200,000 operating cycles required
- The above selection curves show the starter rating needed: TPRS•025

Selection according to required electrical durability, use in category AC-4 (440 V < Ue ≤ 690 V)

- Control of 3-phase asynchronous squirrel cage motors with breaking while the motor is stalled.
- The current broken (Ic) in AC-2 is equal to 2.5 × Ie.
- The current broken (Ic) in AC-4 is equal to 6 × Ie (Ie = rated operational current of the motor).

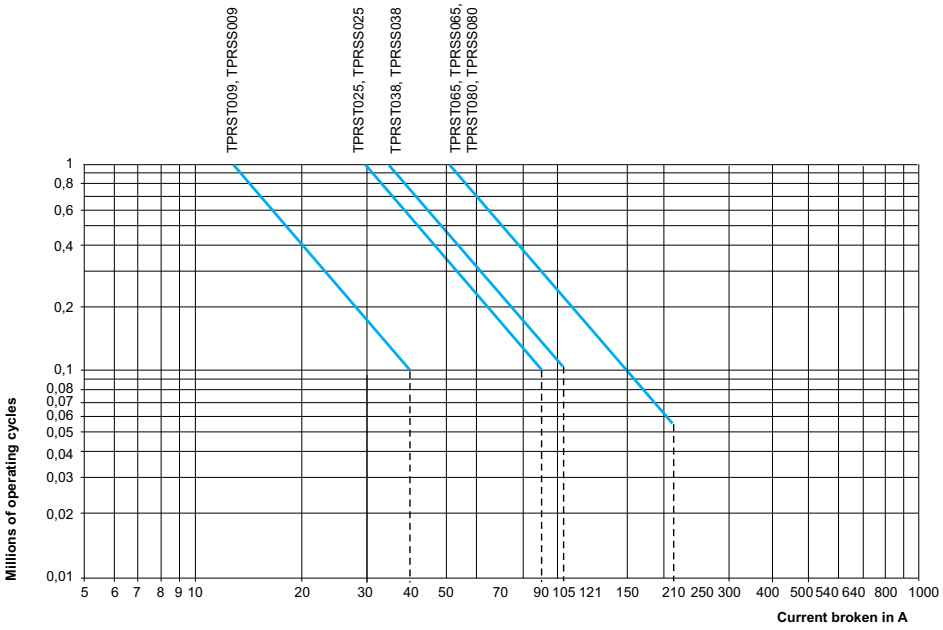

Hardware Description

What's in This Chapter

Bus Coupler....26
Power Devices....28
SIL Interface Module....32
I/O Modules....34
Voltage Interface Module....37

Bus Coupler

A single bus coupler is always present in the TeSys island as the fieldbus communication interface, and to control all other modules of the TeSys island. The bus coupler reference number is selected based on the required fieldbus protocol shown in the following table:

Bus Couplers

Fieldbus Protocol	Reference
EtherNet/IP	TPRBCEIP
Modbus TCP	TPRBCEIP
PROFINET	TPRBCPFN
PROFIBUS-DP	TPRBCPFB

The following are the main functions of the bus coupler:

- Communicating with the PLC
- Managing the TeSys avatars and their associated modules
- Collecting operational status and diagnostic data from the TeSys island modules
- Communicating with configuration, operation and maintenance digital tools
- Supplying the modules with control power

The bus coupler is connected:

- Upstream to the fieldbus
- Downstream to the TeSys island modules with the daisy-chain flat cable
- Upstream to the control power supply
- Optionally, upstream through its service port, to a software tool (EcoStruxure™ Machine Expert programming tool or SoMove™ software)

The bus coupler service port and dual port Ethernet switch on the TPRBCEIP and TPRBCPFN are located on the same network. On the TPRBCPFN bus coupler, the service port is for temporary use during commissioning and troubleshooting only.

The bus coupler is equipped with a micro SD card slot, to allow upload and backup functions on a micro SD card.

For the position of the bus coupler on the TeSys island, refer to TeSys™ island Overview, page 17.

Bus Coupler Features – TPRBCEIP

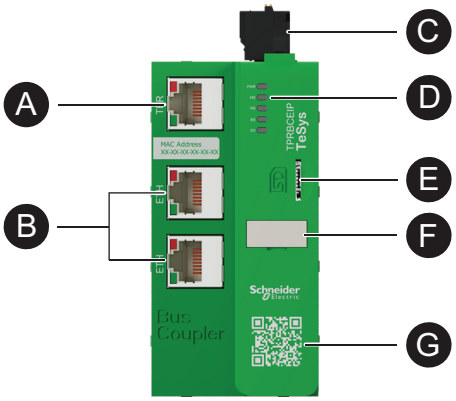

A	Terminal or Service port: 1 x RJ45	E	Slot for micro SD card
B	Dual port Ethernet switch: 2 x RJ45	F	Name tag
C	24 Vdc control power supply connector with spring terminals	G	QR code
D	LED status indicators		

Bus Coupler Features – TPRBCPFN

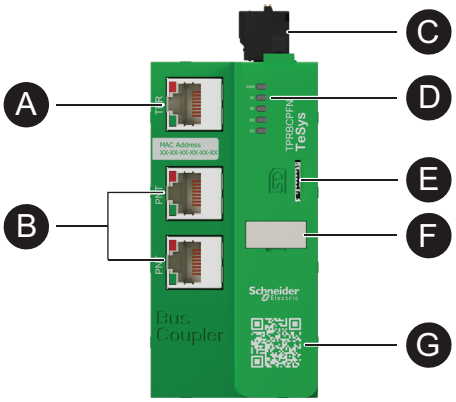

A	Terminal or Service port: 1 x RJ45	E	Slot for micro SD card
B	Dual port Ethernet switch: 2 x RJ45	F	Name tag
C	24 Vdc control power supply connector with spring terminals	G	QR code
D	LED status indicators		

Bus Coupler Features – TPRBCPFB

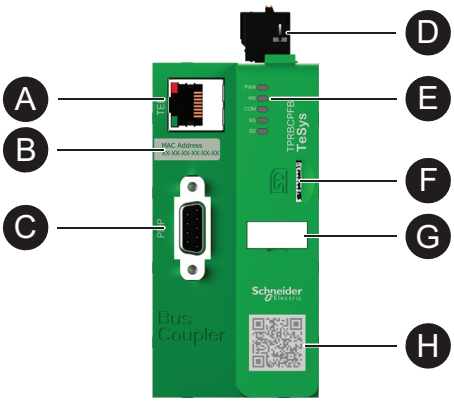

A	Terminal or Service port: 1 x RJ45	E	LED status indicators
B	MAC Address	F	Slot for micro SD card
C	PROFIBUS-DP fieldbus port	G	Name tag
D	24 Vdc control power supply connector with spring terminals	H	QR code

Power Devices

TeSys island offers two types of power devices:

- Standard and SIL(3) starters that include a contactor and provide the following functionality as part of a TeSys avatar:
  - Load control management
  - Electrical protection functions
  - Digital asset management
- Power interface modules that monitor current but do not provide load control. Load control must be provided by a downstream external power device like a solid-state relay or a soft starter.

Avatars that include power devices can provide load level energy monitoring when a voltage interface module (VIM) is installed in the TeSys island.

SIL starters in combination with a SIL interface module (SIM) can achieve certified Stop Category 0 and Stop Category 1 functions. (4)

Power Interface Module

Power interface modules (PIMs) provide the following:

- Electrical and thermal protection functions
- Digital asset management

TeSys avatars that include power devices can provide full-load energy monitoring when a voltage interface module is installed on the TeSys island.

(3) Safety Integrity Level according to standard IEC 61508.
(4) Stop categories according to EN/IEC 60204-1.

A PIM can be associated with an analog I/O module to measure temperature through an external sensor. A PIM can also control and monitor the current supplied to an external device.

The main functions of the PIMs are as follows:

- Measure electrical downstream data related to the load
- Provide energy monitoring data when a voltage interface module is installed on the TeSys island

The PIMs are connected:

- Upstream to a circuit breaker
- Downstream to an external power device like a contactor, soft starter, or variable speed drive

The PIMs communicate with the bus coupler, sending operational data and receiving commands.

Power Interface Module Ratings

Power Ratings		Amperage	Reference
kW	hp		
4	5	0.18–9	TPRPM009
18.5	20	0.76–38	TPRPM038
37	40	4–80	TPRPM080

Power Interface Module Features

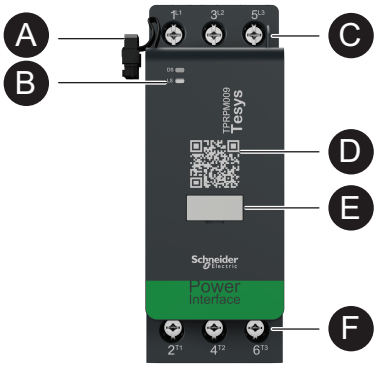

A	Flat cable (for connection with the module to the left)	D	QR code
B	LED status indicators	E	Name tag
C	Upstream power connections	F	Downstream power connections

Standard Starters

Standard starters provide load control, electrical and thermal protection functions, and digital asset management.

Starters provide the following main functions:

- On/Off power control for loads (three phase or single phase)
- Electrical data measurement related to the load
- Energy monitoring when a voltage interface module is installed on the TeSys island
- Functional testing and simulation
- Event logging and counters

Multiple starters might be needed for a single TeSys avatar function. For example, a motor two-direction avatar includes two standard starters.

The standard starters are connected:

- Upstream to a circuit breaker
- Downstream to the load (three phase or single phase)

The starters communicate with the bus coupler, sending operational data and receiving commands.

Standard Starter Ratings

Power Ratings		Amperage	Reference
kW	hp		
4	5	0.18–9	TPRST009
11	15	0.5–25	TPRST025
18.5	20	0.76–38	TPRST038
30	40	3.25–65	TPRST065
37	40	4–80	TPRST080

Standard Starter Features

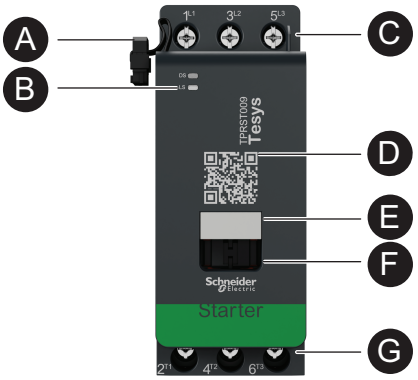

A	Flat cable (for connection with the module to the left)	E	Name tag
B	LED status indicators	F	Mobile bridge
C	Upstream power connections	G	Downstream power connections
D	QR code		

SIL Starters

⚠WARNING

UNINTENDED EQUIPMENT OPERATION

For complete instructions about functional safety, refer to the TeSys island Functional Safety Guide, 8536IB1904.

Failure to follow these instructions can result in death, serious injury, or equipment damage.

SIL(5) starters provide similar functions to standard starters but are associated with a SIL interface module.

The main functions of the SIL starters are as follows:

- Provide Stop Category 0 and Stop Category 1(6) functionality
- Provide operational control for loads
- Measure electrical data related to the load
- Provide energy monitoring data when a voltage interface module is installed in the TeSys island

Multiple SIL starters might be needed for a single TeSys avatar function. For example, the avatar Motor Two Directions - SIL Stop, W. Cat 1/2(7) includes two SIL starters. In addition, avatars using SIL starters always include a SIL interface module.

The SIL starters are connected:

- Upstream to a circuit breaker
- Downstream to the load

The SIL starters communicate with the bus coupler, sending operational data and receiving commands.

SIL Starter Ratings

Power Ratings		Amperage	Reference
kW	hp		
4	5	0.18–9	TPRSS009
11	15	0.5–25	TPRSS025
18.5	20	0.76–38	TPRSS038
30	40	3.25–65	TPRSS065
37	40	4–80	TPRSS080

(5) Safety Integrity Level according to standard IEC 61508.
(6) Stop Category 0 and Stop Category 1 according to EN/IEC 60204-1.
(7) Wiring Category 1 and Category 2 according to ISO 13849.

SIL Starter Features

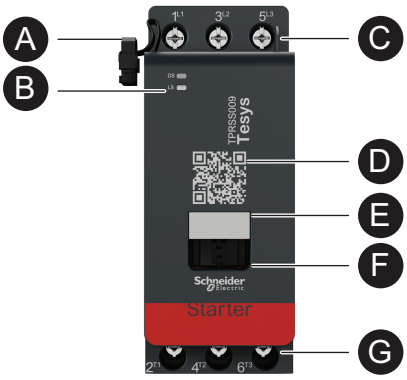

A	Flat cable (for connection with the module to the left)	E	Name tag
B	LED status indicators	F	Mobile bridge
C	Upstream power connections	G	Downstream power connections
D	QR code		

SIL Interface Module

⚠WARNING

UNINTENDED EQUIPMENT OPERATION

For complete instructions about functional safety, refer to the TeSys™ island Functional Safety Guide, 8536IB1904.

Failure to follow these instructions can result in death, serious injury, or equipment damage.

A SIL(8) interface module (SIM), associated with one or several SIL starters, allows the design of Stop functions according to EN/IEC 60204-1:

- Stop Category 0: immediate machine power disconnection
- Stop Category 1: electrical power is maintained on the machine actuators until the stop process fully ends (absence of motion)

The reference number is TPRSM001.

The following are the main functions of the SIM:

- Interface with an external interlocking device
- Command the stop function of its SIL group of SIL starters

Several SIL groups of SIL starters can be set up on the TeSys island. Each SIL group is delimited by a SIM on the right side (or the top side if vertically mounted).

The SIM is connected upstream:

- To the 24 Vdc source
- To an interlock (for example, a Preventa™ XPS-AC module)

The SIM communicates with the bus coupler, sending operational data.

(8) Safety Integrity Level according to standard IEC 61508

The Stop function is achieved by electromechanical means without any digital communication or bus coupler involvement.

SIL Interface Module Features

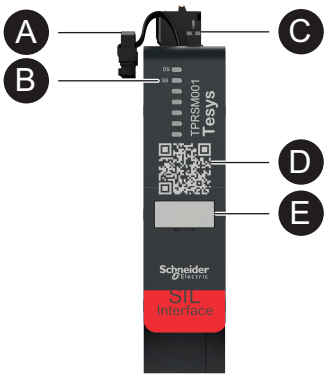

A	Flat cable (for connection with the module to the left)	D	QR code
B	LED status indicators	E	Name tag
C	Connector with spring terminals		

I/O Modules

Digital and analog I/O modules are typically used to get data from sensors and control actuators.

Digital I/O Module

The main functions of the digital I/O module are as follows:

- To monitor binary sensors and switches via four 24 Vdc sink/source inputs
- To control devices like relays, signaling lights, or controller binary inputs via two 0.5 A, 24 Vdc transistor-type outputs
- To capture statistical operational data of the I/O module:
  - Number of power cycles
  - Number of detected events
  - Time the module is on
- To perform I/O Channel testing and simulation

The reference number is TPRDG4X2.

The digital I/O module is connected:

- Upstream to the 24 Vdc source needed to power the downstream actuators
- Input channel: downstream to a binary sensor or switch
- Output channel: downstream to the 24 Vdc input of the actuator

Refer to Avatar Wiring Schematics, page 224 for module wiring.

Devices connected to the digital I/O module must be protected against short-circuits by external means like fuses. Use one 0.5 A Type T fuse per output. Recommended are Littlefuse 215, 218, FLQ, or FLSR series or equivalent.

The digital I/O module communicates with the bus coupler, sending operational data and receiving commands.

Input Specifications

Channel	Inputs
Rated power supply	24 Vdc
Input type	Type 1 (IEC/EN 61131-2)
Number of discrete inputs	4 isolated with common point
Discrete input current	7 mA at 24 V
Discrete input voltage	24 Vdc (voltage limits: 19.2–28.8 V)
Cable type	Refer to the instruction sheet MFR44099, *Analog I/O and Digital I/O Modules*, and the section I/O Module Wiring, page 123.
Cable length, maximum	30 m (98 ft)

Output Specifications

Channel	Inputs
Number of discrete outputs	2 isolated with common point
Discrete output voltage	24 Vdc (voltage limits: 19.2–28.8 V)
Rated output current	0.5 A, resistive
Cable type	Refer to the instruction sheet MFR44099, *Analog I/O and Digital I/O Modules*, and the section I/O Module Wiring, page 123.
Cable length, maximum	30 m (98 ft)

Digital I/O Module Features

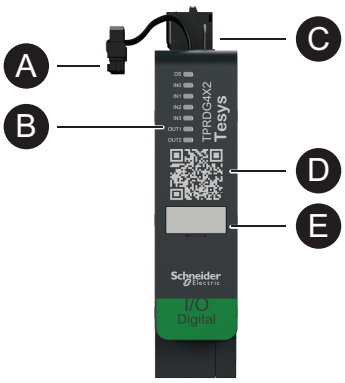

A	Flat cable (for connection with the module to the left)	D	QR code
B	LED status indicators	E	Name tag
C	Connector with spring terminals		

Analog I/O Module

The main functions of the analog I/O module are as follows:

- Monitor voltage or current from analog sensors (such as thermocouple, PT100, PT1000, NI100, NI1000, PTC Binary) via two −10 to +10 V / 0 to 20 mA capable inputs
- Control voltage-driven actuators (such as variable speed drives or a current loop to the controller's analog input) via one −10 to +10 V / 0 to 20 mA capable output
- Capture statistical operational data:
  - Number of power cycles
  - Number of device events
  - Time the module is on

The reference number is TPRAN2X1.

The analog I/O module is connected:

- Upstream to the 24 Vdc source needed to power the downstream actuators
- Input channel: downstream to an analog sensor or sensor transmitter
- Output channel: downstream to the control input of a voltage-driven actuator, such as a variable speed drive

Refer to Avatar Wiring Schematics, page 224 for module wiring.

Devices connected to the analog I/O module must be protected against short circuits by external means like fuses.

The analog I/O module communicates with the bus coupler, sending operational data and receiving commands.

NOTE: No per-channel LEDs are provided.

Input/Output Specifications

Channel	Inputs	Output
Number of analog inputs and outputs	2 isolated with common point	1 isolated
Rated power supply	24 Vdc	
Resolution, maximum	16 bits, or 15 bits + sign	12 bits (4096 points)
Cable type	Twisted pair shielded	
Cable length, maximum	30 m (98 ft)	

Signal Type: Inputs

Channel	Inputs			
Signal type	**Voltage (Vdc)**	**Current (mA)**	**Thermocouple**	**3–wire RTD (Resistance Temperature Detector)**
Range	• 0 to 10 • −10 to +10	• 0–20 • 4–20	• Type K, J, R, S, B, E, T, N, C • PTC Binary	PT100, PT1000, NI100, NI1000

Signal Type: Outputs

Channel	Output	
Signal type	**Voltage**	**Current**
Range	• 0 to 10 Vdc • −10 to +10 Vdc	• 0–20 mA • 4–20 mA

Analog I/O Module Features

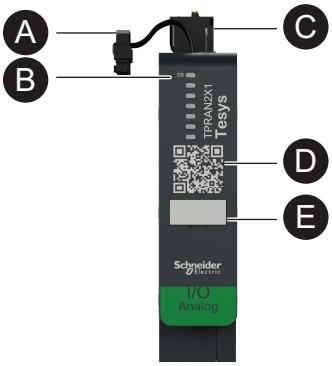

A	Flat cable (for connection with the module to the left)	D	QR code
B	LED status indicators	E	Name tag
C	Connector with spring terminals		

Voltage Interface Module

The voltage interface module (VIM) enables voltage, power, and energy monitoring for the TeSys island.

The reference number is TPRVM001.

The main functions of the VIM are as follows:

- Measure single-phase and three-phase line voltages (47–63 Hz) at one connection point of the TeSys island
- Monitor the energy-related data at the island level
- Monitor the voltages in single-phase systems L-N or L-L
- Monitor the voltages in three-phase systems without neutral N connection
- Calculate the RMS phase voltages and the voltage phase sequence
- Monitor for fundamental frequency
- Identify the level and duration of dip and swell events

Refer to Avatar Wiring Schematics, page 224 for module wiring.

The VIM is connected upstream to the TeSys island common power supply.

The VIM communicates with the bus coupler, sending operational data.

The connection specifications for measuring input are as follows: removable spring terminal block with three rigid cables sized 0.2–2.5 mm² (AWG 24–14).

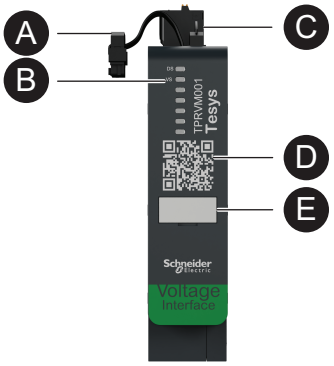

A	Flat cable (for connection with the module to the left)	D	QR code
B	LED status indicators	E	Name tag
C	Connector with spring terminals		

Digital Tools

What's in This Chapter

TeSys island Configurator....38
Engineering Tools....38
Operation and Maintenance Tool....39

TeSys island Configurator

The TeSys island Configurator is an online tool accessible from the Schneider Electric website. The configurator is an intelligent catalog, computing and providing the island's configuration based on the requirements entered for the specific application.

The TeSys island Configurator's main purpose is as follows:

- Capture the functional requirements of the application, and the electrical characteristics of the island
- Compute the list of required TeSys island devices automatically
- Generate the physical topology of the island
- Generate the associated bill of materials
- Generate the configuration files, which can be downloaded for re-use by EcoStruxure Machine Expert and SoMove software.
- Provide access to technical documentation related to electrical panel engineering and automation control programming

The TeSys island Configurator can be found at www.se.com/en/work/products/industrial-automation-control/tools/motor-control-configurator.jsp.

Engineering Tools

The engineering tools include EcoStruxure Machine Expert, EcoStruxure Control Expert, SoMove software, and the TeSys island DTM.

These tools allow you to configure, monitor, control, and customize TeSys island. The engineering tools assist with the design, engineering, and commissioning phases of the island, as well as with PLC programming. The TeSys island engineering tools are built using open FDT or DTM technology.

Design Functions

- Design the TeSys island topology.
- Generate a bill of material.

Engineering Functions

- Adjust the settings of TeSys avatars to customize the electrical and load protection parameters.
- Communicate with the PLC (Machine Expert and SoMove software).

Commissioning Functions

- Check the electrical wiring and test the electrical lines in Test mode without loading a configuration.
- Simulate commands from the PLC and set the status of the avatars in Force mode.
- Check the island's status and monitor the avatars with diagnostic features.
- Compare the loaded configuration and topology against the project file.
- Operate the island directly from a control panel.

Programming Functions

- Generate exchange files for third-party PLC programming environments (SoMove software).
- Access a library of function blocks (Machine Expert) for control, diagnostics, energy monitoring, and asset management.

The engineering tool can be downloaded from www.se.com by entering *TeSys island DTM* in the Search field. SoMove software can also be downloaded directly from the Schneider Electric website.

Full Integration into SoMove Software

Aided design to determine

- The bill of materials of the TeSys island
- The topology of the TeSys island

Aided engineering

- Generation of exchange files with a third party programming environment (EDS files, AML files)
- Fast programming using function blocks
- Customized functions for Electrical protections, Motor protections, and Energy monitoring
- Contextual setting of parameters for communication with the controller and avatars

Aided commissioning

- Test mode: Check the electrical wiring and test the electrical lines without loading a configuration.
- Force mode: Force the commands and avatar status to ease commissioning.
- Diagnostic tab: Check the status, monitor the avatars and their associated modules, and compare the loaded configuration and topology with the project file.
- Control panel: Operate the TeSys island directly.

Operation and Maintenance Tool

The Operation and Maintenance tool (OMT) is web-based and optimized for use with a tablet so a technician can troubleshoot and diagnose the island without opening the electrical panel. The operation and maintenance tool offers the following features to aid in operation, maintenance, and troubleshooting:

- Customizable user interface
- User access and rights management for secure login
- Monitoring of device behavior, load behavior, and energy consumption
- Test mode and Force mode available for ease of maintenance
- Diagnostics to check the island’s status and monitor the TeSys avatars
- Control panel to operate the island directly
- Maintenance alarms to help avoid machine down time
- Access to product data for asset management
- Accessibility from the engineering tools with a QR scan

Fieldbus Communication

What's in This Chapter

Industrial Communication Protocols.....40
Degraded Mode.....40

Industrial Communication Protocols

TeSys island supports the EtherNet/IP, Modbus TCP, PROFINET, and PROFIBUS-DP industrial communication protocols.

Degraded Mode

When fieldbus communication with the controller is lost, TeSys island remains in the operational state however, enters Degraded mode. Communication loss is defined by:

- **EtherNet/IP fieldbus:** Communication loss is detected when an established exclusive owner connection times out for the duration specified by the communication loss timeout setting in DTM.
- **Modbus/TCP fieldbus:** Communication loss is detected after receiving no write requests to the cyclic I/O scanning data for the duration specified by the Communication Loss Timeout setting in the DTM.
- **PROFINET fieldbus:** Communication loss is detected when an established application relation (AR) with an I/O controller is closed or disconnected on either end of the AR for the duration specified by the communication loss timeout setting in DTM. TeSys island supports one AR per I/O controller.
- **PROFIBUS-DP fieldbus:** Communication loss is detected when the duration specified by the communication loss timeout setting in DTM for the connection expires.

NOTE: Loss of communication with the DTM or OMT does not trigger the transition to Degraded mode.

During Degraded mode:

- The Fieldbus ports remains active.
- The Service port remains active.
- The TeSys avatars enter Degraded mode. During Degraded mode, avatars with local control are driven by local inputs. All other avatars enter Fallback configured. For the definition of Fallback Mode, refer section System States, page 144.

Recovering from Degraded Mode

You can enable the Degraded mode auto-reset option in the TeSys island DTM Library. If **Enable Degraded Mode Auto-Reset** is set to **Yes**, then TeSys island exits Degraded mode when communication is restored.

If the option **Enable Degraded Mode Auto-Reset** is set to **No**, then a system restart command or power cycle is required to exit Degraded mode.

Enabling Degraded Mode Auto-Reset

NOTE: The Auto-Reset function may lead to immediate energizing of the load, with an active command from the PLC or the Force mode function.

⚠WARNING

UNINTENDED EQUIPMENT OPERATION

Configure the Degraded Mode Auto-Reset in such a way that it does not result in hazardous conditions.

Failure to follow these instructions can result in death, serious injury, or equipment damage.

1. Under Fieldbus, select **Logic Controller**.
2. Set **Enable Degraded Mode Auto-Reset** to **Yes**.

Enabling Degraded Mode Auto-Reset

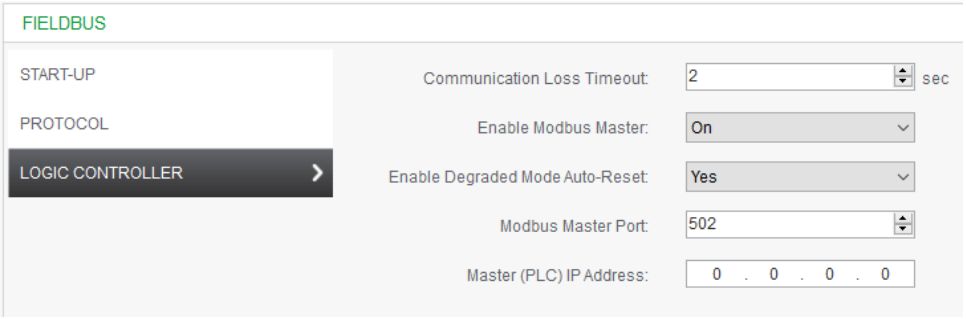

Ethernet Network Topologies

TeSys island can be used in a star or ring topology. TeSys island supports Rapid Spanning Tree Protocol (RSTP), a network protocol that builds a loop-free logical topology for Ethernet networks. RSTP is enabled by default in the system avatar.

NOTE: External managed switches need to be connected.

TeSys Avatar Functions

What’s in This Part

TeSys Avatar Introduction.....43
Avatar Logic and Functionality 48
Avatar Functional Description 58
Monitoring Data 81

TeSys Avatar Introduction

What's in This Chapter

Avatar Definition 43
List of TeSys Avatars.....44

Avatar Definition

TeSys avatars bring ready-to-use functions through their predefined logic and associated physical devices. The avatar logic is executed in the bus coupler. The bus coupler manages data exchanges internally within the TeSys island, and also externally with the PLC.

There are four types of TeSys avatars:

System avatar

Represents the whole island as a system. The System avatar allows setting the network configuration and computes TeSys island level data.

Device avatars

Represent functions performed by switches and I/O modules.

Load avatars

Represent functions related to specific loads, such as a forward-reverse motor. Load avatars include the appropriate modules and operating characteristics to serve the load type. For example, a Motor Two Directions avatar includes two starter modules, accessories, pre-programmed control logic, and a pre-configuration of the available protection functions.

Standard (non-SIL(9)) Load avatars provide the following:

- Local control

  NOTE: Local control is applicable for all Load avatars (except PIM avatar).
- Local trip reset (to allow an operator to use a local input to trigger the local trip reset on rising edge of the input. When the input changes from 0 to 1, then the trip reset of avatar is executed)

  NOTE: Local trip reset is applicable for all Load avatars (except PIM avatar).
- Bypass (to allow an operator to use a local command to temporarily bypass a trip condition and continue the operation of the avatar)
- Process variable monitoring

Application avatars

Represent functions related to specific user applications, such as a **Pump & Ventilator** or conveyor. Application avatars provide the following:

- Local control
- Local trip reset (to allow an operator to use a local input to trigger the local trip reset on rising edge of the input. When the input changes from 0 to 1, then the trip reset of avatar is executed)
- Bypass (to allow an operator to use a local command to temporarily bypass a trip condition and continue the operation of the avatar)
- Manual mode override (to allow an operator to use a local input to override the configured control mode and control the avatar from a local command source)
- Process variable monitoring

(9) Safety Integrity Level according to standard IEC 61508.

For example, a **Pump & Ventilator** avatar includes the following:

- One starter module
- One or more digital I/O modules for local control, local trip, and process variable (PV) switches
- Configurable control logic
- Pre-configuration of the load and electrical functions

Process variable inputs receive analog values from sensors such as a pressure meter, a flow meter, or a vibration meter. PV switches receive discrete signals from switches such as a flow switch or a pressure switch.

Operational control (Run and Stop command) of the avatar in autonomous mode is configurable for up to two PV inputs or PV switches. It includes settings for the threshold and hysteresis for analog inputs, and positive or negative logic for both analog and digital inputs for the **Pump & Ventilator** avatar.

The avatars installed on the TeSys island are controlled by the TeSys island bus coupler. Each avatar includes predefined logic for managing its physical modules, while also providing easy data exchange with PLCs through function blocks. Avatars include pre-configuration of the available protection functions.

Information accessible through the avatar includes the following:

- Control data
- Advanced diagnostics data
- Asset management data
- Energy data

List of TeSys Avatars

TeSys Avatars

Name	Icon	Description
System avatar		A required avatar that enables a single point of communication to the TeSys island.
Device		
Switch		To make or break a power line in an electrical circuit
Switch - SIL Stop, W. Cat 1/2(10)		To make or break a power line in an electrical circuit with Stop Category 0 or Stop Category 1(11) function compliance for Wiring Category 1 and Category 2.
Switch - SIL Stop, W. Cat 3/4(12)		To make or break a power line in an electrical circuit with Stop Category 0 or Stop Category 1 function compliance for Wiring Category 3 and Category 4.

(10) Safety Integrity Level according to standard IEC 61508. Wiring Category 1 and Category 2 according to ISO 13849.
(11) Stop category according to EN/IEC 60204-1.
(12) Safety Integrity Level according to standard IEC 61508. Wiring Category 3 and Category 4 according to ISO 13849.

TeSys Avatars (Continued)

Name	Icon	Description
Digital I/O		To provide control of 2 digital outputs and status of 4 digital inputs
Analog I/O		To provide control of 1 analog output and status of 2 analog inputs
Load		
Power Interface without I/O (measure)		To monitor current supplied to an external device, such as a solid-state relay, soft starter, or variable speed drive
Power Interface with I/O (control)		To monitor current supplied to and to control an external device, such as a solid-state relay, soft starter, or variable speed drive
Motor One Direction		To manage[13] a motor in one direction
Motor One Direction - SIL Stop, W. Cat 1/2		To manage a motor in one direction, with Stop Category 0 or Stop Category 1 function compliance for Wiring Category 1 and Category 2.
Motor One Direction - SIL Stop, W. Cat 3/4		To manage a motor in one direction, with Stop Category 0 or Stop Category 1 function compliance for Wiring Category 3 and Category 4.
Motor Two Directions		To manage a motor in two directions (forward and reverse)
Motor Two Directions - SIL Stop, W. Cat 1/2		To manage a motor in two directions (forward and reverse), with Stop Category 0 or Stop Category 1 function compliance for Wiring Category 1 and Category 2

(13) “Manage” in this context encompasses energizing, controlling, monitoring, diagnosing, and protecting the load.

TeSys Avatars (Continued)

Name	Icon	Description
Motor Two Directions - SIL Stop, W. Cat 3/4		To manage a motor in two directions (forward and reverse), with Stop Category 0 or Stop Category 1 function compliance for Wiring Category 3 and Category 4
Motor Y/D One Direction		To manage a wye-delta (star-delta) motor in one direction
Motor Y/D Two Directions		To manage a wye-delta (star-delta) motor in two directions (forward and reverse)
Motor Two Speeds		To manage a two-speed motor and two-speed motor with Dahlander option
Motor Two Speeds - SIL Stop, W. Cat 1/2		To manage a two-speed motor, with Stop Category 0 or Stop Category 1 function compliance for Wiring Category 1 and Category 2
Motor Two Speeds - SIL Stop, W. Cat 3/4		To manage a two-speed motor, with Stop Category 0 or Stop Category 1 function compliance for Wiring Category 3 and Category 4
Motor Two Speeds Two Directions		To manage a two-speed motor in two directions (forward and reverse)
Motor Two Speeds Two Directions - SIL Stop, W. Cat 1/2		To manage a two-speed motor in two directions (forward and reverse), with Stop Category 0 or Stop Category 1 function compliance for Wiring Category 1 and Category 2
Motor Two Speeds Two Directions - SIL Stop, W. Cat 3/4		To manage a two-speed motor in two directions (forward and reverse), with Stop Category 0 or Stop Category 1 function compliance for Wiring Category 3 and Category 4
Resistor		To manage a resistive load

TeSys Avatars (Continued)

Name	Icon	Description
Power Supply		To manage a power supply
Transformer		To manage a transformer
Application		
Pump & Ventilator		To manage a Pump and Ventilator
Conveyor One Direction		To manage a conveyor in one direction
Conveyor One Direction - SIL Stop, W. Cat 1/2		To manage a conveyor in one direction, with Stop Category 0 or Stop Category 1 function compliance for Wiring Category 1 and Category 2
Conveyor Two Directions	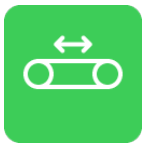	To manage a conveyor in two directions (forward and reverse)
Conveyor Two Directions - SIL Stop, W. Cat 1/2		To manage a conveyor in two directions (forward and reverse), with Stop Category 0 or Stop Category 1 function compliance for Wiring Category 1 and Category 2

NOTE:

- For Two Speed Two Direction avatar disable current phase reversal trip.
- For two-direction applications, the recommended switching time is 1 s between:
  - **ForwardCommand** OFF to **ReverseCommand** ON.
  - **ReverseCommand** OFF to **ForwardCommand** ON.
  - This switching time includes mechanical interlocks and controlling from PLC.

Avatar Logic and Functionality

What's in This Chapter

Process Variables 48
Bypass Functionality 48
Manual Mode Override 48
Pump & Ventilator Avatars 48
Conveyor Avatars 51
Load Avatars 52
Avatar Predictive Alarms 54

This section describes the avatar logic and functionality for the application and load avatars equipped with configurable control logic.

Process Variables

Application and load avatars introduce Process Variable (PV) inputs and switches:

- PV inputs receive analog values from sensors such as pressure meters, flow meters, or vibration meters. PV inputs connect to analog I/O modules (AIOMs) that are included as part of the avatar. The number of AIOMs required for the avatar is determined based on the number of configured PV inputs.
- PV switches receive discrete signals from switches such as float switches or proximity switches. PV switches connect to digital I/O modules (DIOMs) that are included as part of the avatar. The number of DIOMs required for the avatar is determined based on the number of configured PV switches.

Bypass Functionality

Bypass functionality is included with certain load and application avatars. This functionality allows the user to manually bypass detected avatar trips and continue operation. The Bypass switch is connected to a port on a digital I/O module that is included as part of the avatar. When the Bypass switch is set to the On position, the Bypass function bypasses any detected trips until the user returns the switch to the Off position.

Manual Mode Override

The operational control comes from a digital I/O module on the avatar that overrides the configuration selection of Remote Control mode or Autonomous Control mode. It enables the avatar to take operational control from the local command, as if it were configured for the Local Control mode. When Manual Mode Override is activated, the PV Control input conditions need to be satisfied.

Pump & Ventilator Avatars

The **Pump & Ventilator** avatars include one starter module, digital I/O module(s) for PV switches, analog I/O module(s) for PV inputs, configurable control logic, and optional or configurable motor temperature monitoring.

Pump & Ventilator Avatars Control Modes

The **Pump & Ventilator** avatar has three types of control modes, described below. The type of Control mode for the avatar can be selected during the configuration of the avatar.

- **Remote Control mode**: The operational control is managed by the PLC.
- **Autonomous Control mode** (available on **Pump & Ventilator** avatar only): The operational control of the avatar in autonomous mode comes from configurable PV Control inputs. PV Control inputs are one or two PV inputs or PV switches. They have the following settings:
  - Analog PV Control inputs: PV control level, PV control logic, and PV control hysteresis.
  - Digital PV Control inputs: PV control logic.

  Degraded mode does not impact the Autonomous Control mode.
- **Local Control mode**: The operational control is managed by local control inputs (digital I/O). When the avatar is in Local Control mode, the configured PV Control input conditions need to be satisfied.

The operational control of the avatar can transition out of the configured control mode based on the following two conditions:

- The system degraded mode status
- The manual mode override status

Pump & Ventilator Avatar Control Modes

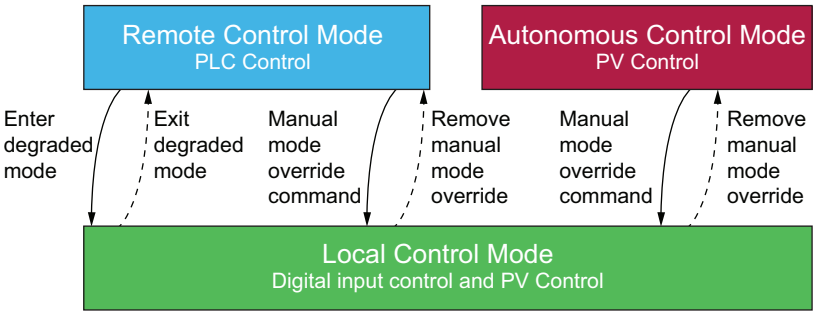

Configured Control Mode:

- Remote Control mode: The avatar transitions into Local Control mode if the system enters degraded mode or if the avatar Manual Mode Override command is issued. The avatar transitions from Local Control mode back to the configured Remote Control mode when the system is not in degraded mode and the avatar Manual Mode Override is not issued.
- Autonomous Control mode: The avatar transitions into Local Control mode if this avatar Manual Mode Override command is issued. The system degraded mode status does not impact the Autonomous Control mode. The avatar transitions from Local Control mode back to the configured Autonomous Control mode when the avatar Manual Mode Override command is not issued.

Configurable PV Control Inputs

PV Control inputs allow you to select the following:

- PV Control Input Source (PV Input, PV Switch) from the configured PV inputs and switches for the avatar
- PV Control Logic (Positive, Negative) of each input source that determines how the **Pump & Ventilator** will operate

PV Control Input Settings

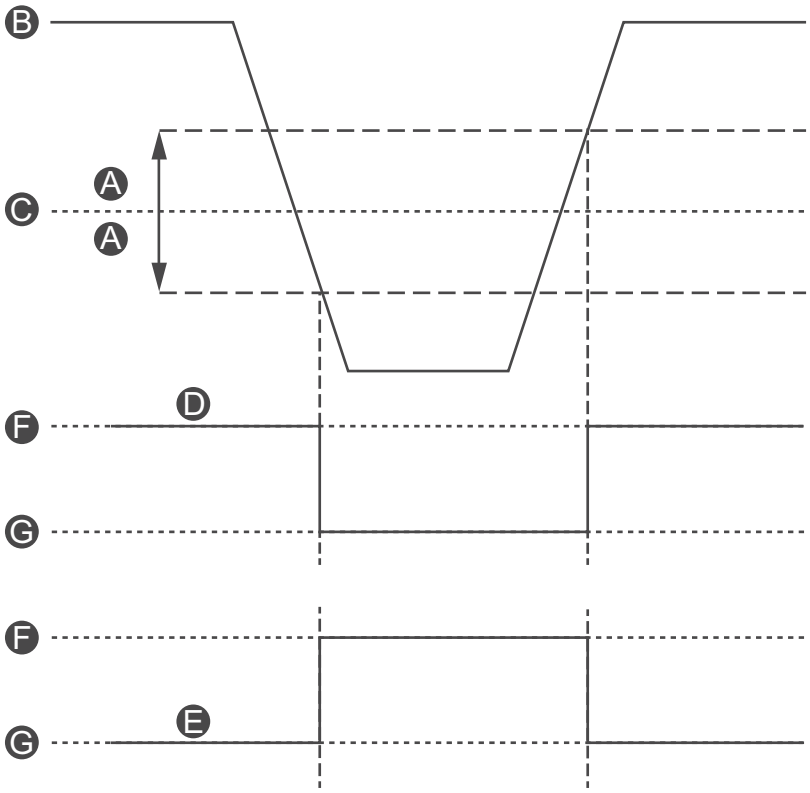

A	PV Control Hysteresis	E	PV Control Status (Negative Logic)
B	PV Input Value	F	ON
C	PV Control Level	G	OFF
D	PV Control Status (Positive Logic)		

PV Control inputs configured with an analog PV Input source also have a configurable PV Control Hysteresis percentage that can be set.

NOTE: Hysteresis is a window to avoid spurious state changes with small signal variations on analog sensors.

For example, if the control input level is set at 10 °C with a PV Control Hysteresis of 10%, this would trigger a change in the **Pump & Ventilator** command:

- When crossing 9 °C in the decreasing temperature direction
- When crossing 11 °C in the increasing temperature direction

If the PV Control Hysteresis setting for a PV Control input is updated while the system is operational, to avoid unexpected behavior, the PV Control input state does not immediately change. The PV Control input changes state when the input value crosses the updated threshold in the appropriate direction.

The configurable PV Control Logic setting for positive and negative logic for the PV Control inputs are as follows:

- **Positive Logic**: The PV Control input provides a Run command to the avatar when the associated PV input is above the PV control level (with hysteresis) or the associated PV switch is a logical high (that is, 11 °C). The PV Control input provides a Stop command to the avatar when the associated PV input is below the PV control level (with hysteresis) or the associated PV switch is a logical low (that is, 9 °C).
- **Negative Logic**: The logic is inverted compared to the Positive Logic configuration. The PV Control input provides a Run command to the avatar when the associated PV input is below the PV control level (with hysteresis) or the associated PV switch is a logical low (that is, 11 °C). The PV Control input provides a Stop command to the avatar when the associated PV input is above the PV control level (with hysteresis) or the associated PV switch is a logical high (that is, 9 °C).

The PV Control mode setting determines if the **Pump & Ventilator** operates based on separate or combined PV control.

- **Separate Control**: If either one of the PV Control inputs status is On, PV Control input provides a Run command to the avatar.
- **Combined**: Both PV Control inputs based on the PV Control Logic, PV Control Hysteresis, and the PV Control Level settings must provide a Run command to the avatar.

Conveyor Avatars

There are four conveyor application avatars, which include the following:

- Standard or SIL(14) starter modules
- One or more digital I/O modules for PV switches and local control inputs
- One or more analog I/O modules for PV inputs and motor temperature monitoring, if enabled
- Configurable control logic

Conveyor Avatars Control Modes

The conveyor avatars have two types of Control modes, described below. You can select the type of Control mode for the avatar during the configuration of the avatar.

- **Remote Control mode**: The operational control is managed by the PLC.
- **Local Control mode**: The operational control is managed by local control inputs (digital I/O).

The operational control of the avatar can transition out of the configured Control mode based on the system degraded mode status condition.

(14) Safety Integrity Level according to standard IEC 61508.

Conveyor Avatar Control Modes

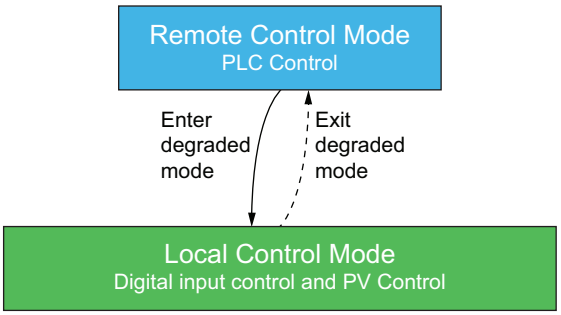

Configured Control Mode:

- Remote Control mode: The avatar transitions into Local Control mode if the system enters degraded mode. The avatar transitions from Local Control mode back to the configured Remote Control mode when the system is not in degraded mode.

Conveyor One Direction avatars include a local control input on a digital I/O module. You can connect the input port to a selector switch on the operator control panel, which sends a Run command to the avatar.

Conveyor Two Direction avatars include multiple local control inputs on one or more digital I/O modules. You can connect the input ports to a selector switch on the operator control panel, which sends a command to the avatar to run in the forward or reverse direction.

Load Avatars

Standard (non-SIL(15)) load avatars include the following:

- Standard starter modules
- One or more digital I/O modules for PV switches and local control inputs
- One or more analog I/O modules for PV inputs and motor temperature monitoring, if enabled
- Configurable control logic is enabled for the avatar when the Local Control Enabled Avatar Parameter is set to Yes during the build phase.

(15) Safety Integrity Level according to standard IEC 61508.

The load avatars that include configurable control logic are as follows:

- Motor One Direction
- Motor Two Directions
- Motor Y/D One Direction
- Motor Y/D Two Directions
- Motor Two Speeds
- Motor Two Speeds Two Directions
- Motor One Direction-SIL Stop, W. Cat 1/2
- Motor One Direction-SIL Stop, W. Cat 3/4
- Motor Two Directions-SIL Stop, W. Cat 1/2
- Motor Two Directions-SIL Stop, W. Cat 3/4
- Motor Two Speeds-SIL Stop, W .Cat 1/2
- Motor Two Speeds-SIL Stop, W. Cat 3/4
- Motor Two Speeds Two Directions-SIL Stop, W. Cat 1/2
- Motor Two Speeds Two Directions-SIL Stop, W. Cat 3/4
- Resistor
- Power Supply
- Transformer
- Power Interface with IO

  NOTE: Profibus communication is not functional, when **Power Interface With IO** avatar is used in TeSys island.

Load Avatars Control Modes

The load avatars have two types of control modes, described below. You can select the type of Control mode for the avatar during the configuration of the avatar.

- **Remote Control mode**: The operational control is managed by the PLC.
- **Local Control mode**: The operational control is managed by local control inputs (digital I/O).

The operational control of the avatar can transition out of the configured control mode based on the following two conditions:

- The system degraded mode status
- The manual mode override status

Load Avatar Control Modes

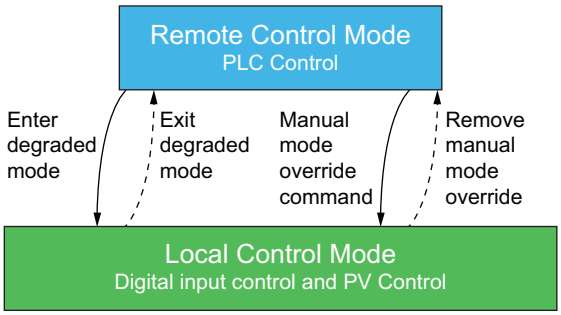

Configured Control Mode:

- Remote Control mode: The avatar transitions into Local Control mode if the system enters degraded mode or if the avatar Manual Mode Override command is issued. The avatar transitions from Local Control mode back to the configured Remote Control mode when the system is not in degraded mode and the avatar Manual Mode Override is not issued.

Load avatars can include multiple local control inputs on one or more digital I/O modules. You can connect the input ports to a selector switch on the operator control panel, which sends a command to the avatar to run in the forward or reverse direction, as well as in low or high speed, depending on the avatar.

Avatar Predictive Alarms

Predictive Alarms (PA) alert you of possible events regarding the applications being monitored. Predictive Alarms are triggered by a combination of configured protection functions and PV Input conditions. This section describes the configuration and requirements for the Predictive Alarms function.

The following is the list of avatars with configurable predictive alarms:

- Motor One Direction
- Motor Two Directions
- Motor Y/D One Direction
- Motor Y/D Two Directions
- Motor Two Speeds
- Motor Two Speeds Two Directions
- Pump & Ventilator
- Conveyor One Direction
- Conveyor One Direction - SIL Stop, W. Cat 1/2(16)
- Conveyor Two Directions
- Conveyor Two Directions - SIL Stop, W. Cat 1/2

You can set up Predictive Alarms to send a specific message for a protection function without assigning a PV Input condition. PV Input conditions that trigger Predictive Alarms occur when the configured PV Inputs for the avatar are within a selected region of operation based on configurable thresholds. When either the protection function alarm resets or the PV Inputs exit the selected region of operation, the Predictive Alarm resets. Avatars support up to ten Predictive Alarms.

Avatars with Predictive Alarms support the following behavior for the PV Input PA Status output, applying a hysteresis of 5% (rounding down, from the range of valid values).

NOTE: Hysteresis is a window to avoid spurious state changes with small signal variations on analog sensors.

(16) Safety Integrity Level according to standard IEC 61508. Wiring Category 1 and Category 2 according to ISO 13849.

Predictive Alarm Hysteresis

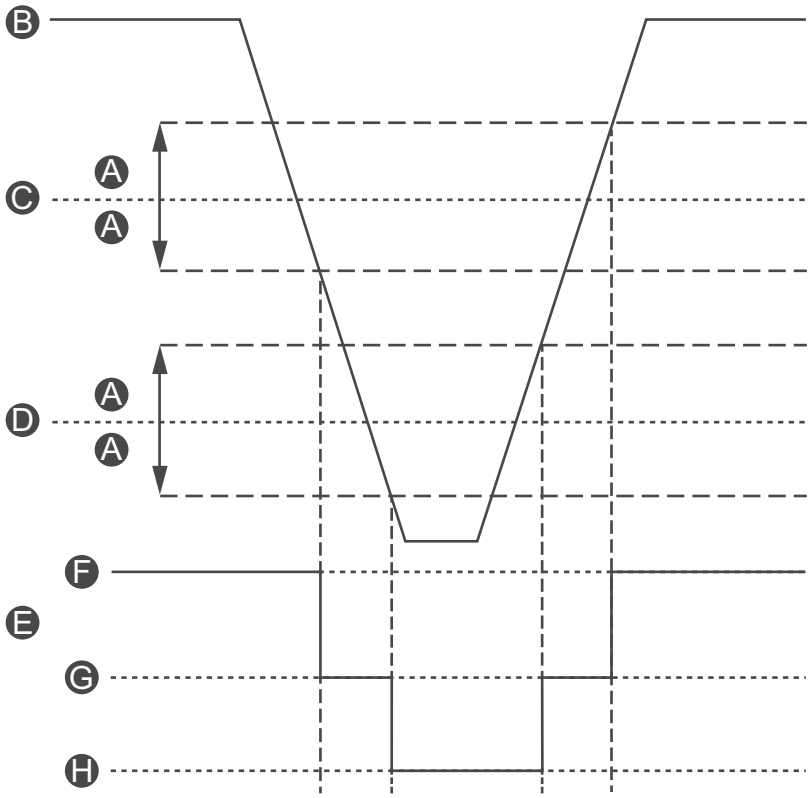

A	Hysteresis	E	PV Input PA Status
B	PV Input value	F	High
C	PV Input PA High Threshold	G	Nominal
D	PV Input PA Low Threshold	H	Low

The following settings are needed to configure Predictive Alarms on avatars with Predictive Alarms support:

- Alarm Input
- Alarm Definition

Alarm Input

There are two Alarm Inputs that can be set up for the avatar: Alarm Input 1 and Alarm Input 2. You can set up a unique type of input for each of these alarm inputs. The following inputs are available:

- Temperature
- Pressure
- Flow
- Vibration
- Proximity
- Generic

Each Predictive Alarm Input has the following two alarm threshold values that you can set:

- Alarm High Threshold Value: Specifies the threshold between the low and nominal region of operation
- Alarm Low Threshold Value: Specifies the threshold between the high and nominal regions of operation

Nominal is the region between the high and low threshold values. For example, if the high threshold value is set at 10 °C and the low threshold value is set at 2 °C, anything greater than 10 °C is considered high threshold values. Low threshold values are 0–2 °C. The nominal range is from 2–10 °C.

Alarm Definition

Up to ten Predictive Alarms can be set up for the avatar. Each Predictive Alarm Definition includes the following settings and outputs:

Type of Protection

This is the protection function alarm assigned to the Predictive Alarm. The following protection functions are available for the Predictive Alarms:

- None: This setting disables the Predictive Alarm.
- Thermal Overload
- Motor Overheat
- Jam
- Undercurrent
- Overcurrent
- Ground Current
- Current Phase Unbalance

PV Input Trigger

You can assign up to three PV Input Triggers to the Predictive Alarm. The following regions of operation are available for each PV Input Trigger:

- None
- PVInput1: Low
- PVInput1: Nominal
- PVInput1: High
- PVInput2: Low
- PVInput2: Nominal
- PVInput2: High

Predictive Alarm Message

Up to 150 characters of application-specific text can be associated with the Predictive Alarm.

Predictive Alarms are triggered when the result of the logical AND of the following configured PA settings is True. The Predictive Alarms are reset when the result of the logical AND of these PA settings is False.

- PA Protection Function Trigger
- PA PV Input Condition Trigger 1
- PA PV Input Condition Trigger 2
- PA PV Input Condition Trigger 3

Predictive Alarms consider any PA Protection Function Trigger configured with a value of None to be False. This provides a mechanism to disable the Predictive Alarm. Predictive Alarms consider any PA PV Input Condition Trigger configured with a value of None to be True.

Predictive Alarms Examples—Pump & Ventilator Avatar

The following are working examples of how to set up Predictive Alarms for the **Pump & Ventilator** avatar. Combining the protection functions and PV Input conditions allows you to set up example Predictive Alarms for the **Pump & Ventilator** avatar as shown below. Remember, these are only examples. Predictive Alarms can be customized to provide more accurate alarms for an avatars specific application.

Examples of Predictive Alarm Messages—Pump & Ventilator Avatar

Protection Type	Alarm Input Sensor Type					
	Temperature	**Pressure**	**Flow**	**Vibration**		**Generic Alarms**
	PV Input Trigger					
	PVInput < Low Temperature	**PVInput < Low Pressure**	**PVInput < Low Flow**	**PVInput1 < Low Flow Value, and PVInput2 > High Vibration**	**PVInput > High Vibration**	**All PVInput Triggers = None (not configured)**
Thermal Overload	High Viscosity	X	Friction Force Increase	Impeller Jam	Check alignment or bearings	Mechanical seal or bent shaft, or impeller jam
Motor Overheat	X	Dry run or seals worn out	Material in impeller or heavy sludge (sand/silt)	Dry run or inspect line for blockage or closed valve	Check alignment or bearings	No cooling or high ambient temp or tight seal alarm, or multiple starts without cool-time
Jam	X	Cut-out fused, hose blocked, clogged, or frozen, or has come off one end	Impeller jam	Valve stuck, or blocked impeller. Suction intake or leakage.	Inspect impeller	Impeller jam or broken, or check transducers or air-locked
Undercurrent	X	Dry run	Clogged inlet, or inspect line for closed valve	Cavitation or dry run	Inspect impeller	Check coupling, inspect line for blockage, or check inlet
Overcurrent	High Viscosity	**Pump & Ventilator** run-out or broken pipe	Closed discharge valve or discharge cavitation	X	Check alignment or bearings	Binding shaft or bad bearings, or check impeller
None	Low PV Temperature	Low PV pressure	Low PV flow	No flow and high PV vibration	High PV vibration	X

Avatar Functional Description

What's in This Chapter

Avatar Function Allocation 58
Protection Functions.....60

Avatar Function Allocation

In the following table, a check mark ✓ indicates the function groups that are possible with each TeSys avatar.

⚠WARNING

UNINTENDED EQUIPMENT OPERATION

Avatar current will be shown as 0 even though there is device level current when the current value is less than 10% of the FLA.

Make sure to select correct starter based on the load current.

Failure to follow these instructions can result in death, serious injury, or equipment damage.

Avatar Function Allocation – Protection and Monitoring

Name	Current Monitoring	Upstream Voltage Presence	Electrical Protection	Load Protection	Motor Overheat Protection(17)	Energy Monitoring(18)
System avatar	—	—	—	—	—	✓
Switch	✓	✓	✓	—	—	—
Switch - SIL Stop, W. Cat 1/2(19)	✓	✓	✓	—	—	—
Switch - SIL Stop, W. Cat 3/4(20)	✓	✓	✓	—	—	—
Digital I/O	—	—	—	—	—	—
Analog I/O	—	—	—	—	—	—
Power Interface without IO (measure)	✓	✓	✓	✓	✓	✓
Power Interface with IO (control)	✓	✓	✓	✓	✓	✓
Motor One Direction	✓	✓	✓	✓	✓	✓
Motor One Direction - SIL Stop, W. Cat 1/2	✓	✓	✓	✓	✓	✓
Motor One Direction - SIL Stop, W. Cat 3/4	✓	✓	✓	✓	✓	✓
Motor Two Directions	✓	✓	✓	✓	✓	✓
Motor Two Directions - SIL Stop, W. Cat 1/2	✓	✓	✓	✓	✓	✓
Motor Two Directions - SIL Stop, W. Cat 3/4	✓	✓	✓	✓	✓	✓
Motor Y/D One Direction	✓	✓	✓	✓	✓	✓
Motor Y/D Two Directions	✓	✓	✓	✓	✓	✓

(17) With analog I/O module.
(18) With voltage interface module.
(19) Safety Integrity Level according to standard IEC 61508. Wiring Category 1 and Category 2 according to ISO 13849.
(20) Safety Integrity Level according to standard IEC 61508. Wiring Category 3 and Category 4 according to ISO 13849.

Avatar Function Allocation – Protection and Monitoring (Continued)

Name	Current Monitoring	Upstream Voltage Presence	Electrical Protection	Load Protection	Motor Overheat Protection(21)	Energy Monitoring(22)
Motor Two Speeds	✓	✓	✓	✓	✓	✓
Motor Two Speeds - SIL Stop, W. Cat 1/2	✓	✓	✓	✓	✓	✓
Motor Two Speeds - SIL Stop, W. Cat 3/4	✓	✓	✓	✓	✓	✓
Motor Two Speeds Two Directions	✓	✓	✓	✓	✓	✓
Motor Two Speeds Two Directions - SIL Stop, W. Cat 1/2	✓	✓	✓	✓	✓	✓
Motor Two Speeds Two Directions - SIL Stop, W. Cat 3/4	✓	✓	✓	✓	✓	✓
Resistor	✓	✓	✓	✓	—	✓
Power Supply	✓	✓	✓	✓	—	✓
Transformer	✓	✓	✓	✓	—	✓
Pump & Ventilator	✓	✓	✓	✓	✓	✓
Conveyor One Direction	✓	✓	✓	✓	✓	✓
Conveyor One Direction - SIL Stop, W. Cat 1/2	✓	✓	✓	✓	✓	✓
Conveyor Two Directions	✓	✓	✓	✓	✓	✓
Conveyor Two Directions - SIL Stop, W. Cat 1/2	✓	✓	✓	✓	✓	✓

In the following table, a check mark ✓ indicates the function groups that are possible with each TeSys avatar.

Avatar Function Allocation—Predictive Alarms, PV, and Control Modes

Name	Predictive Alarms	Process Variable Monitoring	Configurable Control Modes
System avatar	—	—	—
Switch	—	—	—
Switch - SIL Stop, W. Cat 1/2(23)	—	—	—
Switch - SIL Stop, W. Cat 3/4(24)	—	—	—
Digital I/O	—	—	—
Analog I/O	—	—	—
Power Interface without IO (measure)	—	—	—
Power Interface with IO (control)	—	—	✓
Motor One Direction	✓	✓	✓
Motor One Direction - SIL Stop, W. Cat 1/2	—	—	✓
Motor One Direction - SIL Stop, W. Cat 3/4	—	—	✓
Motor Two Directions	✓	✓	✓
Motor Two Directions - SIL Stop, W. Cat 1/2	—	—	✓
Motor Two Directions - SIL Stop, W. Cat 3/4	—	—	✓

(21) With analog I/O module.
(22) With voltage interface module.
(23) Safety Integrity Level according to standard IEC 61508. Wiring Category 1 and Category 2 according to ISO 13849.
(24) Safety Integrity Level according to standard IEC 61508. Wiring Category 3 and Category 4 according to ISO 13849.

Avatar Function Allocation—Predictive Alarms, PV, and Control Modes (Continued)

Name	Predictive Alarms	Process Variable Monitoring	Configurable Control Modes
Motor Y/D One Direction	✓	✓	✓
Motor Y/D Two Directions	✓	✓	✓
Motor Two Speeds	✓	✓	✓
Motor Two Speeds - SIL Stop, W. Cat 1/2	—	—	✓
Motor Two Speeds - SIL Stop, W. Cat 3/4	—	—	✓
Motor Two Speeds Two Directions	✓	✓	✓
Motor Two Speeds Two Directions - SIL Stop, W. Cat 1/2	—	—	✓
Motor Two Speeds Two Directions - SIL Stop, W. Cat 3/4	—	—	✓
Resistor	—	—	✓
Power Supply	—	—	✓
Transformer	—	—	✓
Pump & Ventilator	✓	✓	✓
Conveyor One Direction	✓	✓	✓
Conveyor One Direction - SIL Stop, W. Cat 1/2	✓	✓	✓
Conveyor Two Directions	✓	✓	✓
Conveyor Two Directions - SIL Stop, W. Cat 1/2	✓	✓	✓

Protection Functions

TeSys island offers a wide range of load protection functions (including thermal protection) and electrical protection functions. These functions can be enabled for each applicable TeSys avatar, and configured to react to given operational conditions, by signaling alarm messages and triggering load trips.

⚠WARNING

UNINTENDED EQUIPMENT OPERATION

Do not disable the protection settings.

Failure to follow these instructions can result in death, serious injury, or equipment damage.

⚠WARNING

UNINTENDED EQUIPMENT OPERATION

Make sure to set the protection functions parameters according to the required protection level of the controlled motors and loads.

Failure to follow these instructions can result in death, serious injury, or equipment damage.

The following table lists the protection functions available for all avatars. The functions can be enabled and configured individually.

Protection Functions

Load Protection Functions	Thermal Protection Functions
• Jam • Long Start • Stall • Undercurrent • Overcurrent • Rapid Cycle Lockout • Rapid Restart Lockout	• Thermal Overload • Motor Overheat
	Electrical Protection Functions • Phase Configuration • Current Phase Unbalance • Current Phase Loss • Ground Current Detection • Current Phase Reversal

The following table defines parameters that are associated with multiple protection functions. They are referred to throughout the protection function sections in this guide.

Common Protection Function Parameters

Parameter	Definition
<*function name*> Trip Enable	Enables the trip function
<*function name*> Trip Delay	A time setting specifying the duration that a trip condition must exist to trigger a trip
<*function name*> Trip Level	A setting to define the level of an input that triggers a trip
<*function name*> Alarm Enable	Enables the alarm function
<*function name*> Alarm Level	A setting to define the level of an input that triggers an alarm

About Motor Start and Run States

Based on the electrical consumption of the driven motor, TeSys island identifies whether the motor is in the Off, Start, or Run state. These states, along with the enable setting, determine which protection functions apply. For instance, the Undercurrent protection function does not apply to a motor in the Off state.

The motor states are defined by the following:

- Off state: the measured current is less than or equal to 30% Ir.
- Start state: this state begins after the Off state, with the detection of a measured current greater than 30% Ir. It continues until a transition occurs to Run state (or Off).
- Run State (condition 1): The Long Start Trip protection function is disabled. The detected current stays between 30% Ir and the Long Start Trip Level for the time defined by the Long Start Trip Delay. (The timer starts at the beginning of the Start state.)
- Run State (condition 2): The Long Start Trip protection function is disabled. The detected current rises above the Long Start Trip Level, and does not fall below the Long Start Trip Level within the time defined by Long Start Trip Delay. (The timer starts at the beginning of the Start state.)
- Run State (condition 3): The detected current rises above Long Start Trip Level and then falls below the Long Start Trip Level.

Run State

The following figures illustrate the different transitions from the Start State to Run State.

Run State (Condition 1)

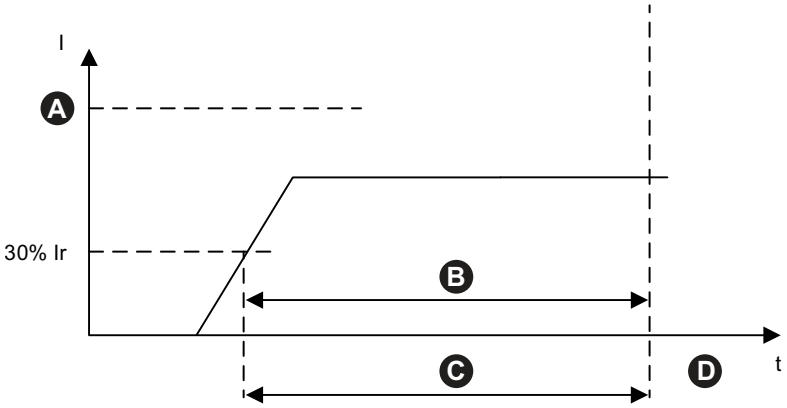

I	Current	**Ir**	Rated Current
A	Long Start Trip Level	**B**	Long Start Trip Delay
C	Start State	**D**	Run State
t	Time		

Run State (Condition 2)

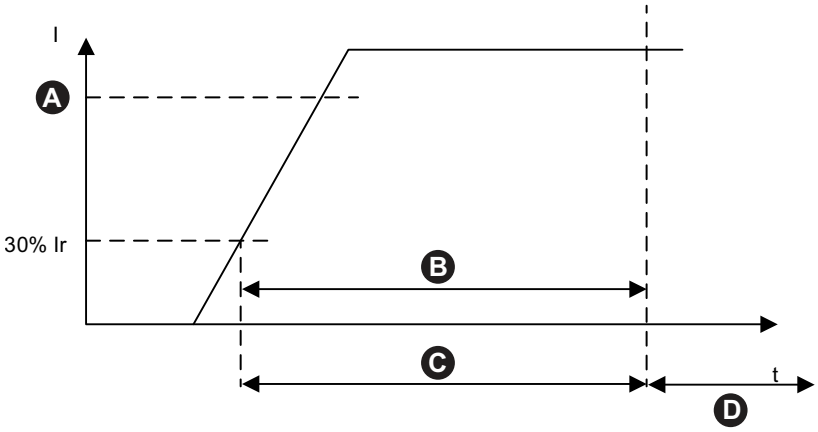

I	Current	**Ir**	Rated Current
A	Long Start Trip Level	**B**	Long Start Trip Delay
C	Start State	**D**	Run State
t	Time		

Run State (Condition 3)

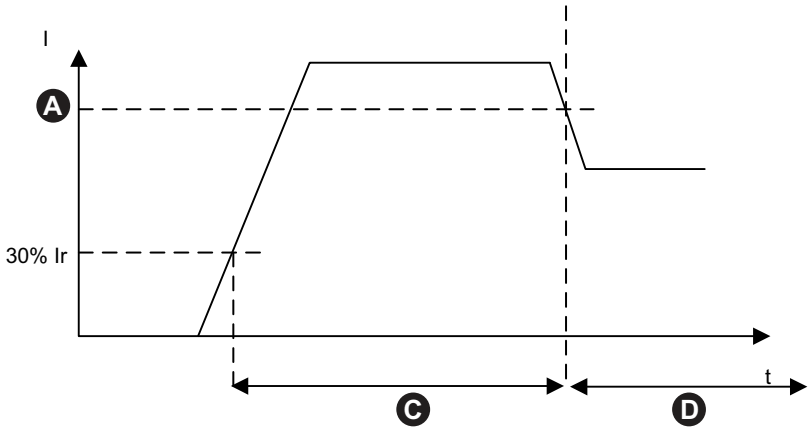

I	Current	**Ir**	Rated Current
A	Long Start Trip Level	**C**	Start State
D	Run State	**t**	Time

Protection Settings

The following tables provide the range settings for the protection setting values.

Electrical Protection

Electrical Protection Settings Values

Setting Name	Value Range	Default Value	Increment
Ground Current Trip Delay	0.1–1.0 s	1 s	0.1
Ground Current Trip Level	20–100%(25) FLA	50%	1
Ground Current Alarm Level	20–100%(25) FLA	50%	1
Current Phase Unbalance Trip Delay - Start	2–20 s	2 s	0.1
Current Phase Unbalance Trip Delay - Run	2–20 s	5 s	0.1
Current Phase Unbalance Trip Level	10–70%	20%	1
Current Phase Unbalance Alarm Level	10–70%	10%	1
Current Phase Loss Trip Delay	0.1–30 s	3 s	0.1
Current Phase Loss Trip Level	80%	80%	–
Current Phase Sequence	ABC ACB	ABC	–

(25) 50–100% for FLA<1A

Thermal Protection

Thermal protection settings values

Setting Name	Value Range	Default Value	Incre-ment
Ir (FLA)	0.18–9 A (TPR••009) 0.50–25 A (TPR••025) 0.76–38 A (TPR••038) 3.25–65 A (TPR••065) 4–80 A (TPR••080)	0.18 A 0.50 A 0.76 A 3.25 A 4 A	0.01
Ir (FLA) 2	0.18–9 A (TPR••009) 0.50–25 A (TPR••025) 0.76–38 A (TPR••038) 3.25–65 A (TPR••065) 4–80 A (TPR••080)	0.18 A 0.50 A 0.76 A 3.25 A 4 A	0.01
Thermal Overload Trip Class	5–30	10	—
Thermal Overload Reset Threshold	10–95%	85%	1
Thermal Overload Alarm Level	10–100%	85%	1
Motor Overheat Trip Delay	0–10 s	5 s	0.1
Motor Overheat Trip Level	0–200 °C	0 °C	1
Motor Overheat Reset Threshold	0–200 °C	0 °C	1
Motor Overheat Alarm Threshold	0–200 °C	0 °C	1
Motor Overheat Temperature Sensor	PT 100 PT 1000 NI 100 NI 1000 PTC Binary	PT 100	—

Load Protection

Load protection settings values

Setting Name	Value Range	Default Value	Increment
Jam Trip Delay	1–30 s	5 s	1
Jam Trip Level	100–800%	200%	1
Jam Alarm Level	100–800%	200%	1
Undercurrent Trip Level	30–100%	50%	1
Undercurrent Trip Delay	1–200 s	1 s	1
Undercurrent Alarm Level	30–100%	70%	1
Long Start Trip Delay	1–200 s	10 s	1
Long Start Trip Level	100–800%	100%	1
Rapid Cycle Lockout Timeout	1–9999 s	300 s	1
Rapid Restart Lockout Timeout	1–9999 s	300 s	1
Overcurrent Trip Level	30–800%	200%	1
Overcurrent Trip Delay	1–250 s	10 s	1
Overcurrent Alarm Level	100–1000%	180%	1

Load protection settings values (Continued)

Stall Trip Delay	1–30 s	5 s	1
Stall Trip Level	50–1000%	250%	1

Load Protection Functions

Jam

The Jam function detects when a motor is jammed during the Run state. The motor either stops or is suddenly overloaded and draws excessive current.

If enabled, this protection function performs the following when the motor is in the Run state:

- Signals a Jam Alarm when the maximum phase current (Imax) exceeds the specified Jam Alarm Level
- Triggers a Jam Trip when the maximum phase current (Imax) exceeds the specified Jam Trip Level for a time longer than the specified Jam Trip Delay

Jam Trip and Alarm

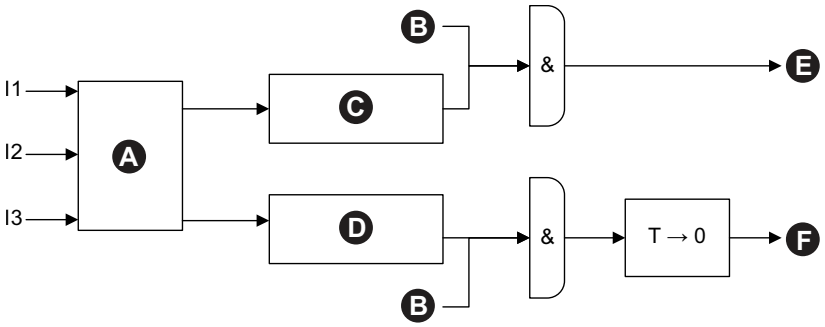

I1	Phase 1 Current	**I2**	Phase 2 Current
I3	Phase 3 Current	**T**	Jam Trip Delay
A	Imax	**B**	Run State
C	Imax ≥ Jam Alarm Level	**D**	Imax ≥ Jam Trip Level
E	Jam Alarm	**F**	Jam Trip

Long Start

The Long Start function detects when a motor remains in the Start state for an excessive period of time.

If enabled, this protection function triggers a Long Start trip when the motor is in the Start state, and one of the following conditions occur during the specified Long Start Trip Delay:

- Average current too low: the average current remains below the specified Long Start Trip Level
- Average current too high: the average current rises above the specified Long Start Trip Level but does not fall below it again.

Long Start Trip

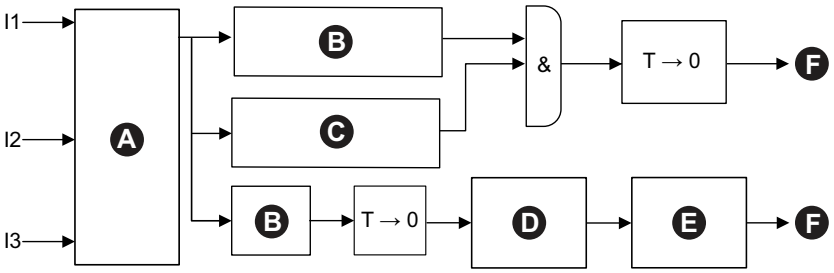

I1	Phase 1 Current	**I2**	Phase 2 Current
I3	Phase 3 Current	**T**	Long Start Trip Delay
A	Iavg	**B**	Iavg ≥ 30%
C	Iavg ≤ Long Start Trip Level	**D**	Iavg ≥ Long Start Trip Level
E	# of Crossings = 1	**F**	Long Start Trip

NOTE: Number of Crossings = the number of times the value of current crossed (from above to below, or below to above) the Long Start Trip Level.

Average Current Continuously Exceeds the Long Start Trip Level (1 Crossing)

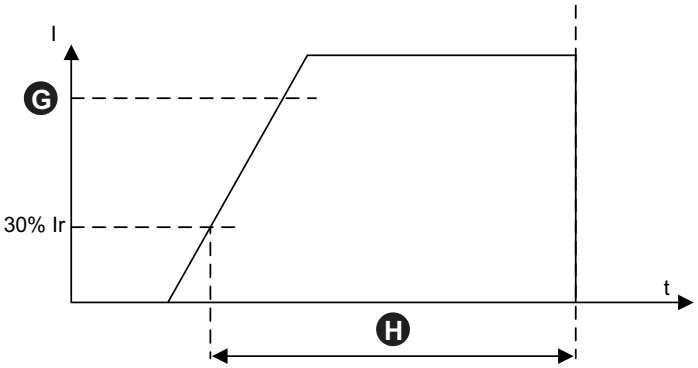

G	Long Start Trip Level	**H**	Long Start Trip Delay (in Start State)
I	Current	**Ir**	Rated Current
t	Time		

Average Current Does Not Reach the Long Start Trip Level

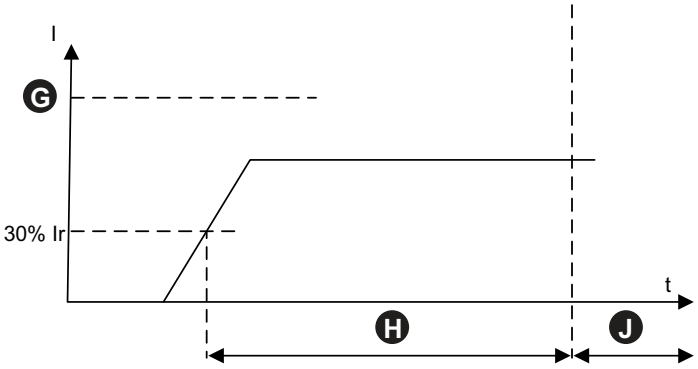

G	Long Start Trip Level	**H**	Long Start Trip Delay (in Start State)
I	Current	**Ir**	Rated Current
J	Run State	t	Time

Stall

The Stall function detects high current intensity, typically associated with a locked or stalled motor, while in the Start state.

If enabled, this protection function triggers a Stall trip when the motor is in the Start state, and the maximum phase current exceeds the specified Stall Trip Level for a time longer than the specified Stall Trip Delay.

NOTE: No Stall detection alarm is associated with this function.

Stall and Trip

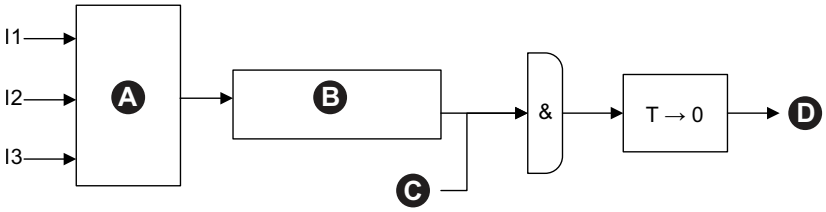

I1	Phase 1 Current	**I2**	Phase 2 Current
I3	Phase 3 Current	**A**	Imax
B	Imax ≥ Stall Trip Level	**C**	Start State
D	Stall Trip	**T**	Stall Trip Delay

This function is typically enabled in addition to the Long Start protection function, setting a higher acceptable current intensity level and a shorter trip delay.

Stall Trip Versus Long Start Trip

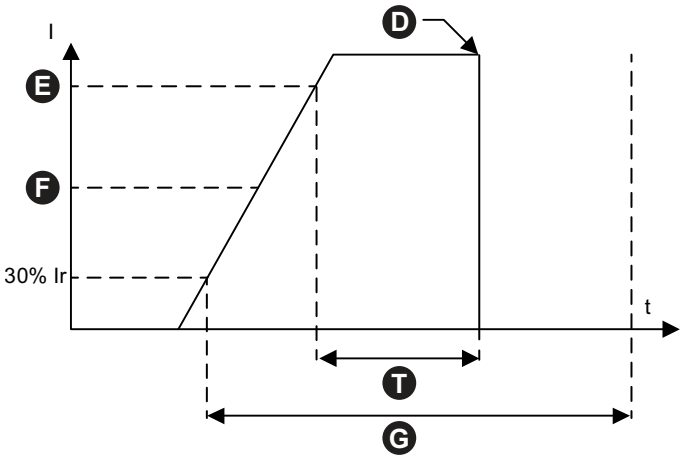

D	Stall Trip	**E**	Stall Level
F	Long Start Trip Level	**G**	Long Start Trip Delay
I	Current	**Ir**	Rated Current
t	Time	**T**	Stall Trip Delay

NOTE: In this illustration, the Stall protection function triggers a trip—while the Long Start protection function does not (because the Long Start Trip Delay has not elapsed yet).

Undercurrent

The Undercurrent function detects unexpected low current consumption during the Run state. This condition is typically associated with motors running free, without a load—for instance, if a drive belt or shaft has broken.

If enabled, this protection function performs the following:

- Signals an Undercurrent Alarm when the average phase current remains below the specified Undercurrent Alarm Level
- If the motor is in the Run state, triggers an Undercurrent Trip when the average phase current remains below the specified Undercurrent Trip Level, for a time longer than the specified Undercurrent Trip Delay

Undercurrent Trip and Alarm

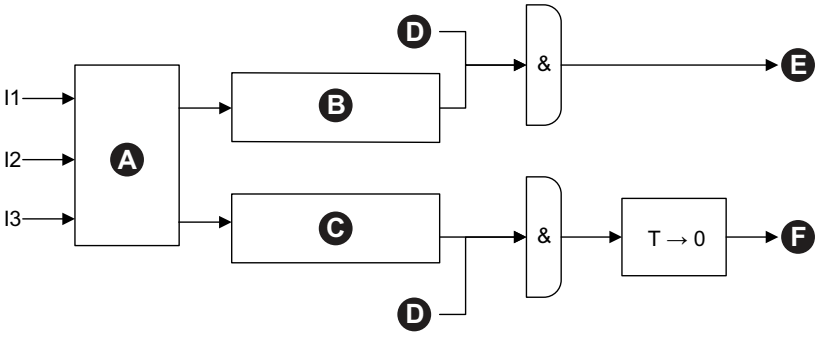

I1	Phase 1 Current	**I2**	Phase 2 Current
I3	Phase 3 Current	**A**	Iavg
B	Iavg ≤ Undercurrent Alarm Level	**C**	Iavg ≤ Undercurrent Trip Level
D	Run State	**E**	Undercurrent Alarm
F	Undercurrent Trip	**T**	Undercurrent Trip Delay

Overcurrent

TeSys avatars with Overcurrent Alarm enabled signal an Overcurrent Alarm if the maximum phase current exceeds the Overcurrent Alarm Level in the motor Run state.

Avatars with Overcurrent Trip enabled signal an Overcurrent Trip if the maximum phase current exceeds the Overcurrent Trip Level in the motor Run state for a time longer than the Overcurrent Trip Delay.

Overcurrent Trip and Alarm

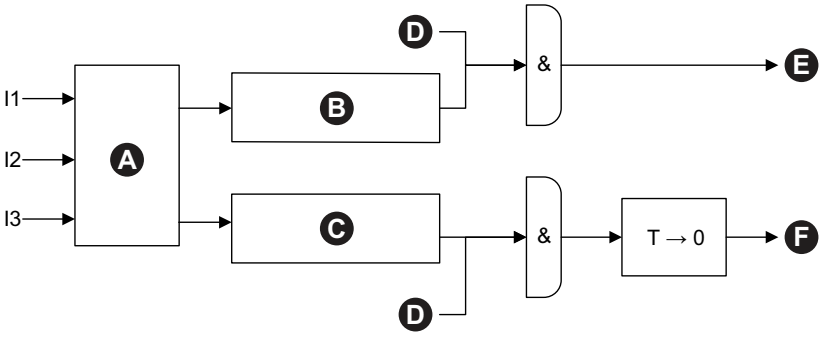

I1	Phase 1 Current	**I2**	Phase 2 Current
I3	Phase 3 Current	**A**	Imax
B	Imax ≥ Overcurrent Alarm Level	**C**	Imax ≥ Overcurrent Trip Level
D	Run State	**E**	Overcurrent Alarm
F	Overcurrent Trip	**T**	Overcurrent Trip Delay

Rapid Cycle Lockout

The Rapid Cycle Lockout function helps prevent potential harm to the motor caused by repetitive, successive inrush currents resulting from too little time between starts.

If this protection function is enabled, the TeSys avatar ignores Run commands for the duration specified by the Rapid Cycle Lockout Timeout, starting from the last transition to the motor Start state.

No alarm or trip is associated with this function.

Rapid Cycle Lockout Timeout

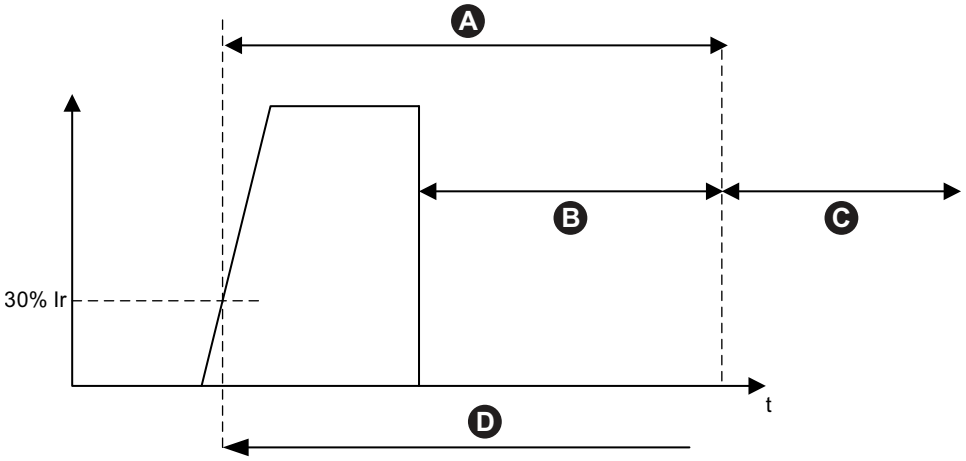

Ir	Rated Current	**A**	Rapid Cycle Lockout Timeout
B	New Run Commands Ignored	**C**	New Run Commands Not Ignored
D	Transition into Motor Start State	**t**	Time

Rapid Restart Lockout

The Rapid Restart Lockout function helps prevent potential harm to the motor caused by repetitive, successive stop and start events.

If this protection function is enabled, the TeSys avatar ignores Run commands for the duration specified by the Rapid Restart Lockout Timeout, starting from the last transition to the motor Off state .

No alarm or trip is associated with this function.

Rapid Restart Lockout

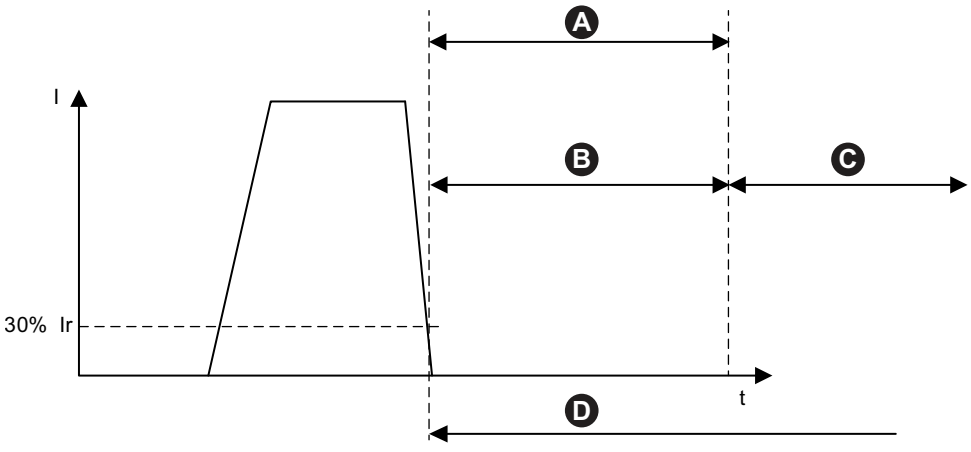

Rapid Restart Lockout

Ir	Rated Current	**I**	Current
A	Rapid Restart Lockout Timeout	**B**	New Run Commands Ignored
C	New Run Commands Not Ignored	**D**	Transition to Motor Off State
t	Time		

Thermal Protection Functions

Thermal Overload

The Thermal Overload protection function is based on a thermal model which calculates the used thermal capacity of the motor.

If enabled, this function performs the following:

- Signals a Thermal Overload Alarm when the motor thermal capacity used exceeds the Overload Alarm Level
- Triggers a Thermal Overload Trip when the motor thermal capacity used exceeds 100%

The Thermal Reset Threshold parameter sets the percentage below which the motor thermal capacity used must fall, before a thermal overload trip reset is allowed.

NOTE: For single phase, thermal overload protection uses only I1 and I3.

Thermal Overload Protection Trip and Alarm

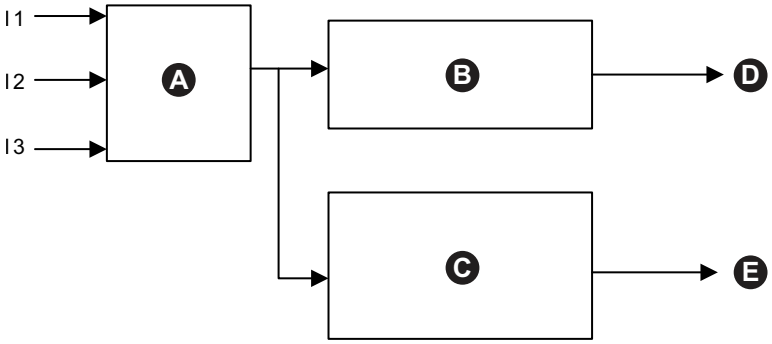

I1	Phase 1 Current	**I2**	Phase 2 Current
I3	Phase 3 Current	**A**	Motor Thermal Model
B	Motor Thermal Capacity Used ≥ 100%	**C**	Motor Thermal Capacity Used ≥ Thermal Overload Alarm Level
D	Thermal Overload Trip	**E**	Thermal Overload Alarm

Motor Overheat

The Motor Overheat function is only available for TeSys avatars whose Temperature Sensor Available parameter is activated. These avatars include an analog I/O module, which is wired to the temperature input from the temperature sensor associated with the protected motor.

If enabled, this protection function performs the following:

- Signals a Motor Overheat Alarm when the motor temperature exceeds the Motor Overheat Alarm Level
- Triggers a Motor Overheat Trip when the motor temperature exceeds the Motor Overheat Trip Level, for a time longer than the Motor Overheat Trip Delay

The Motor Overheat Trip Reset Threshold parameter sets the percentage below which the temperature must fall, before a trip reset is allowed.

Motor Overheat Trip and Alarm

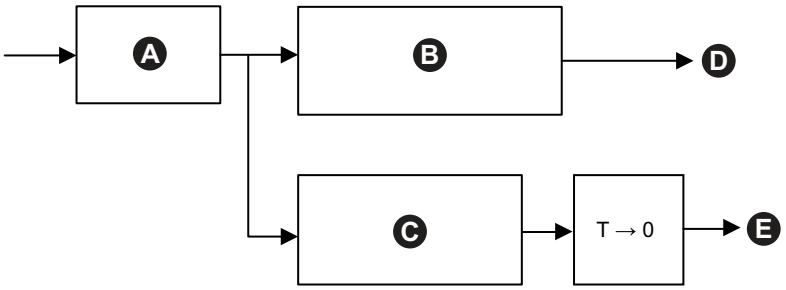

A	Motor Temperature	**B**	Motor Temperature ≥ Motor Overheat Alarm Level
C	Motor Temperature ≥ Motor Overheat Trip Level	**D**	Alarm
E	Trip	**T**	Motor Overheat Trip Delay

Electrical Protection Functions

Electrical protection functions detect electrical problems.

- Phase Configuration
- Current Phase Unbalance
- Current Phase Loss
- Ground Current Detection
- Current Phase Reversal

Phase Configuration

The Phase Configuration function applies only to single-phase TeSys™ avatars. In a single-phase system, this feature is automatically enabled. It triggers a Phase Configuration trip if the current in phase two is greater than 50% Ir FLA for more than 1 s.

NOTE:

- Phase Configuration protection does not apply to three-phase operation.
- TeSys island supports ABC and ACB phase configuration.

Current Phase Unbalance

The Current Phase Unbalance function only applies to three-phase TeSys avatars.

If enabled, this protection function performs the following:

- Signals a Current Phase Unbalance Alarm when the current phase unbalance exceeds the specified Current Phase Unbalance Alarm Level
- Triggers a Current Phase Unbalance Trip when the current phase unbalance exceeds the specified Current Phase Unbalance Trip Level for a time longer than the specified Current Phase Unbalance Trip Delay

  NOTE: Separate trip delays are configurable for Run State and Start State.

Current Phase Unbalance Trip and Alarm

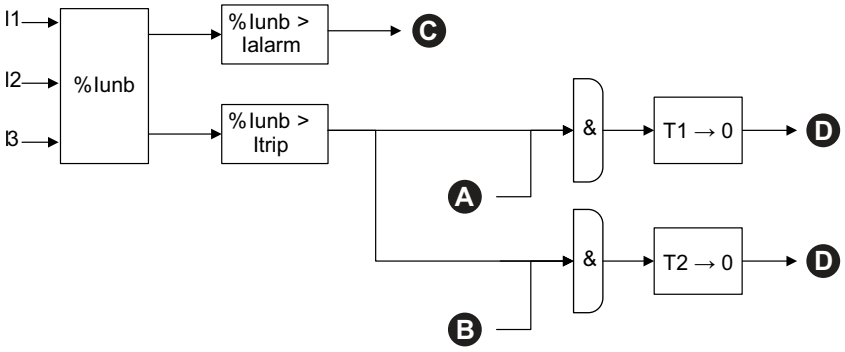

I1	Phase 1 Current	**I2**	Phase 2 Current
I3	Phase 3 Current	**%Iunb**	%Current Phase Unbalance
Ialarm	Current Phase Unbalance Alarm Level	**Itrip**	Current Phase Unbalance Trip Level
T1	Current Phase Unbalance Trip Delay —Start	**T2**	Current Phase Unbalance Trip Delay —Run
A	Motor Start State	**B**	Motor Run State
C	Current Phase Unbalance Alarm	**D**	Current Phase Unbalance Trip

NOTE: The %Current Phase Unbalance value is

- The maximum difference between any individual phase RMS current (in absolute value) and the average of the three-phase RMS currents
- Divided by the average of the three-phase RMS currents

Current Phase Loss

The Current Phase Loss function only applies to three-phase TeSys avatars.

If enabled, then in the motor Start or Run state, this protection function triggers a Current Phase Loss Trip when the current phase unbalance exceeds the Current Phase Loss Trip Level, for a time longer than the Current Phase Loss Trip Delay.

NOTE: The Current Phase Unbalance value is the ratio of the following:

- The maximum difference between any individual phase RMS current (in absolute value) and the average of the three-phase RMS currents
- Divided by the average of the three-phase RMS currents

Current Phase Loss Trip

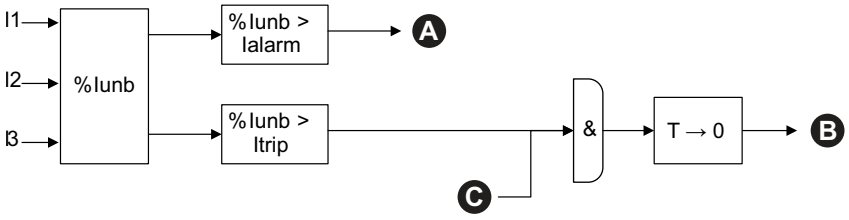

I1	Phase 1 Current	**I2**	Phase 2 Current
I3	Phase 3 Current	**%Iunb**	%Current Phase Unbalance
Ialarm	Current Phase Loss Alarm Level	**Itrip**	Current Phase Loss Trip Level
A	Current Phase Loss Alarm	**B**	Current Phase Loss Trip
C	Motor Start or Run State	**T**	Current Phase Loss Trip Delay

Ground Current Detection

The Ground Current Detection function detects ground currents.

If enabled, this protection function performs the following:

- Signals a Ground Current Detection Alarm when the ground current exceeds the specified Ground Current Alarm Level
- Triggers a Ground Current Detection Trip when the ground current exceeds the specified Ground Current Trip Level, for a time longer than the specified Ground Current Trip Delay

Ground Current Trip and Alarm

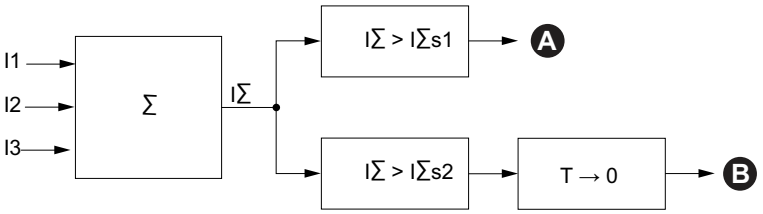

I1	Phase 1 Current	**I2**	Phase 2 Current
I3	Phase 3 Current	**IΣ**	Summation of the Current
IΣs1	Ground Current Alarm Level	**IΣs2**	Ground Current Trip Level
A	Ground Current Alarm	**B**	Ground Current Trip
T	Ground Current Trip Delay		

Phase Reversal

The Phase Reversal function detects incorrect phase sequence in a three-phase system, causing a connected three-phase motor or other rotating equipment to run in the opposite direction than expected.

If enabled, this protection function triggers a Phase Reversal trip if the detected current phase sequence does not match the Current Phase Sequence setting over a time period of 100 ms.

No alarm is associated with this function. The 100 ms time period is not adjustable.

Phase Reversal for Setting ABC

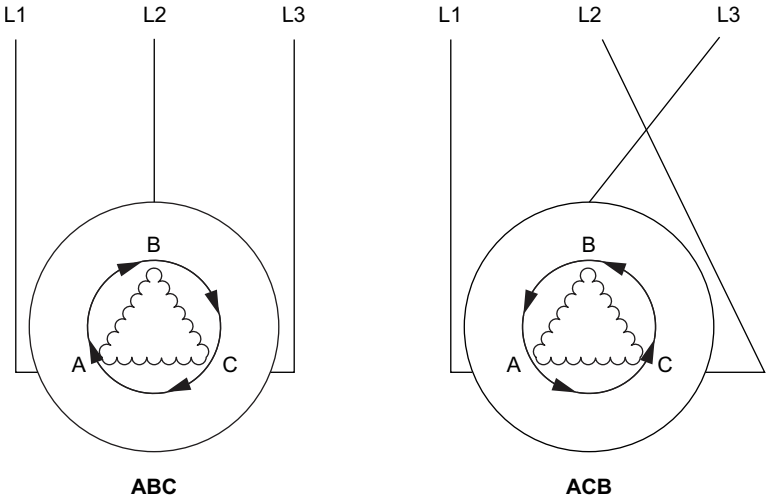

ABC	No Trip	**ACB**	Trip

Alarm and Trip Counters

Protection functions increment alarm and trip event counters, both at the TeSys avatar level and overall at the TeSys island level. Counters can be reset to zero on demand.

The following tables describe counter behavior.

Counter Inputs

Inputs	Description
Alarm Counter Reset	Resets all alarm counters (see the following table) to zero.
Trip Counter Reset	Resets all trip counters (see the following table) to zero. All avatars store the last five trip records, each containing the timestamp and cause of the trip.

List of Alarm Counters

Outputs	Description
Thermal Overload Alarm Count	Increments when an individual alarm is triggered. Reset by Alarm Counter Reset
Jam Alarm Count	
Undercurrent Alarm Count	
Overcurrent Alarm Count	
Current Phase Unbalance Alarm Count	
Ground Current Alarm Count	
All Alarms Count	Increments when any type of protection alarm is triggered. Reset by Alarm Counter Reset.

List of Trip Counters

Outputs	Description
Thermal Overload Trip Count	Increments when an individual trip is triggered. Reset by Trip Counter Reset
Jam Trip Count	
Undercurrent Trip Count	
Long Start Trip Count	
Overcurrent Trip Count	
Stall Trip Count	
Current Phase Unbalance Trip Count	
Phase Configuration Trip Count	
Ground Current Detection Trip Count	
Current Phase Reversal Trip Count	
Current Phase Loss Trip Count	
All Trips Count	Increments when any type of protection trip is triggered. Reset by Trip Counter Reset.

Records of the Last Five Trips

Outputs	Description
Trip Record Register 1 (most recent)	First In First Out registers without reset
Trip Record Register 2	
Trip Record Register 3	
Trip Record Register 4	
Trip Record Register 5 (least recent)	

List of Auto-Reset Counters

Outputs	Description
Thermal Protection Auto-Reset Retry Count	Provides the number of auto-reset retry attempts for Thermal Protection functions. If there is no trip within one minute after a retry attempt, the start is considered successful and Auto Reset Retry Count is reset to 0.
Electrical Protection Auto-Reset Retry Count	Provides the number of auto-reset retry attempts for Electrical Protection functions. If there is no trip within one minute after a retry attempt, the start is considered successful and Auto Reset Retry Count is reset to 0.
Load Protection Auto-Reset Retry Count	Provides the number of auto-reset retry attempts for Load Protection functions. If there is no trip within one minute after a retry attempt, the start is considered successful and Auto Reset Retry Count is reset to 0.

Trip Reset Command

NOTE: The Reset function may lead to immediate energizing of the load, with an active command from the PLC or the Force mode function.

⚠WARNING

UNINTENDED EQUIPMENT OPERATION

Before resetting the protection functions, verify that this function does not result in unsafe conditions.

Failure to follow these instructions can result in death, serious injury, or equipment damage.

A tripped TeSys avatar can only reset protection trips after receiving a Trip Reset command and if all the trip reset conditions are met for all its protection functions. This mechanism helps ensure that, after a trip, normal operation can only resume when all the defined normal operational conditions are met again.

When a protection function has caused an avatar to trip, the avatar remains in the tripped state until both of the following occur:

- The operational conditions again match the trip reset conditions of the protection function
- The avatar receives a Trip Reset command

The Trip Reset command applies to all the protection functions enabled for a given avatar. However:

- The Tripped state output is set to false only for those protection functions whose trip reset conditions are met.
- The Tripped status output remains set to true for those protection functions whose trip reset conditions are still not met.

A tripped avatar has at least one tripped protection function (with a Tripped status set to true).

According to the same logic, an avatar that is not tripped has no tripped protection functions (no protection with a Tripped status set to true).

Tripped protection functions can be reset by the Auto-Reset function, via the controller or by using one of the digital tools.

NOTE: The Tripped status of all protection functions is maintained through a power cycle of the system with the exception of the Current Phase Reversal and Phase Configuration functions. For these functions, a power cycle resets the Tripped status (to not tripped).

The following table describes the Trip Reset Conditions, including hysteresis, for all avatars.

Trip reset conditions

Protection function	Trip reset conditions
Thermal Overload	Thermal capacity has decreased below Thermal Reset Threshold (no hysteresis).
Motor Overheat	Motor temperature has decreased below Motor Overheat Reset Threshold (no hysteresis).
Current Phase Unbalance	Current unbalance has decreased below Current Phase Unbalance Trip Level.
Current Phase Loss	Current unbalance has decreased below Current Phase Loss Trip Level.
Jam	Maximum phase current has decreased below Jam Trip Level.
Undercurrent	Average current has increased above Undercurrent Trip Level.
Long Start	Average current has decreased below 30% Ir (no hysteresis).
Overcurrent	Maximum phase current has decreased below Overcurrent Trip Level.
Stall	Maximum phase current has decreased below Stall Trip Level.
Ground Current	Ground current has decreased below Ground Current Trip Level.
Current Phase Reversal	Average current has decreased below 30% Ir (no hysteresis).
Phase Configuration	Average current has decreased below 30% Ir (no hysteresis).

Where indicated, protection functions apply a 5% hysteresis value to the trip reset conditions. This increases the stability of the protection functions' behavior. The trip reset is only authorized when normal conditions and this extra 5% margin are recovered.

For instance, the Jam protection function triggers a trip when the maximum phase current exceeds the defined Jam trip level. The trip reset conditions are met when the maximum phase current decreases below the Jam trip level minus 5%.

Additionally, setting the Trip Enable parameter for a protection function to Disable meets the Trip reset condition for that protection function.

Hysteresis

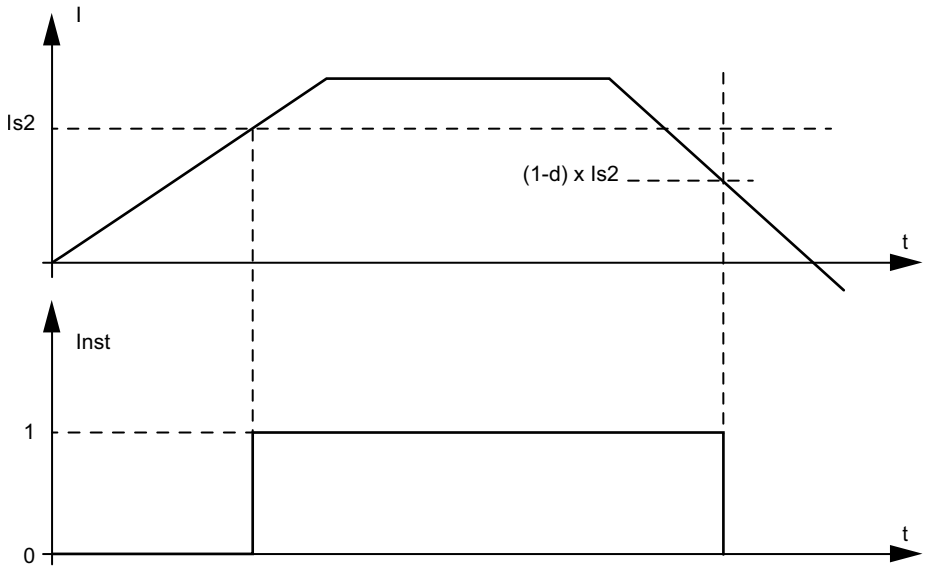

NOTE: d = Hysteresis percentage

Trip Auto-Reset Function

NOTE: The Auto-Reset function may lead to immediate energizing of the load, with an active command from the PLC or the Force mode function.

⚠WARNING

UNINTENDED EQUIPMENT OPERATION

Configure this function in a such a way that it does not result in unsafe conditions.

Failure to follow these instructions can result in death, serious injury, or equipment damage.

The Automatic Reset function triggers trip reset commands automatically, without the intervention of a human operator. This function can be configured separately for each Thermal group, Electrical group, and Load group of protection functions of a TeSys™ avatar.

The following table defines the Auto-Reset groups.

Auto-reset groups

Auto-reset group	Protection trip cause
Load Protection	Jam
	Long Start
	Stall
	Undercurrent
	Overcurrent
Thermal Protection	Thermal Overload
	Motor Overheat
Electrical Protection	Phase Configuration
	Current Phase Unbalance
	Current Phase Loss
	Ground Current Detection
	Current Phase Reversal

For each group, you can configure the following:

- A delay before a reset attempt
- Functionality to repeat reset attempts

The Auto-Reset function ultimately works as the Trip Reset command: the tripped protection functions are reset only if their trip reset conditions are met.

Two parameters can be configured for each group of protection functions.

- The Auto-Reset Timer is a delay between the moment a protection function detects the presence of trip conditions (and triggers a trip), and the first auto-reset attempt. The actual reset can occur only after the delay elapses and the trip reset conditions are met. For instance, if the delay is set to 60 s and it takes 70 s for the system to meet the trip reset conditions, then the reset occurs after 70 s (that is, the shortest duration that satisfies both rules). If it only takes 50 s to meet the trip reset conditions, then the delay still applies and the reset occurs after 60 s.
- The Auto-Reset Retry Attempt Maximum specifies the number of reset attempts made if the previous ones are unsuccessful (for instance, if the external conditions causing the trip to occur still exist.). If the Auto-Reset Retry Attempt Maximum parameter is set to A, the reset attempts are repeated indefinitely until the reset is successful. Otherwise, only the specified number of resets is attempted.

These parameters apply to each protection function within the group. If multiple protection functions are tripped within a given group, then the delay, the criteria of the trip reset conditions, and the retry attempt maximum setting apply to all the tripped functions of that group. For example, if both the Stall and Long Start protection functions are tripped, the Auto-Reset triggers a trip reset only after the delay set for the Load Protection group elapses, and the trip reset conditions are met for both protection functions.

The Group Auto-Reset Retry counter increments for each retry attempt. It is reset to zero one minute after a successful trip reset (in the absence of further trips).

The following table describes Auto-Reset parameters.

Auto-reset parameters

Setting name		Description	Value range	Units	Default value	Increment
Load Protection	Auto-Reset Retry Attempt Maximum	Parameter to limit Auto-Reset operations	0–10 (A)	—	0	1
	Auto-Reset Timer	Timer to trigger Auto-Reset	0–65,535	s	60	1
Thermal Protection	Auto-Reset Retry Attempt Maximum	Parameter to limit Auto-Reset operations	0–10 (A)	—	A	1
	Auto-Reset Timer	Timer to trigger Auto-Reset	0–65,535	s	480	1
Electrical Protection	Auto-Reset Retry Attempt Maximum	Parameter to limit Auto-Reset operations	0–10 (A)	—	0	1
	Auto-Reset Timer	Timer to trigger Auto-Reset	0–65,535	s	1,200	1

Monitoring Data

What's in This Chapter

Upstream Voltage Presence 81
Current Monitoring 81
Energy Monitoring 81

Upstream Voltage Presence

The Upstream Voltage Presence function detects the presence of voltage in the upstream power connections of the devices. This information typically indicates the open/closed state of upstream protection devices (like circuit breakers).

Current Monitoring

The Current Monitoring function provides average and per-phase current information at the TeSys™ avatar level. It can also detect the maximum current seen since last reset, along with an associated timestamp. Average current is available in the Control function block for each avatar, with additional information in the Diagnostics function block.

Energy Monitoring

The Energy Monitoring functions provide several voltage, power, and energy measurements, both at the TeSys avatar level and for the full TeSys island.

These functions can be activated through the avatars Load Energy Monitoring setting, and require one voltage interface module to be installed in the island.

Energy is measured within a 10% accuracy for loads running under nominal conditions (50–125% FLA, power factor 0.7, 47–63 Hz).

NOTE: Active energy is measured, only when **Current Phase Sequence** is configured as **ABC**.

System Monitoring

The monitoring functions described in the following tables apply to the TeSys island as a whole.

Voltage Monitoring

- Phase RMS Voltage
- Average RMS Voltage
- Maximum RMS Voltage and Timestamp
- Voltage Fluctuation Status (Dip and Swell)
- Percentage of Unbalance Voltage
- Maximum Unbalance Voltage and Timestamp
- Voltage Frequency (Hz)
- Voltage Phase Sequence

Power Monitoring

- Instantaneous Total Active Power (kW)
- Maximum Total Active Power (kW) and Timestamp
- Instantaneous Total Reactive Power (kvar)
- Maximum Total Reactive Power (kvar) and Timestamp
- True Power Factor
- Minimum True Power Factor and Timestamp
- Maximum True Power Factor and Timestamp

Energy Monitoring

- Total Active Energy (kWh)
- Total Reactive Energy (kvarh)

Avatar Monitoring

The monitoring functions described in the following tables apply to the TeSys avatars individually.

Power Monitoring

- Instantaneous Total Active Power (kW)
- Maximum Total Active Power (kW) and Timestamp
- Instantaneous Total Reactive Power (kvar)
- Maximum Total Reactive Power (kvar) and Timestamp
- True Power Factor
- Minimum True Power Factor and Timestamp
- Maximum True Power Factor and Timestamp

Energy Monitoring

- Total Active Energy (kWh)
- Total Reactive Energy (kvarh)

Installation and Wiring

What’s in This Part

Installation 84
Wiring 117
Installation Setup 128

Installation

What's in This Chapter

Dimensions 84
Weights 91
General Installation Guidelines 91
Mounting Positions 95
Required Tools 98
Installing the Bus Coupler 100
Installing Standard Starters and SIL Starters 102
Mounting Power Interface Modules on DIN Rail 114
Mounting the I/O and Interface Modules on DIN Rail 115
Installation Verification 115
Connecting the Flat Cables 116

This section summarizes the installation steps described in this guide. Turn off power before performing Steps 1–4. Read and understand the information in Precautions, page 10 before performing any procedures in this guide.

1. **Receive and inspect the modules.**
   - Check that the catalog numbers printed on the labels are the same as those on the purchase order.
   - Remove the modules from the packaging and check that they have not been damaged in shipping.
2. **Verify the supply mains.**

   Verify that the supply mains is compatible with the power supply range of the TeSys island.
3. **Assemble the TeSys island.**
   - Assemble the TeSys island following the instructions in this guide.
   - Install any external options.
4. **Wire the TeSys island.**
   - Connect the motor, ensuring that its connections correspond to the voltage.
   - Make sure that the power is off, then connect the supply mains.
   - Connect the control wiring.
5. **Set up the TeSys island.**
6. **For operation, refer section OMT Operations, page 144.**

Dimensions

This section contains the dimensions of the TeSys™ island modules. Dimensions are provided in millimeters and inches.

Bus Coupler: TPRBCEIP and TPRBCPFN (mm/*in.*)

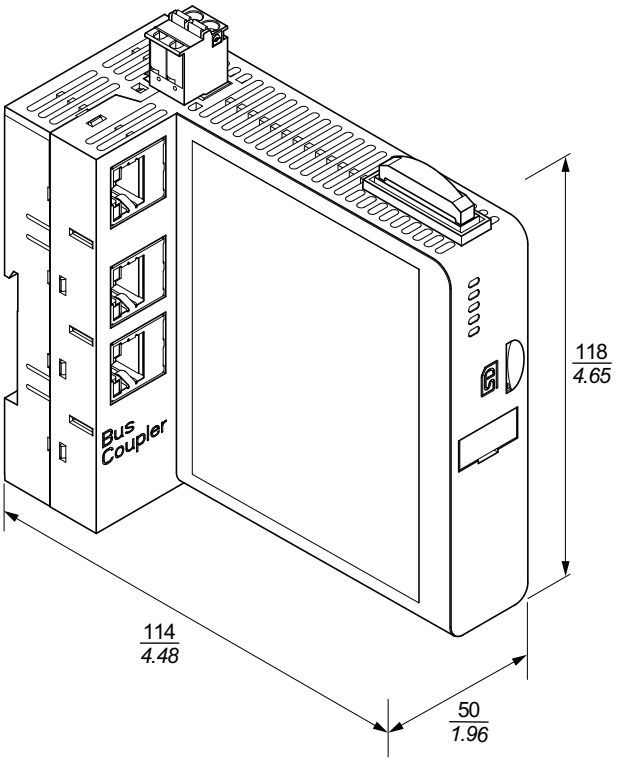

Bus Coupler: TPRBCPFB (mm/*in.*)

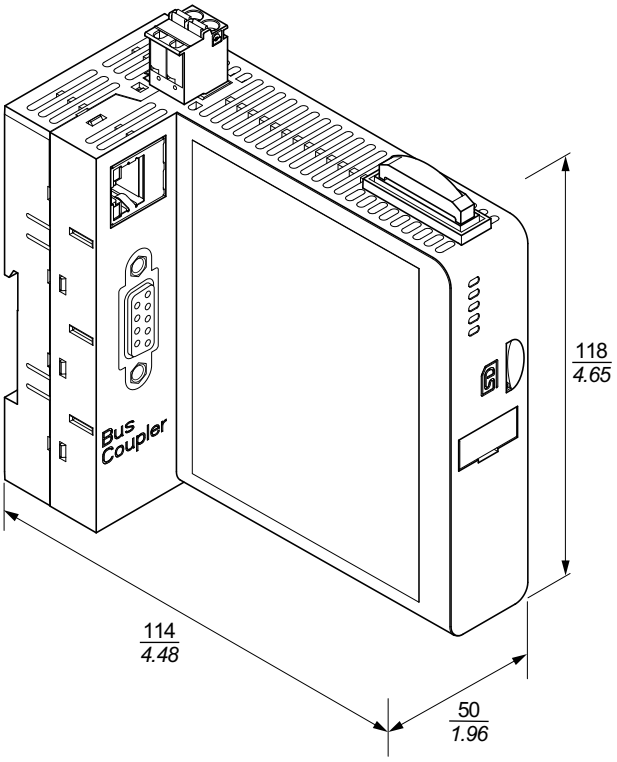

Voltage Interface Module: TPRVM001 (mm/*in.*)

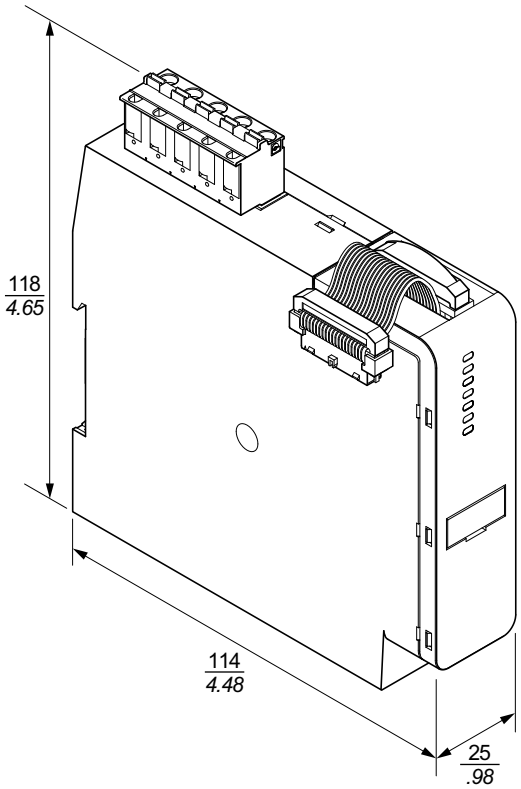

SIL(26) Interface Module: TPRSM001 (mm/*in.*)

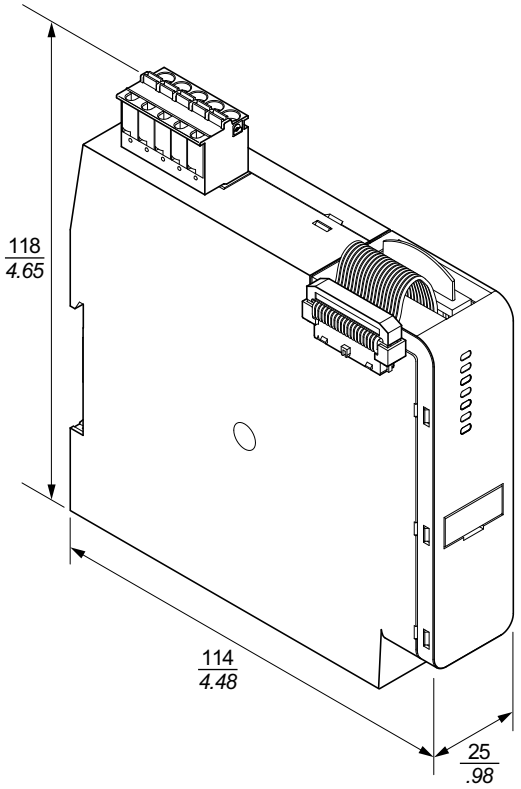

(26) Safety Integrity Level according to standard IEC 61508.

Digital I/O Module: TPRDG4X2 (mm/*in.*)

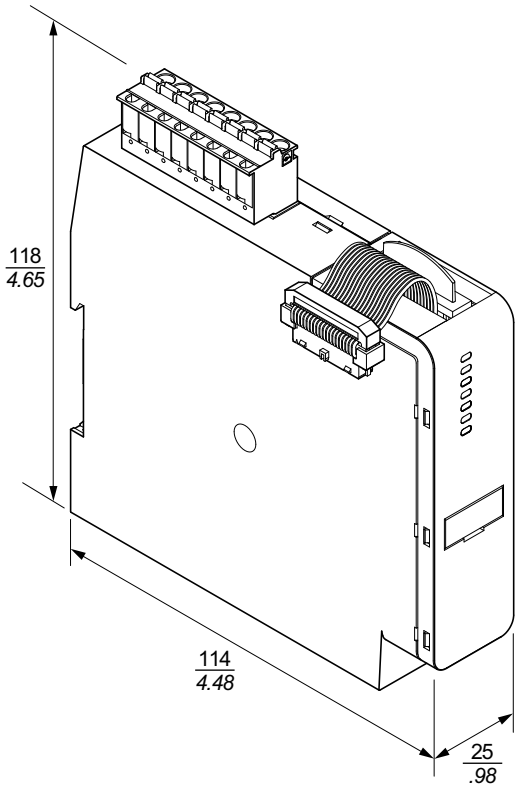

Analog I/O Module: TPRAN2X1 (mm/*in.*)

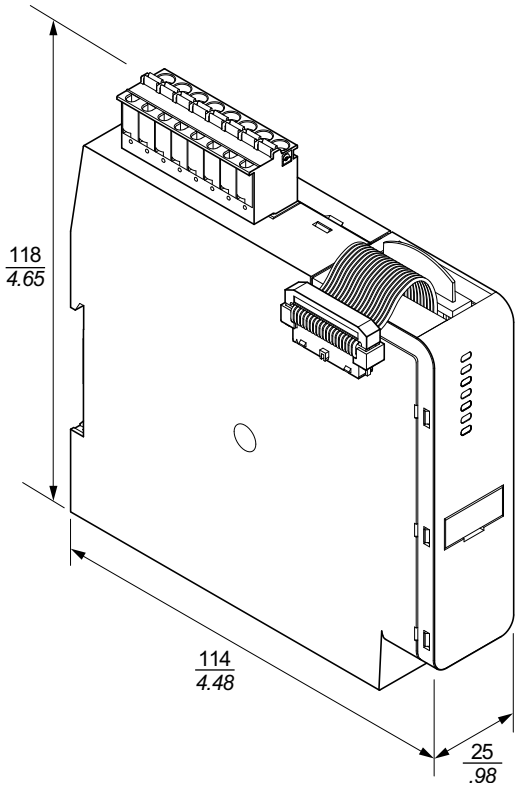

Size 1 (TPRPM009) and Size 2 (TPRPM038) Power Interface Modules (mm/*in.*)

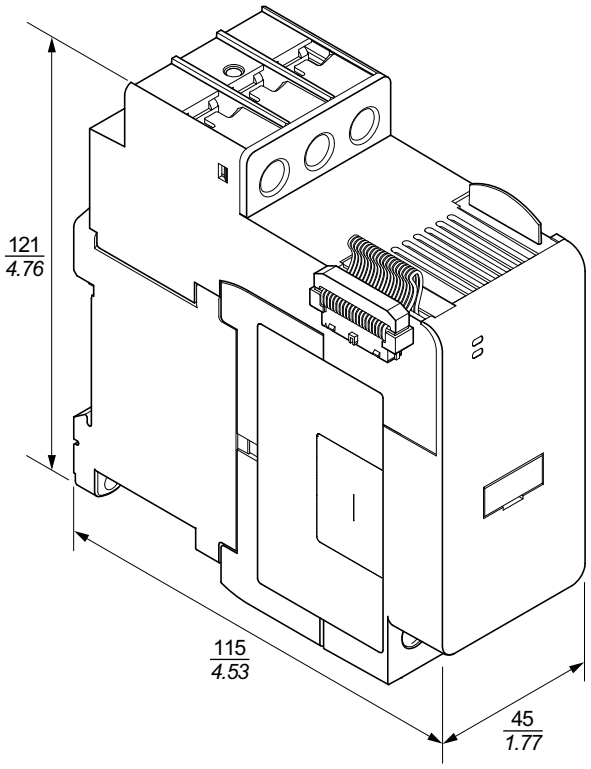

Size 3 Power Interface Module: TPRPM080 (mm/*in.*)

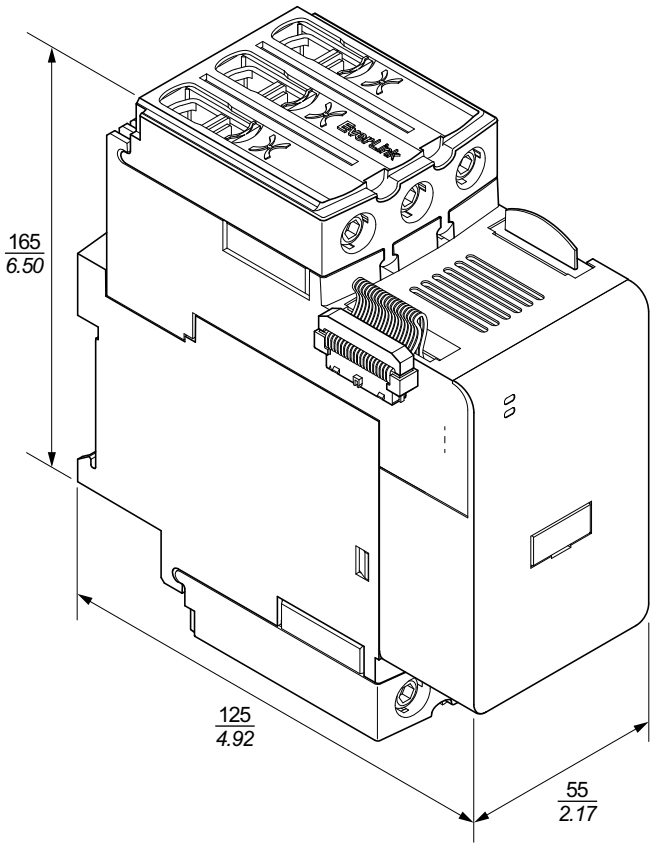

Size 1 Starters: TPRST009 and TPRSS009 (mm/*in.*)

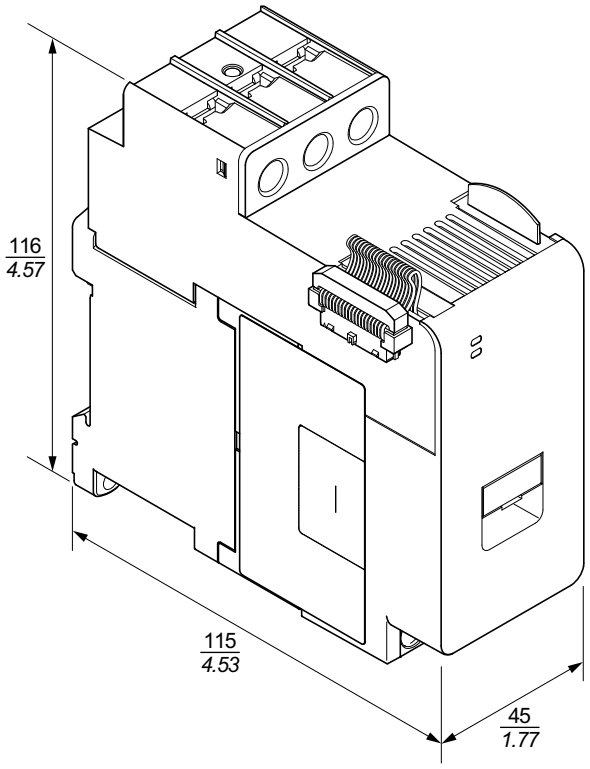

Size 2 Starters: TPRST025, TPRST038, TPRSS025, and TPRSS038 (mm/*in.*)

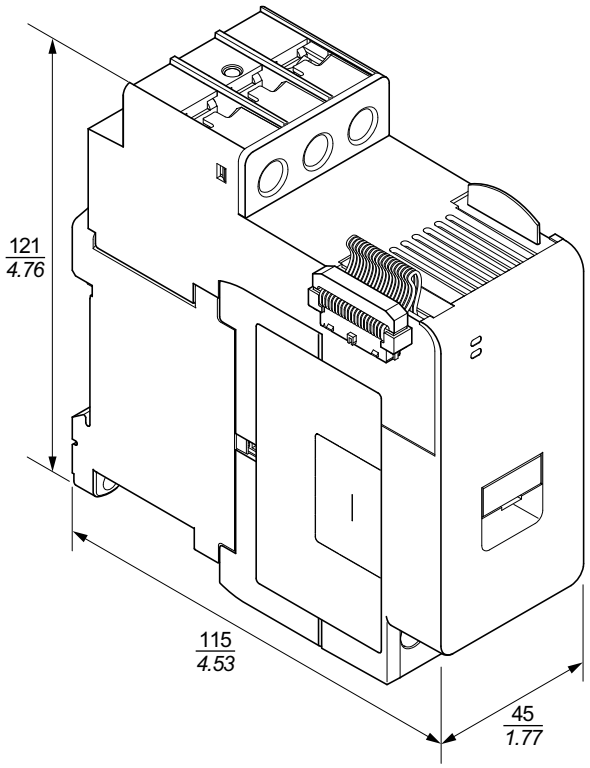

Size 3 Starters: TPRST065, TPRST080, TPRSS065, and TPRSS080 (mm/*in.*)

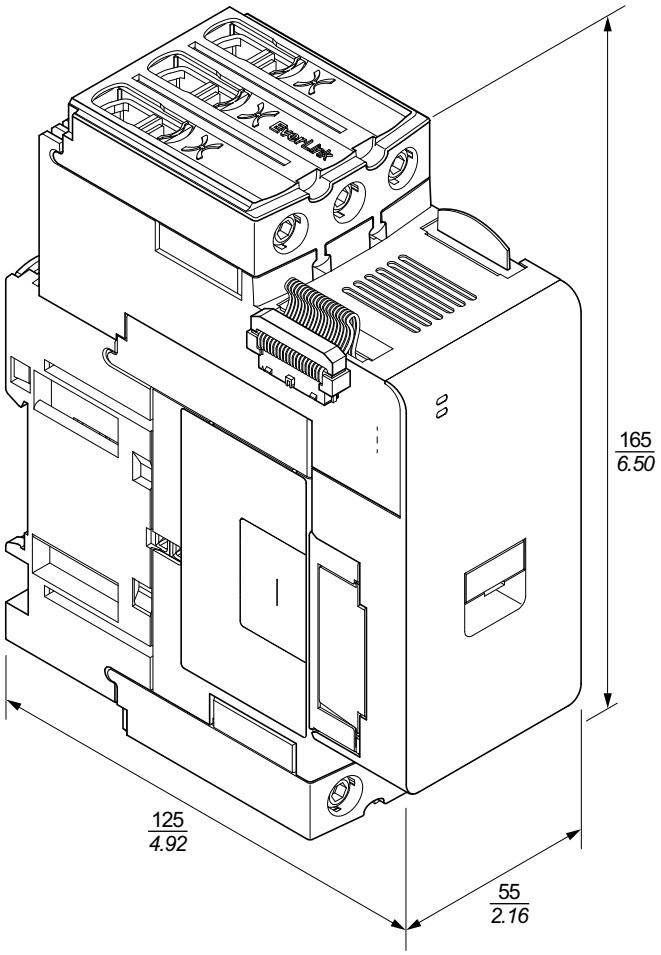

Weights

Weights

Module	Description/Rating	Reference number	Weight	
			kg	lb
Bus Coupler	Ethernet switch	TPRBCEIP	0.204	0.450
	PROFINET	TPRBCPFN	0.204	0.450
	PROFIBUS-DP	TPRBCPFB	0.204	0.450
Standard Starters	4 kW (5 hp)	TPRST009	0.656	1.446
	11 kW (15 hp)	TPRST025	0.718	1.583
	18.5 kW (20 hp)	TPRST038	0.718	1.583
	30 kW (40 hp)	TPRST065	1.248	2.751
	37 kW (40 hp)	TPRST080	1.248	2.751
SIL(27) Starters	4 kW (5 hp)	TPRSS009	0.656	1.446
	11 kW (15 hp)	TPRSS025	0.718	1.583
	18.5 kW (20 hp)	TPRSS038	0.718	1.583
	30 kW (40 hp)	TPRSS065	1.248	2.751
	37 kW (40 hp)	TPRSS080	1.248	2.751
Power Interface Modules	4 kW (5 hp)	TPRPM009	0.255	0.562
	18.5 kW (20 hp)	TPRPM038	0.255	0.562
	37 kW (40 hp)	TPRPM080	0.425	0.937
SIL Interface Module	SIL interface	TPRSM001	0.159	0.351
Digital I/O Module	4 In / 2 Out	TPRDG4X2	0.136	0.300
Analog I/O Module	2 In / 1 Out	TPRAN2X1	0.172	0.379
Voltage Interface Module	Voltage interface	TPRVM001	0.159	0.351

General Installation Guidelines

Use this section to plan your TeSys island system. It includes requirements for enclosing the island in protective housing and for selecting the power source.

NOTICE

EQUIPMENT DAMAGE

Do not swap or add modules while the power is on.

Failure to follow these instructions can result in equipment damage.

(27) Safety Integrity Level according to standard IEC 61508.

Enclosure Requirements

⚠⚠DANGER

HAZARD OF ELECTRIC SHOCK, EXPLOSION, OR ARC FLASH

- This equipment must only be installed and serviced by qualified electrical personnel.
- Turn off all power supplying this equipment before working on or inside this equipment.
- Use only the specified voltage when operating this equipment and any associated products.
- Always use a properly rated voltage sensing device to confirm power is off.
- Use appropriate interlocks where personnel and/or equipment hazards exist.
- Power line circuits must be wired and protected in compliance with local and national regulatory requirements.
- Apply appropriate personal protective equipment (PPE) and follow safe electrical work practices per NFPA 70E, NOM-029-STPS, or CSA Z462 or local equivalent.

Failure to follow these instructions will result in death or serious injury.

⚠WARNING

UNINTENDED EQUIPMENT OPERATION

- For complete instructions about functional safety, refer to the *TeSys island Functional Safety Guide*, 8536IB1904.
- Do not disassemble, repair, or modify this equipment. There are no user serviceable parts.
- Install and operate this equipment in an enclosure appropriately rated for its intended application environment.
- Each implementation of this equipment must be individually and thoroughly tested for proper operation before being placed into service.

Failure to follow these instructions can result in death, serious injury, or equipment damage.

TeSys island modules are designed as Zone B, Class A industrial equipment according to IEC/CISPR Publication 11. If they are used in environments other than those described in the standard, or in environments that do not meet the specifications in this guide, they may not meet electromagnetic compatibility requirements in the presence of conducted and/or radiated interference.

All TeSys island modules meet European Community (CE) requirements for open equipment as defined by EN61131-2, and as open equipment per the North American standards. You must install them in an enclosure designed to meet the specific environmental conditions of the installation and to minimize the possibility of personnel unintentionally contacting hazardous voltages. The enclosure should be constructed of metal to improve the electromagnetic immunity of the TeSys island and should have a keyed locking mechanism to minimize unauthorized access.

Thermal Considerations

The following tables list maximum thermal dissipation values for planning your TeSys island cooling system. The values assume maximum bus voltage, maximum field-side voltage, and maximum load currents. Typical values are often lower.

Maximum Thermal Dissipation Values: Starters and Power Interface Modules

Module Type	Reference Number	Maximum Thermal Dissipation @ AC3 (W)	Maximum Thermal Dissipation @ AC1 (W)
Standard Starters	TPRST009	3.5	5.1
	TPRST025	6.6	8.3
	TPRST038	11.8	12.8
	TPRST065	20.3	30.5
	TPRST080	30.5	30.5
SIL(28) Starters	TPRSS009	3.5	5.1
	TPRSS025	6.6	8.3
	TPRSS038	11.8	12.8
	TPRSS065	20.3	30.5
	TPRSS080	30.5	30.5
Power Interface Modules	TPRPM009	0.6	1.3
	TPRPM038	0.9	1.0
	TPRPM080	2.3	2.3

Maximum Thermal Dissipation Values: Bus Coupler, SIL Interface Module, Voltage Interface Module, I/O Modules

Module Type	Reference Number	Maximum Thermal Dissipation (W)
Bus Coupler	TPRBCEIP	5.00
	TPRBCPFN	5.00
	TPRBCPFB	5.00
SIL Interface Module	TPRSM001	1.25
Voltage Interface Module	TPRVM001	0.20
Digital I/O Module	TPRDG4X2	1.20
Analog I/O Module	TPRAN2X1	1.70

(28) Safety Integrity Level according to standard IEC 61508.

Environmental Characteristics

All TeSys island modules are electrically isolated between the internal electronic circuit and the input/output channels, within the limits described by the Environmental Characteristics table below. This equipment meets CE requirements as indicated in the table.

⚠WARNING

UNINTENDED EQUIPMENT OPERATION

Install and operate this equipment according to the conditions described in the Environmental Characteristics table.

Failure to follow these instructions can result in death, serious injury, or equipment damage.

Environmental Characteristics

Storage temperature	Starters: -25 °C to +70 °C (-13 °F to 158 °F) Bus Couplers, SIL(29) Modules, Voltage Interface Modules, and I/O Modules: -40 °C to +80 °C (-40 °F to 176 °F)
Operating temperature	-10 °C to +50 °C (14 °F to 122 °F) up to 60 °C (140 °F) with derating (horizontal and vertical mounting)
Humidity	5–95%, non-condensing
Altitude	Starters: up to 2000 m (6561.66 ft) Bus Couplers, SIL Modules, Voltage Interface Modules, and I/O Modules: up to 2000 m (6561.66 ft)
Corrosion immunity	Atmosphere free from corrosive gases
Protection degree	IP20 Helps protect against particulates larger than 12.5 mm (0.5 in.) diameter entering the device housing
EMC	Complying with US Code of Federal Regulations, Title 47, Part 15 (FCC Part 15) Class A for unintentional radio interference. Circuit complying with IEC 61000-6-7, Immunity requirements for equipment intended to perform functions in a safety-related system (functional safety) in industrial locations
Vibration	Horizontal and vertical mounting orientation: • 1.5 mm peak to peak, 3–13 Hz per IEC 60068-2-6 • 1 gn 13–200 Hz per IEC 60068-2-6
Mechanical shock resistance	15 gn at 11 ms in horizontal and vertical mounting orientations, according to IEC 60068–2–27
Force withstand	50 N for 30 s applied to the top of the device, perpendicular to the DIN rail
Degree of pollution	Pollution degree 2 per IEC/EN 61131–2
Environmental compliance and performance	REACh declaration—compliance with EU-REACh annex XVII RoHS compliance—compliant with European Directive (EU) 2015/863 and WEEE

(29) Safety Integrity Level according to standard IEC 61508.

Electromagnetic Compatibility

EMC Specifications

Phenomenon	Basic Standard	Product Compliance IEC/UL 60947 and 61010 series	Functional Safety Compliance IEC 61000–6–7 for Bus Coupler, SIL (30) Starter and SIL Interface Module
Electrostatic discharge	IEC/EN 61000-4-2	Air Discharge: 8 kV Contact discharge: 4 kV	Air Discharge: 8 kV Contact discharge: 6 kV
Radiated electromagnetic field	IEC/EN 61000-4-3	Field strength: 10 V/m Frequency: 80–1000 MHz Field strength: 3 V/m Frequency: 1.4–2.0 GHz Field strength: 1 V/m Frequency: 2.0–2.7 GHz	Field strength: 20 V/m Frequency: 80–1000 MHz Field strength: 10 V/m Frequency: 1.0–2.0 GHz Field strength: 3 V/m Frequency: 2.0–6.0 GHz
Fast transient burst	IEC/EN 61000-4-4	Starter, DIN Rail, and Bus Coupler Power Connector: 2 kV Digital and Analog Connector: 1 kV	Starter and DIN Rail: 4 kV Bus Coupler Power Connector, Ethernet Port, and SIM Connector: 2 kV
Surge immunity	IEC/EN 61000-4-5	Starter: 2 kV CM (12 Ω) and 1 kV DM (2 Ω) Bus Coupler Power Connector: 2 kV CM (42 Ω) and 1 kV DM (42 Ω) Ethernet Port and Analog Connector: 1 kV CM (2 Ω) Digital Connector: 1 kV CM (42 Ω) and 500 V DM (42 Ω)	Starter: 4 kV CM (12 Ω) and 2 kV DM (2 Ω) Bus Coupler Power Connector: 2 kV CM (42 Ω) and 2 kV DM (42 Ω) SIM Connector, Ethernet Port, and Analog Connector: 2 kV CM (42 Ω)
Conducted electromagnetic field	IEC/EN 61000-4-6	10 Vms (0.15—80 MHz)	20 Vms (0.15—80 MHz)
Magnetic field	IEC/EN 61000-4-8	30 A/m, 50/60 Hz	30 A/m, 50/60 Hz
Conducted emission	EN 55011	Class A / Environment A	
Radiated emission	EN 55011	Class A / Environment A	
NOTE: Communication and Analog input and output cables must be shielded.			

Mounting Positions

This section describes mounting positions and DIN rail requirements for TeSys island.

(30) Safety Integrity Level according to standard IEC 61508.

Electromagnetic Interference

The protection and energy monitoring features of TeSys island module are based on current sensors. To reduce the risk of electromagnetic interference between two adjacent devices, we recommend that you implement one of the following installation rules if the ratio between the FLA settings of two adjacent devices is >100:1.

- Option 1: Using the engineering tool, reorganize the order of the avatars on the TeSys island so there are no adjacent devices with FLA ratios >100:1
- Option 2: Leave a spacing of 30 mm (1.18 in.) between the two adjacent devices.

The figure below illustrates Option 2.

Avoiding Electromagnetic Interference: Option 2

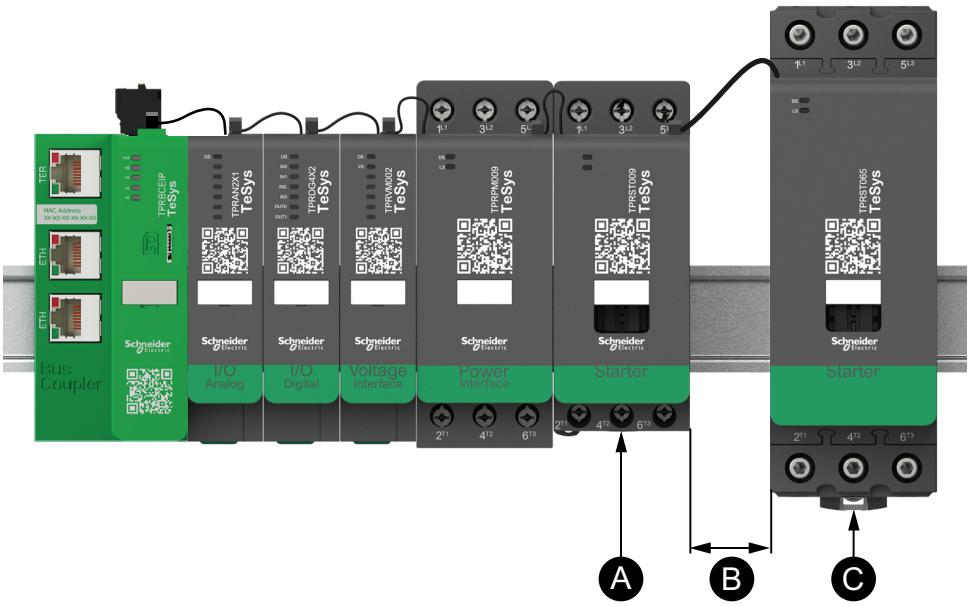

Legend

A	A TeSys island module with an FLA setting of 0.6 A
B	The recommended 30 mm (1.18 in.) spacing between the two adjacent devices with an FLA ratio >100:1
C	An adjacent TeSys island module with an FLA of 65 A (>0.6 A ×100)

Additionally:

1. Maintain a minimum distance of 30 cm (11.8 in.) between the TeSys island and sources of extremely high 50 or 60 Hz magnetic fields, such as three-phase bus systems.
2. TeSys island modules have integrated electrostatic discharge (ESD) protection. Discharge potential body charge to the equipment ground before handling or installing a module to reduce the risk of ESD damage.
3. Keep mobile communication devices at least 20 cm (7.87 in.) away from the TeSys island to reduce the likelihood of interference with the TeSys island.
4. Integrating radio communication devices in the same panel or in a near-by panel requires specific precautions related to transmit power and antenna location. Contact a Schneider Electric representative for more information.
5. TeSys island is a Class A device designed for use in environment A (according to *FCC Rules & Regulations*, Title 47, Part 15, Subpart B). Using TeSys island in environment B may cause radio interference necessitating additional mitigation methods.
6. For additional information on EMC installation practices, refer to Schneider Electric's *Electrical Installation Guide*, EIGED306001, or contact a Schneider Electric representative.

Heat Dissipation

To allow adequate heat dissipation, always leave a spacing of 10 cm (3.94 in.) between the short-circuit protection devices and the TeSys island starters.

Additional installation recommendations pertain under the following conditions:

- Three or more starters are mounted on the TeSys island side-by-side.
- The starters have ratings (Ie) greater than or equal to 25 A.
- The starters are used with a motor having a nominal current In > 85% x Ie.

Under these conditions, we recommend that you implement one of the following installation rules:

- Option 1: Using the engineering tool, reorganize the avatars on the TeSys island to avoid these conditions.
- Option 2: Use 50 cm (1.64 ft) cables to wire the short-circuit protection devices with the affected middle starters. In a group of three starters, which all meet the conditions itemized above, the extra length is only recommended for the starter in the middle. In a group of four starters, the extra length is only recommended for the two starters in the middle.

Island Orientation

TeSys island can be mounted horizontally without derating. TeSys island can also be mounted vertically with 20% derating. The maximum width of the TeSys island is 112.5 cm (3.83 ft), measured from the bottom left edge of the bus coupler to the right edge of the last module on the TeSys island. See the figures below.

- Horizontal mounting: The bus coupler (**A**) must be the left-most component on the TeSys island.
- Vertical mounting: The bus coupler (**A**) must be the bottom-most component on the TeSys island.

Bus Coupler in Horizontal Orientation

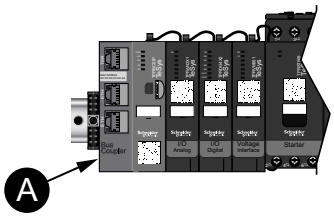

Bus Coupler in Vertical Orientation

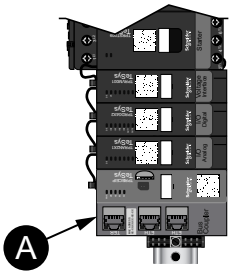

DIN Rail

The TeSys island modules are mountable on IEC 60715–compliant DIN rail (top hat style) with the following dimensions:

- Width: 35 mm (±0.3 mm)
- Thickness: 1 mm (±0.04 mm)
- Height: 7.5 or 15 mm (+0, −0.4 mm)

For Electromagnetic Compatibility (EMC) compliance, the galvanized steel DIN rail must be attached to a flat metal mounting surface, or mounted on an Electronic Industries Alliance (EIA) rack or in a metal cabinet enclosure. Do not use aluminum DIN rail. Aluminum forms an inherent non-conductive oxide on its surface that inhibits electrical connection.

A single piece of galvanized steel DIN rail is recommended. Use metallic screws approximately every 8 in. (20.32 cm) to attach the DIN rail to the metallic equipment structure or panel. Grounding is through the DIN rail connection.

Suitable DIN rail is available from Schneider Electric. See the following table.

DIN rail references

Rail depth	Reference number
15 mm (0.59 in.)	AM1DE200
7.5 mm (0.30 in.)	AM1DP200

Required Tools

The following table lists the tools required for installing the TeSys island.

Required tools

Tool	Size
Torque driver	6 mm flat head
Torque driver	#2 Phillips
Torque hex key	4 mm hexagonal

In addition, you need the following documentation:

- Bill of materials (BOM)
- Island topology: the order in which the TeSys island modules must be installed on the TeSys island

Verify that the modules you received match the BOM and the TeSys island topology before starting the installation. TeSys island modules must be installed in

a specific order on the island. If the physical arrangement of the modules on the TeSys island does not match the configured topology, the TeSys island will not function properly.

Installing the Bus Coupler

Mounting the Bus Coupler on DIN Rail

To install the bus coupler on the DIN rail, position the top groove of the bus coupler on the top edge of the DIN rail and press it against the rail until you hear the clip snap into place. See the figure below.

DIN Rail Installation (mm/*in.*)

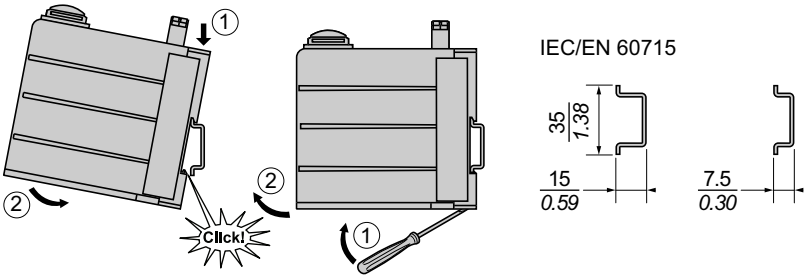

Micro SD Card

TeSys island bus couplers are designed with a card slot for a micro SD card. TeSys island maintains files on the micro SD card for the fast device replacement (FDR) function, as well as a software/firmware backup from the device and log files.

NOTE: Recommended micro SD card sizes for the TeSys island bus coupler are 4 GB, 8 GB, 16 GB, and 32 GB.

Handling the Micro SD Card

When handling the micro SD card, observe the following precautions to help prevent the corruption or loss of internal data, or the malfunction of a micro SD card.

NOTICE
LOSS OF APPLICATION DATA • Backup SD card data regularly. • Do not remove power, reset the controller, or remove the SD card while it is being accessed. • Orient the SD card correctly when inserting it into the controller. • Use only micro SD cards formatted using FAT32. **Failure to follow these instructions can result in equipment damage.**

When using TeSys island and a micro SD card, observe the following precautions to help avoid data loss.

- Accidental data loss can occur at any time. Once data is lost it cannot be recovered. Backup the SD card data regularly.
- If you forcibly extract the micro SD card, data on the micro SD card may become corrupt.
- Removing a micro SD card that is being accessed could damage the micro SD card, or corrupt its data.
- If the micro SD card is not positioned correctly when inserted into the controller, the data on the card and the bus coupler could become damaged.

- If you are updating the TeSys island firmware, be sure to update the SD card backup also.

Installing the Micro SD Card

To install the SD card:

1. Insert the SD card into the bus coupler's card slot.
2. Push until you hear it "click."

Installing the SD Card

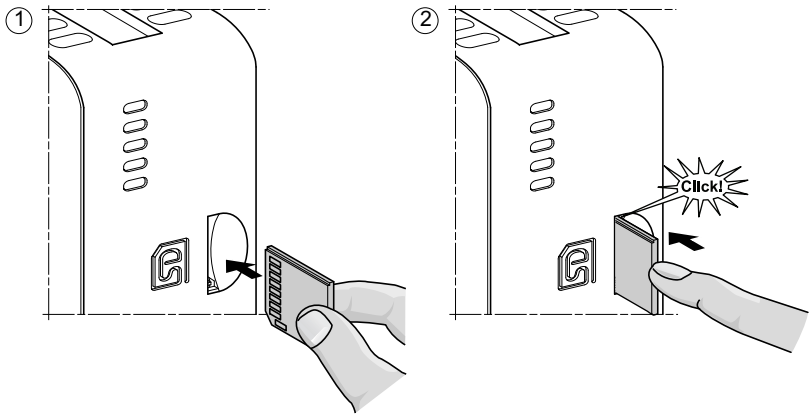

Installing Standard Starters and SIL Starters

NOTE: Safety Integrity Level according to standard IEC 61508.

This section contains instructions for joining adjacent starters with assembly accessories for use in two direction, two speed, and wye-delta (Y/D) Avatars. It also describes how to install the starters on DIN rail. Remove power before performing the steps in this section. Read and understand the information in Precautions, page 10 before performing any procedures in this guide.

Coupling Starters

This section describes how to join adjacent starters with accessories for use in two direction, two speed, and wye-delta Avatars. Refer to the bill of materials (BOM) and the TeSys island topology to determine which starters require installation of accessories. See also Avatar Composition, page 220. Join the starters with the accessories before mounting them on DIN rail.

The accessories come packaged as kits or can be ordered individually. The kits and their components are described in the following tables.

LAD9R1 Assembly Kit for 9–38 A (Size 1 and 2) Starters

Kit Components	Description	LAD9R1 Assembly Kit
LAD9V5	Parallel link between two starters	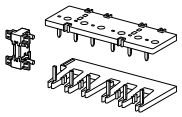 For installation instructions, refer to Installing the LAD9R1 Kit (9–38 A Starters), page 103.
LAD9V6	Reversing link between two starters	
LAD9V2	Mechanical interlock with assembly staple	

LAD9R3 Assembly Kit for 40–65 A (Size 3) Starters

Kit Components	Description	LAD9R3 Assembly Kit
LA9D65A6	Parallel link between two starters	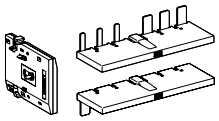 For installation instructions, refer to Installing the LAD9R3 Kit (40–65 A Starters), page 107.
LA9D65A69	Reversing link between two starters	
LAD4CM	Mechanical interlock	

Shorting Blocks for Y/D Avatars

Reference Number	Description	Shorting Blocks
LAD9P3	Shorting block / 3P parallel link for 9–38 A (size 1 and 2) starters. Used for linking 3 poles of a contactor in a wye-delta (Y/D) starter.	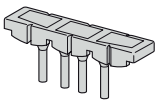 For installation instructions, refer to Installing the LAD9P3 Shorting Block (9–38 A Starters in Y/D Avatars), page 105.
LAD9SD3S	Shorting block / 3P parallel link for 40–65 A (size 3) starters and a separate warning label. Used for linking 3 poles of a contactor in a wye-delta (Y/D) starter.	 For installation instructions, refer to Installing the LAD9SD3S Shorting Block (40–65 A Starters in Y/D Avatars), page 110.

Installing the LAD9R1 Kit (9–38 A Starters)

The accessories in the LAD9R1 kit are used to join adjacent 9–38 A (size 1 and 2) starters in two speed or two direction avatars. To install the accessories, perform the steps in the following table and refer to Installing the LAD9R1 Assembly Kit, page 104 .

LAD9R1 Installation Procedure

Step	Action
1	On the starter that will be mounted on the left, insert a flat-head screwdriver into the slot cut into the label near the middle of the starter on the **right** side and remove the small plastic cover under the label. The section of the label that must be removed is perforated and will easily separate from the rest of the label. Do not remove the plastic cover on the **left** side of the starter.
	On the starter that will be mounted on the right, insert a flat-head screwdriver into the slot cut into the label near the middle of the starter on the **left** side, and remove the small plastic cover under the label. The section of the label that must be removed is perforated and will easily separate from the rest of the label. Do not remove the plastic cover on the **right** side of the starter.
2	Install the LAD9V2 mechanical interlock into the opening on the starter on the left. You will hear a click once the connection is made.
3	Attach the starter on the right to the mechanical interlock. You will hear a click once the connection is made.
4	Attach the assembly staple at the back of the starters. Insert the top of the staple onto the starters and then push down to secure the bottom of the staple into position.
5	Install the LAD9V5 parallel link at the top of the starters.
6	Install the LAD9V6 reversing link at the bottom of the starters.

To separate the starters and remove the accessories, perform the steps in the following table and refer to Installing the LAD9R1 Assembly Kit, page 104.

LAD9R1 Removal Procedure

Step	Action
1	If the flat cables have been connected, disconnect the cables from the modules before removing the accessories.
2	Completely loosen the screws on the starter terminals.
3	Remove the reversing link from the bottom of the starters.
4	Remove the parallel link from the top of the starters.
5	Remove the assembly staple from the back of the starters.
6	Use a flat-head screwdriver to separate the two starters.
7	Use a flat-head screwdriver to remove the mechanical interlock from the starters.

Installing the LAD9R1 Assembly Kit

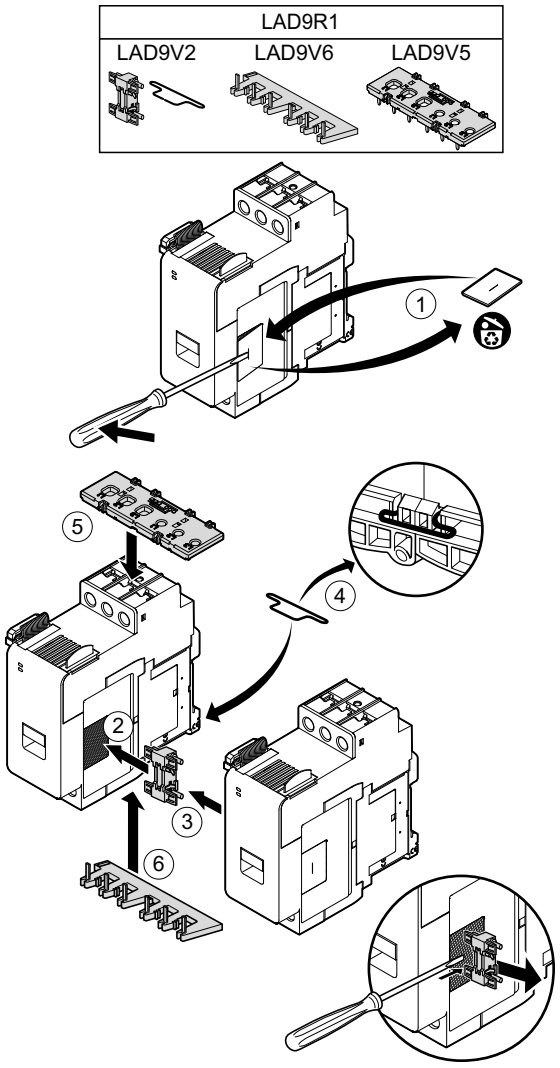

Installing the LAD9P3 Shorting Block (9–38 A Starters in Y/D Avatars)

The accessories in the LAD9R1 kit together with the LAD9P3 shorting block are used to join adjacent 9–38 A (size 1 and 2) starters for wye-delta (Y/D) Avatars. To install the accessories, perform the steps in the following table and refer to Installing the LAD9P3 Shorting Block, page 106.

LAD9P3 Installation Procedure

Step	Action
1	On the starter that will be mounted on the left, using a flat-head screwdriver, remove the small piece of plastic located near the middle of the starter on the **right** side. The plastic cover is hidden under a label on the side of the starter. Do not remove the plastic cover on the **left** side of the starter.
	On the starter that will be mounted on the right, using a flat-head screwdriver, remove the small piece of plastic located near the middle of the starter on the **left** side. The plastic cover is hidden under a label on the side of the starter. Do not remove the plastic cover on the **right** side of the starter.
2	Install the LAD9V2 mechanical interlock into the opening on the starter on the left. You will hear a click once the connection is made.
3	Attach the starter on the right to the mechanical interlock. You will hear a click once the connection is made.
4	Attach the assembly staple at the back of the starters. Insert the top of the staple onto the starters and then push down to secure the bottom of the staple into position.
5	Install the LAD9P3 shorting block at the top of the left starter. This is the wye (Y) starter.
6	Install the LAD9V6 reversing link at the bottom of the starters.

To separate the starters and remove the accessories, perform the steps in the following table and refer to Installing the LAD9P3 Shorting Block, page 106.

LAD9P3 Removal Procedure

Step	Action
1	If the flat cables have been connected, disconnect the cables from the modules before removing the accessories.
2	Completely loosen the screws on the starter terminals.
3	Remove the reversing link from the bottom of the starters.
4	Remove the shorting block from the top left starter.
5	Remove the assembly staple from the back of the starters.
6	Use a flat-head screwdriver to separate the two starters.
7	Use a flat-head screwdriver to remove the mechanical interlock from the starters.

Installing the LAD9P3 Shorting Block

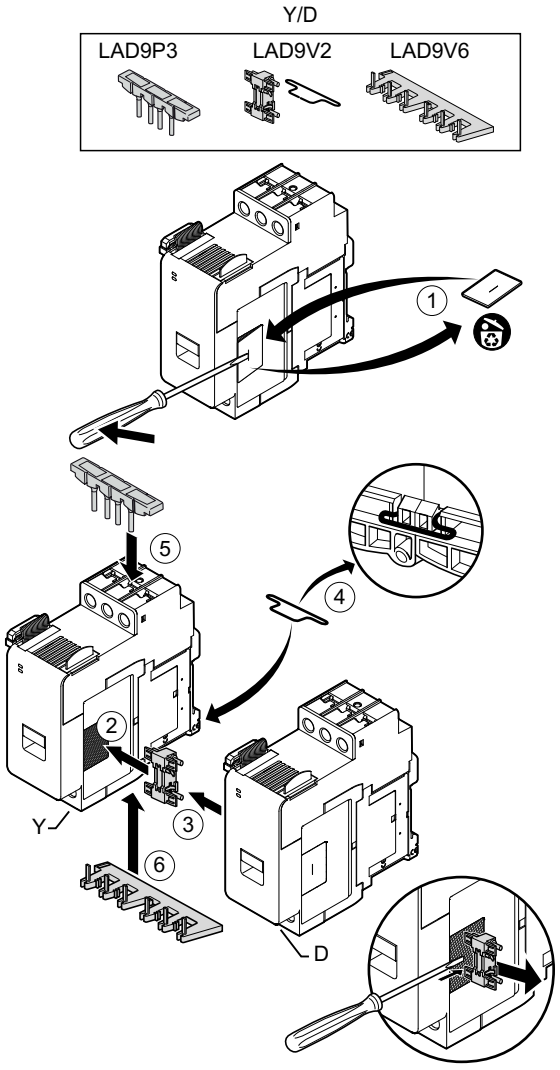

Installing the LAD9R3 Kit (40–65 A Starters)

The accessories in the LAD9R3 kit are used to join adjacent 40–65 A (size 3) starters in two speed or two direction Avatars. To install the accessories, perform the steps in the following table and refer to Installing the LAD9R3 Assembly Kit, page 108.

LAD9R3 Installation Procedure

Step	Action
1	Push the Everlink™ terminals toward you to remove them from the starter.
2	On the starter on the **left**, remove the small pieces of plastic located at the top and the bottom on the right side of the starter. Do not remove these pieces from the left side of the starter.
	On the starter on the **right**, remove the small pieces of plastic located at the top and the bottom on the left side of the starter. Do not remove these pieces from the right side of the starter.
3	Install the LAD4CM mechanical interlock onto the starter on the right. Make sure the blue clip goes into the side of the starter. The spring-loaded clip will attach it to the side of the starter. You will hear a click once the connection is made.
4	Attach the starter on the left to the mechanical interlock. You will hear a click once the connection is made.
5	Install the LA9D65A6 parallel link at the top of the starters.
	Install the LA9D65A69 reversing link at the bottom of the starters.
6	Slide the Everlink terminals on the bottom and top of the starters. Push the Everlink terminal towards the starter until you hear a click.

Installing the LAD9R3 Assembly Kit

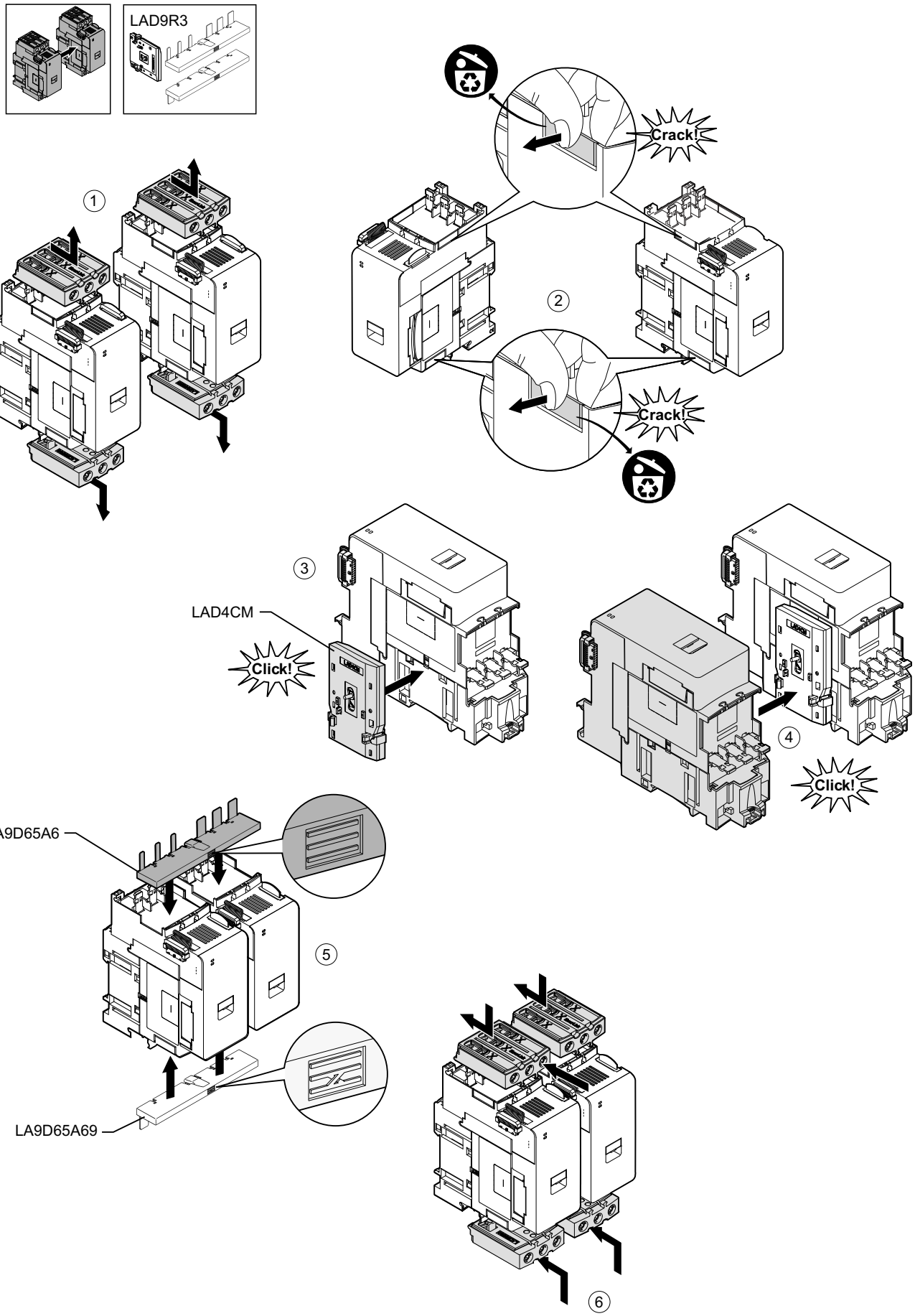

To separate the starters and remove the accessories, perform the steps in the following table and refer to Removing the LAD9R3 Assembly Kit, page 109.

NOTE: If the flat cables have been connected, disconnect the cables from the modules before performing the removal procedure.

LAD9R3 Removal Procedure

Step	Action
1	Completely loosen the screws on the Everlink terminals. Push the Everlink terminals toward you to remove them from the starter.
2	Remove the reversing link from the bottom of the starters.
3	Remove the parallel link from the top of the starters.
4	Use a flat-head screwdriver to lift the blue actuator on the top and bottom of the mechanical interlock installed between the two starters.
5	Remove the mechanical interlock.

Removing the LAD9R3 Assembly Kit

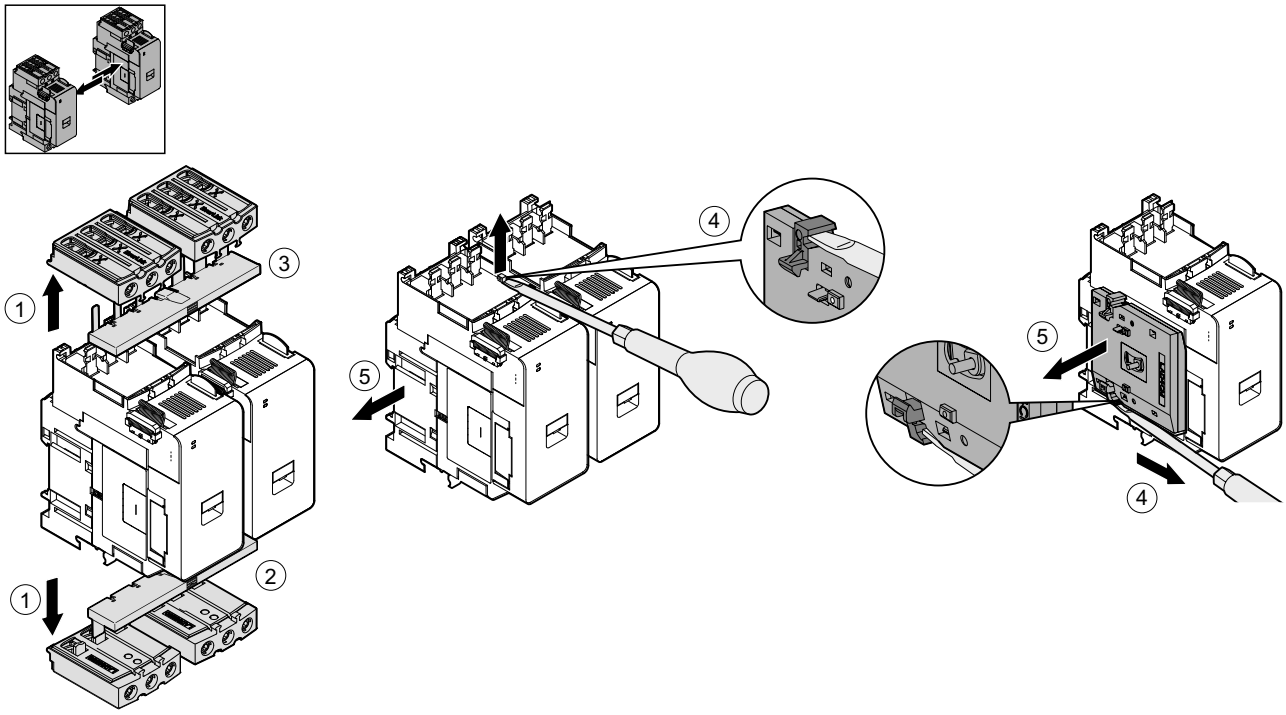

Installing the LAD9SD3S Shorting Block (40–65 A Starters in Y/D Avatars)

The accessories in the LAD9R3 kit together with the LAD9SD3S shorting block are used to join adjacent 40–65 A (size 3) starters for wye-delta (Y/D) avatars. To install the accessories, perform the steps in the following table and refer to Installing the LAD9SD3S Shorting Block, page 111.

LAD9SD3S Installation Procedure

Step	Action
1	Push the Everlink™ terminals toward you to remove them from the starter.
2	On the starter on the **left**, remove the small piece of plastic located at bottom on the right side of the starter. Do not remove this piece from the left side of the starter and do not remove the piece from the top.
	On the starter on the **right**, remove the small piece of plastic located at the bottom on the left side of the starter. Do not remove this piece from the right side of the starter and do not remove the piece from the top.
3	Install the LAD4CM mechanical interlock onto the starter on the right. Make sure the blue clip goes into the side of the starter. The spring-loaded clip will attach it to the side of the starter. You will hear a click once the connection is made.
4	Attach the starter on the left to the mechanical interlock. You will hear a click once the connection is made.
5	Install the LAD9SD3S shorting block at the top of the left starter. This is the wye (Y) starter.
6	Install the LA9D65A69 reversing link at the bottom of the starters.
7	Slide the Everlink terminals on the bottom and top of the starters. Push the Everlink terminal towards the starter until you hear a click.
8	Attach the warning label onto the Everlink terminal located at the top of the left starter that is covering the shorting block.

Installing the LAD9SD3S Shorting Block

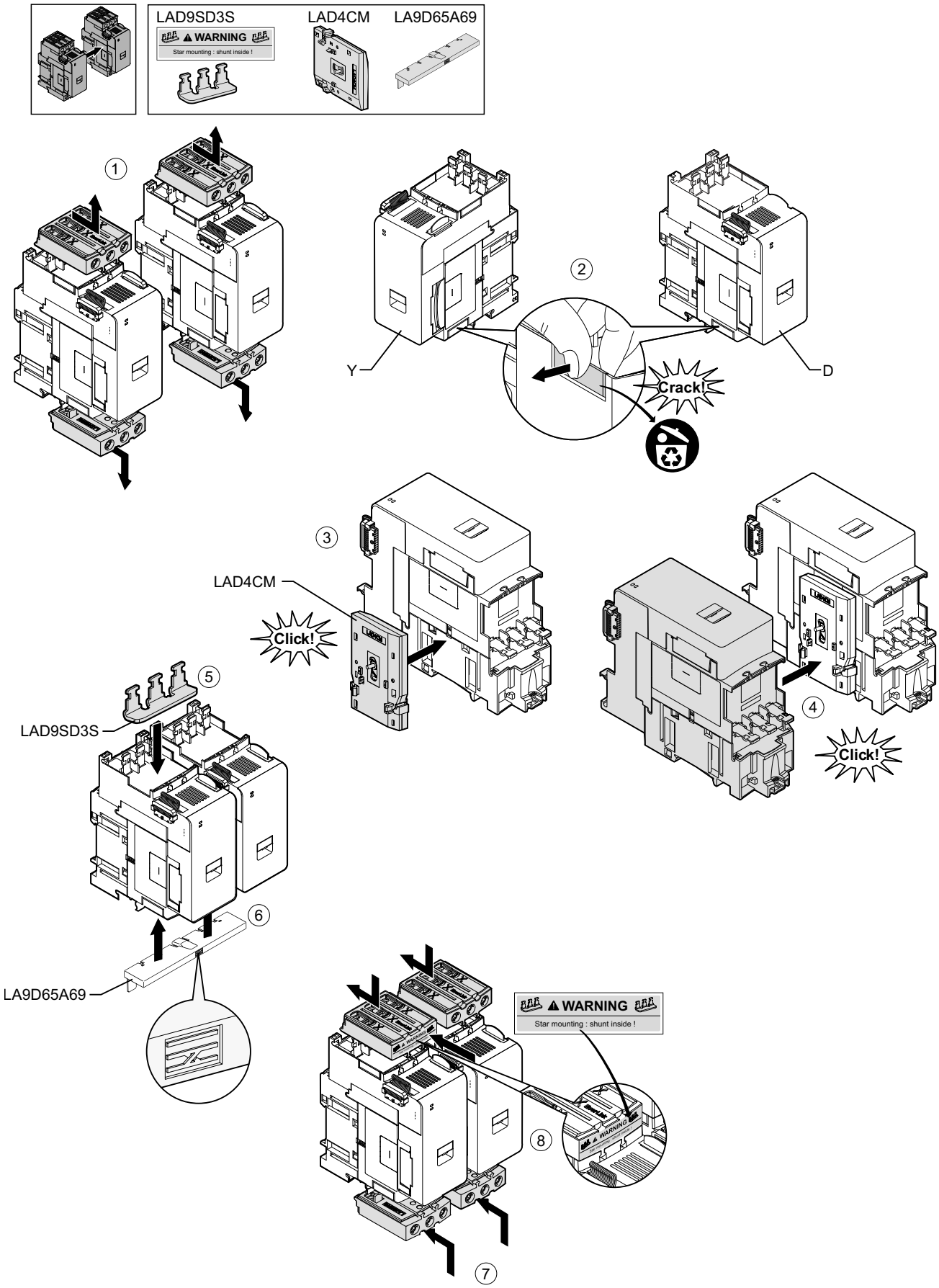

To separate the starters and remove the accessories, perform the steps in the following table and refer to Removing the LAD9SD3S Shorting Block, page 112.

NOTE: If the flat cables have been connected, disconnect the cables from the modules before performing the removal procedure.

LAD9SD3S Removal Procedure

Step	Action
1	Completely loosen the screws on the Everlink terminals. Push the Everlink terminals toward you to remove them from the starter.
2	Remove the reversing link from the bottom of the starters.
3	Remove the shorting block from the top of the starters.
4	Use a flat-head screwdriver to lift the blue actuator on the top and bottom of the mechanical interlock installed between the two starters.
5	Remove the mechanical interlock.

Removing the LAD9SD3S Shorting Block

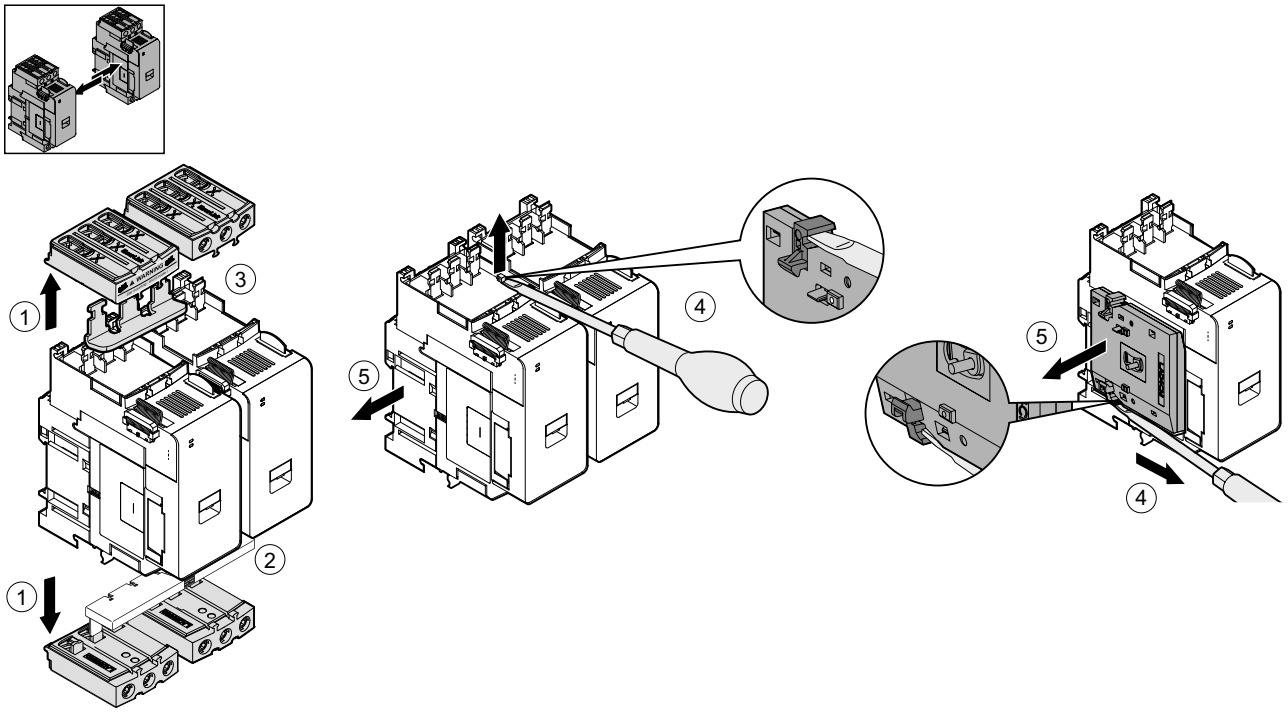

Mounting Starters on DIN Rail

Before installing modules on the TeSys island, refer to the TeSys island topology to ensure you are installing them in the correct sequence.

To install a starter on DIN rail, position the top groove of the starter on the top edge of the DIN rail and press it against the rail until you hear the clip snap into place. See the figures below.

Size 1 (TPR••009) and Size 2 (TPR••025 and TPR••038) Starters (mm/*in.*)

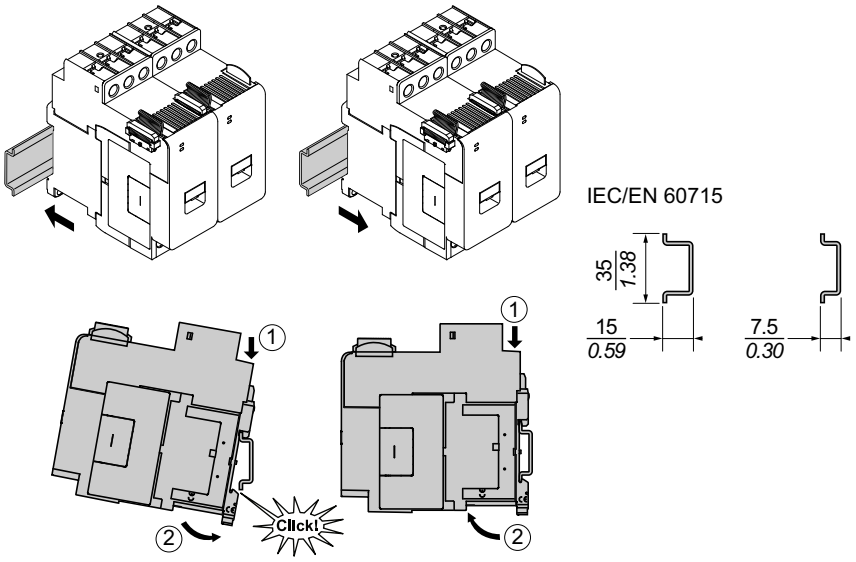

Size 3 Starters (TPR••065 and TPR••080) (mm/*in.*)

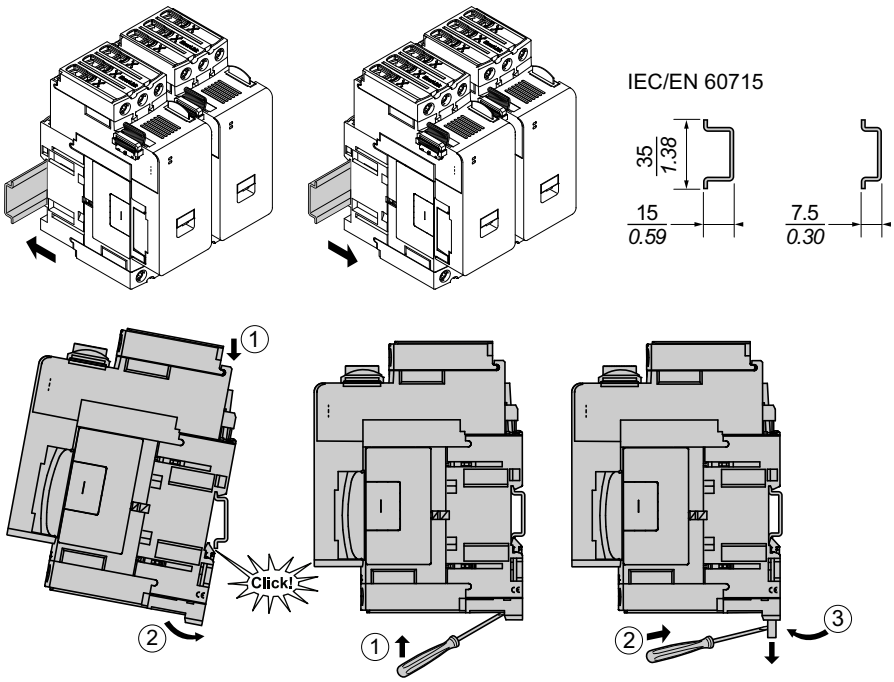

Mounting Power Interface Modules on DIN Rail

Before installing modules on the TeSys island, refer to the TeSys island topology to ensure you are installing them in the correct sequence.

To install a power interface module (PIM) on DIN rail, position the top groove of the PIM on the top edge of the DIN rail and press it against the rail until you hear the clip snap into place. See the figures below.

Size 1 (TPRPM009) and Size 2 (TPRPM038) Power Interface Modules (mm/*in.*)

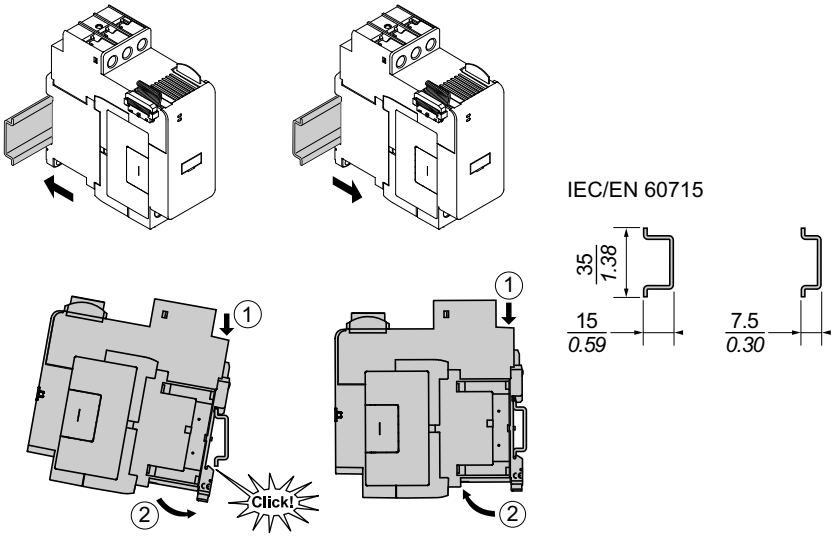

Size 3 Power Interface Module (TPRPM080) (mm/*in.*)

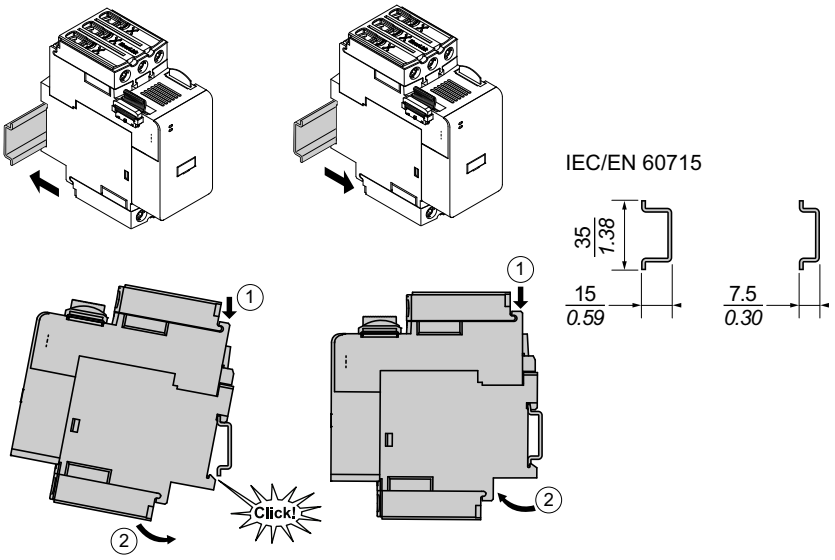

Mounting the I/O and Interface Modules on DIN Rail

This section covers installation of:

- Digital I/O Modules
- Analog I/O Modules
- SIL(31) Interface Modules (SIM)
- Voltage Interface Modules (VIM)

Before installing modules on the TeSys island, refer to the TeSys island topology to ensure you are installing them in the correct sequence.

To install a module on DIN rail, position the top groove of the module onto the top edge of the DIN rail and press it against the rail until you hear the clip snap into place. See the figure below.

I/O Modules (TPRDG4X2 and TPRAN2X1) and Interface Modules (TPRSM001 and TPRVM001) (mm/*in.*)

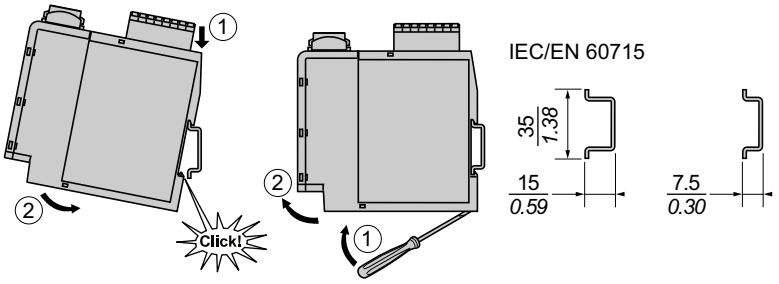

Installation Verification

Once you have mounted all TeSys island modules on the DIN rail, using the TeSys island topology, verify that each module is in the proper location and sequence on the TeSys island. If any modules are incorrectly positioned on the TeSys island, remove the modules from the DIN rail and install them in the proper location following the installation procedures.

Once you have verified that the modules are in the correct location, install a type ABB8P35 or equivalent terminal block end clamp (**A**)

- to the left of the bus coupler and to the right of the last module on the island if you are mounting the TeSys island horizontally, or
- below the bus coupler and above the last module on the TeSys island if you are mounting the TeSys island vertically.

End clamps help minimize movement and improve the shock and vibration characteristics of the TeSys island.

End Clamp in Horizontal Orientation

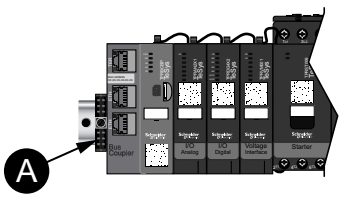

End Clamp in Vertical Orientation

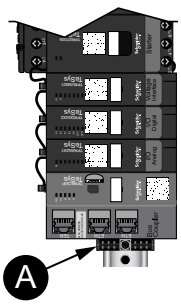

(31) Safety Integrity Level according to standard IEC 61508.

Connecting the Flat Cables

NOTICE
INOPERABLE EQUIPMENT Do not replace the modules in operational mode. **Failure to follow these instructions can result in equipment damage.**

This section describes how to connect the flat cables for all modules on the TeSys island.

TeSys island modules are connected together with flat cables. The cables are keyed such that they can only be installed one way. If the island is mounted horizontally, the flat cable at the top left corner of a module plugs into a connector located on the top right corner of the left-adjacent module. If the island is mounted vertically, modules connect top to bottom. All modules except the bus coupler include the flat cable connector.

To connect the flat cables, perform the following steps:

1. Remove the protective plug from the top right side of the bus coupler.
2. Securely connect to the bus coupler the flat cable from the module mounted directly to the right of the bus coupler.
3. Remove the protective plug from the top right of the module next to the bus coupler and connect the flat cable from the module directly to the right.
4. Connect all flat cables for each module included on the island. Do not remove the protective plug from the last module on the island.

Connecting the Flat Cables

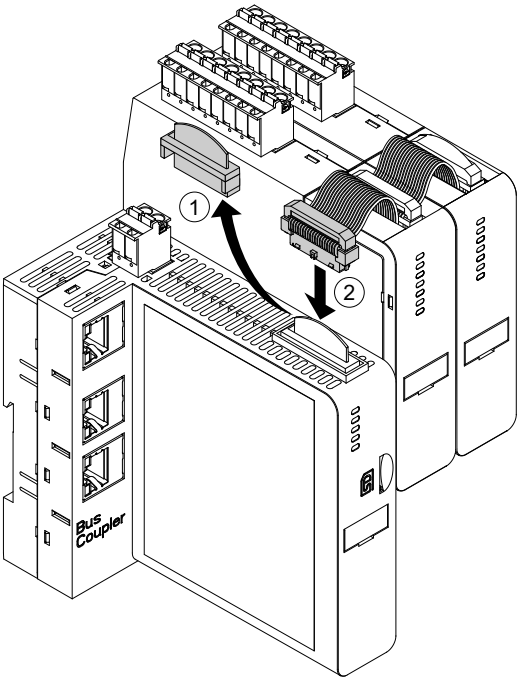

Wiring

What's in This Chapter

Wiring Precautions 117
Wiring Guidelines 118
Electrical Characteristics 119
Bus Coupler Wiring 120
Power Module Wiring 121
I/O Module Wiring 123
Avatar I/O Port Assignments 124
Voltage Interface Module Wiring 125
SIL Interface Module Wiring 126
Accessories Cabling 127

This section contains guidelines and best practices for wiring TeSys island.

Wiring Precautions

Read and understand the following precautions before performing any procedures in this guide.

⚠⚠DANGER

HAZARD OF ELECTRIC SHOCK, EXPLOSION, OR ARC FLASH

- This equipment must only be installed and serviced by qualified electrical personnel.
- Turn off all power supplying this equipment before working on or inside this equipment.
- Use only the specified voltage when operating this equipment and any associated products.
- Always use a properly rated voltage sensing device to confirm power is off.
- Use appropriate interlocks where personnel and/or equipment hazards exist.
- Power line circuits must be wired and protected in compliance with local and national regulatory requirements.
- Apply appropriate personal protective equipment (PPE) and follow safe electrical work practices per local and national regulatory requirements.

Failure to follow these instructions will result in death or serious injury.

⚠WARNING

FIRE

- Use only the specified wiring gauge range with the equipment and comply with the specified wire termination requirements.
- Tighten the power line connections to the specified torque values.

Failure to follow these instructions can result in death, serious injury, or equipment damage.

⚠WARNING

UNINTENDED EQUIPMENT OPERATION

- Use shielded cable for all communication wiring and when specified.
- Always route communication wiring and power wiring separately.

Failure to follow these instructions can result in death, serious injury, or equipment damage.

NOTICE
INOPERABLE EQUIPMENT Do not replace the modules in operational mode. **Failure to follow these instructions can result in equipment damage.**

Wiring Guidelines

Use shielded, properly grounded cables for all communication connections. If you do not use shielded cable for these connections, electromagnetic interference can cause signal degradation. Degraded signals can cause the bus coupler or attached modules and equipment to perform in an unintended manner.

Install cable ducts in the enclosure to manage the power and control wiring. In addition, observe the following rules when wiring the TeSys island:

- Verify that the operating conditions and environment are within the specified values.
- Use proper wire sizes to meet voltage and current requirements.
- Use copper conductors only.
- Use twisted pair, shielded cables for networks and the fieldbus.
- Separate the communication wiring from the power wiring. Route the communication wiring and power wiring in separate conduit.
- Keep a minimum distance of 30 cm (11.8 in.) between the communication cable and the power and/or control cables.
- Whenever power and communication wiring cross, the cables must cross at right angles.
- Do not over-bend the cables. The standard minimum bending radius is 10 times the cable diameter.
- Avoid routing cable against surfaces with sharp angles.
- Use only shielded I/O cabling for the Analog I/O module. Twisted-pair inner conductors are recommended to help reduce stray field coupling. Attach the cable shield foil to the TeSys island DIN rail or panel. Do not make the shield connection by using just the shield drain wire. Use a shield clamp to provide a circumferential shield connection. Spring-loaded shield clamps, like Phoenix Contact 3062799, provide a convenient means to make the shield connection to the DIN Rail.

Electrical Characteristics

Bus Couplers

Power supply voltage	Rated power supply voltage: 24 Vdc Operating range: 20.7...28.8 Vdc
Impulse withstand voltage (UI)	0.5 kV; SELV circuit for communication

Starters and SIL(32) Starters

Nominal voltage	100–690(33) Vac (RMS), phase to ground (-15% / +20%)
Impulse withstand voltage (UI)	6 kV

Power Interface Modules

Nominal voltage	100...690 Vac (RMS), phase to ground (-15%/+20%)
Impulse withstand voltage (UI)	6 kV; SELV circuit for communication

Voltage Interface Modules

Nominal voltage	100...690 Vac (RMS), phase to ground (-15%/+20%)
Impulse withstand voltage (UI)	6 kV; SELV circuit for communication

SIL Interface Modules

Impulse withstand voltage (UI)	2 kV; SELV circuit for communication **NOTE:** The contact is rated for 8 A, AC.

Digital I/O Modules

Voltage drop	0.4 V max
Turn on and turn off time	10 ms, maximum
Max leakage current	0.1 mA
Radio interference	FCC Part 15, Class A
Impulse withstand voltage levels	0.5 kV; SELV circuit for communication

Analog I/O Modules

Radio interference	FCC Part 15, Class A
Impulse withstand voltage levels	0.5 kV; SELV circuit for communication

(32) Safety Integrity Level according to standard IEC 61508.
(33) Maximum 300 V rated operational voltage to earth (Ground) per table H.1 of IEC 60947-1 (including 400/230 and 480/277 power systems) for TPRST025, TPRSS025, TPRST038, TPRSS038 unless used with appropriate surge protective device limiting the system to OVC II.

Bus Coupler Wiring

Control power to TeSys island is connected through a single removable 2-pin spring terminal connector on the top of the bus coupler. The connector is for 24 V and 0 V connections. To wire the bus coupler:

1. Remove the spring terminal connector from the top of the bus coupler.
2. Referring to the table and figures below, make the power connections.
3. Insert the spring terminal connector back into the top of the bus coupler.
4. Connect the fieldbus cable(s) to the bus coupler. Connect the fieldbus Ethernet cables to the dual port Ethernet switch on the TPRBCEIP and TPRBCPFN bus couplers. Connect the PROFIBUS-DP cable to the DB-9 port on the TPRBCPFB bus coupler.
5. An RJ45 cable can be connected to the service port on the TPRBCEIP and TPRBCPFB bus couplers for communication with the digital tools.

   The service port on the TPRBCPFN bus coupler is intended for temporary use only during commissioning and troubleshooting.

Bus Coupler Spring Terminal Connector

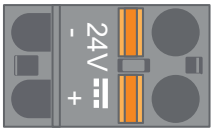

Bus Coupler Cabling

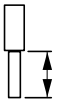			
10 mm	0.2–2.5 mm²	0.2–2.5 mm²	0.25–2.5 mm²
0.40 in.	AWG 24–14	AWG 24–14	AWG 22–14

The pitch between the pins is 5.08 mm.

Bus Coupler Wiring

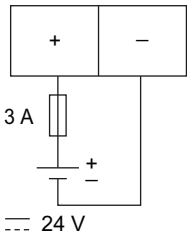

Fuse: 3 A Type T

1. The 24 Vdc power supply of the bus coupler must have an SELV rating. Install the power supply in the same panel or cabinet as the TeSys island.
2. One power supply (24 V, 3 A) should be used for only for oneTeSys island.

Power Module Wiring

Power modules include:

- Standard Starters
- SIL(34) Starters
- Power Interface Modules

The following diagrams illustrate typical power module wiring for single-phase and three-phase motors.

Single-Phase Motors

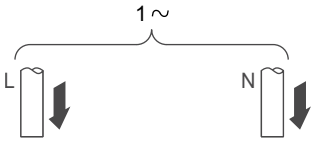

Three-Phase Motors

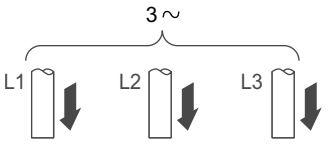

To make the power connections, you will need:

- A #2 Phillips-head torque driver and a 6 mm flat-head torque driver for size 1 and 2 power modules (see the table below)
- A 4 mm hexagonal torque key for size 3 power modules

Using the TeSys island topology and bill of materials, determine which modules make up the hardware composition for the TeSys Avatar. Use the following wiring guidelines and reference the avatar wiring diagrams to complete the wiring for the power modules.

1. Make the upstream power connections to the short-circuit protection devices.
2. Complete any wiring required between the starters for the avatar.
3. Make the downstream power connections to the load.

Power devices accept the cable ranges shown in the table below.

Wiring—Power Devices

			Size 1 Starter, mm² (AWG)	**Size 2 Starter, mm² (AWG)**	**Size 1 or 2 Power Interface Module, mm² (AWG)**	**Size 3 Starter plus Power Interface Module, mm² (AWG)**
			TPRST009 TPRSS009	**TPRST025, 038 TPRSS025, 038**	**TPRPM009, 038**	**TPRST065, 080 TPRSS065, 080 TPRPM080**
Solid cable without cable end	1 conductor		1–4 (16–12)	1.5–10 (16–8)	1.5–10 (16–8)	1–35 (16–2)
	2 conductors		1–4 (16–12)	2.5–10 (14–8)	2.5–10 (14–8)	1–25 (16–4)
Flexible cable without cable end	1 conductor		1.5–4 (16–12)	2.5–10 (14–8)	1.5–10 (16–8)	1–35 (16–2)
	2 conductors		1.5–4 (16–12)	2.5–10 (14–8)	1.5–10 (16–8)	1–25 (16–4)

(34) Safety Integrity Level according to standard IEC 61508.

Wiring—Power Devices (Continued)

			Size 1 Starter, mm² (AWG)	Size 2 Starter, mm² (AWG)	Size 1 or 2 Power Interface Module, mm² (AWG)	Size 3 Starter plus Power Interface Module, mm² (AWG)
			TPRST009 TPRSS009	**TPRST025, 038 TPRSS025, 038**	**TPRPM009, 038**	**TPRST065, 080 TPRSS065, 080 TPRPM080**
Stranded cable with cable end	1 conductor		1–4 (16–12)	1–6 (16–10)	1–6 (16–10)	1–35 (16–2)
	2 conductors		1–2.5 (16–14)	1.5–6 (16–10)	1–6 (16–10)	1–25 (16–4)
Strip length, mm (in.)			8 (0.32)	10 (0.4)	10 (0.4)	16 (0.83)
Torque, N•m (lb-in)			1.7 N•m (15 lb-in)	2.5 N•m (22 lb-in)	2.5 N•m (22 lb-in)	35 mm² (2 AWG): 8 N•m (70 lb-in) 1–25 mm² (16–4 AWG): 5 N•m (44 lb-in)

I/O Module Wiring

Use the following guidelines and refer to the TeSys Avatar wiring diagrams to wire the I/O modules.

1. Remove the spring terminal connector. It is positioned on the top of the module, behind the flat cable connection.
2. Refer to the table and figures below and make the power and control connections. See Accessories Cabling, page 127 for cable types and sizes.
3. Insert the spring terminal connector back into the top of the module.

Digital I/O Module Terminals

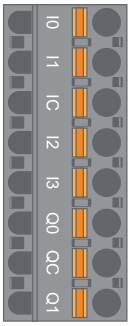

Analog I/O Module Terminals

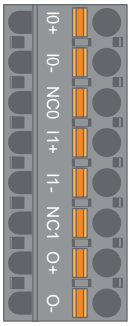

Pin	Digital I/O Module	Terminal Identification	Analog I/O Module	Terminal Identification
1 (closest to DIN rail)	Input 0	**I0**	Input 0 +	**I0+**
2	Input 1	**I1**	Input 0 –	**I0–**
3	Input Common	**IC**	NC 0	**NC0**
4	Input 2	**I2**	Input 1+	**I1+**
5	Input 3	**I3**	Input 1 –	**I1–**
6	Output 0	**Q0**	NC 1	**NC1**
7	Output Common	**QC**	Output +	**O+**
8 (closest to front face)	Output 1	**Q1**	Output –	**O–**

Digital I/O Module Specifications

Digital I/O Module Input Specifications

Channel	Inputs
Rated power supply	24 Vdc
Input type	Type 1 (IEC/EN/UL/CSA 61131-2)
Rated input voltage	24 Vdc
Cable length, maximum	30 m (98 ft)

Digital I/O Module Output Specifications

Channel	Inputs
Rated output voltage	24 Vdc
Rated output current	0.5 A, resistive
Cable length, maximum	30 m (98 ft)

Analog I/O Module Specifications

Input / Output Specifications

Channel	Inputs	Output
Rated power supply	24 Vdc	
Resolution, maximum	16 bits, or 15 bits + sign	12 bits (4096 points)
Cable length, maximum	30 m (98 ft) shielded cable	

Signal Type: Inputs

Channel	Inputs			
Signal type	**Voltage**	**Current**	**Thermocouple**	**3–wire RTD**
Range	0–10 Vdc −10 to +10 Vdc	0–20 mA 4–20 mA	Type K, J, R, S, B, E, T, N, C	PT100, PT1000, NI100, NI1000

Signal Type: Output

Channel	Output	
Signal type	**Voltage**	**Current**
Range	0–10 Vdc −10 to +10 Vdc	0–20 mA 4–20 mA

Avatar I/O Port Assignments

Application and certain load avatars introduce process variable (PV) inputs and PV switches.

PV inputs are connected to Analog I/O modules (AIOM) that are included as part of the application avatar. Each AIOM module allows up to two PV inputs. A maximum of five PV inputs, requiring up to three AIOM modules, can be selected for the avatar.

PV switches are connected to Digital I/O modules (DIOM) that are included as part of the application avatar. Each DIOM module allows up to four PV switches or control mode digital inputs. A maximum of five PV switches and three control modes, requiring up to two DIOM modules, can be selected for the avatar.

The PV input and PV switch port assignments on the DIOM and AIOM modules are made during the initial configuration of the TeSys island settings using the TeSys island DTM.

The I/O port assignments can be found in the DTM once the avatars on the TeSys island have been selected and the number of PV Inputs and PV Switches have been assigned. The I/O port assignments can be found in the Settings section for the System avatar. The inputs for the avatars are assigned to specific I/O devices and then mapped to ports on that I/O device.

Voltage Interface Module Wiring

Use the following guidelines and refer to the TeSys avatar wiring diagrams to wire the voltage interface module (VIM).

The voltage interface module has one connection point through a single, removable spring terminal connector for the mains voltage measurement input. The connector is positioned on the top of the module.

VIM spring terminal connector

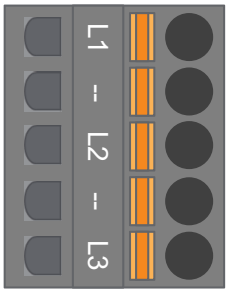

VIM wiring for Three–phase applications

3-Phase, 5-Pin connector pin number	Terminal identification	Signal
1	L1	Phase 1 Voltage
3	L2	Phase 2 Voltage
5	L3	Phase 3 Voltage

VIM wiring for Single-phase applications

1-Phase, 5-Pin connector pin number	Terminal identification	Signal
1	L1	Line or Neutral
3	L2	—
5	L3	Neutral or Line

1. Remove the spring terminal connector. It is positioned on the top of the module, behind the flat cable connection.
2. Refer to the table above and make the power connections to the VIM connector. See Accessories Cabling, page 127 for cable types and sizes.
3. Insert the spring terminal connector back into the top of the VIM.

   NOTE: Voltage frequency detection is on L1. When wiring a line-neutral single-phase system, if the neutral is grounded, ensure that the line is in L1 and the neutral is in L3. Otherwise the frequency reported may be zero.

SIL Interface Module Wiring

Using the TeSys island topology and bill of materials, determine the location of the SIL(35) interface modules (SIMs) on the TeSys island. The SIM is supplied 24 V power and also connects to an external SIL rated device using a spring terminal connector provided with the SIM. Use the following guidelines to complete the 24 V power wiring between the SIL interface modules and the external SIL rated device.

SIM Terminal Block

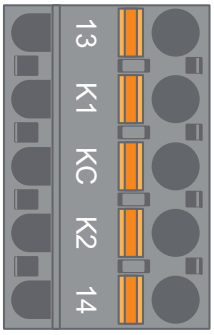

SIM Terminal Block Pinout

Pin Number	Terminal Identification	Signal
1	13	MIRROR IN
2	K1	SIL-IN 1
3	KC	SIL COMMON
4	K2	SIL-IN 2
5	14	MIRROR OUT

NOTE: There may be multiple SIMs on the TeSys island. Ensure that you connect the correct set of wires from the external SIL rated device to the correct SIM module. See the *Functional Safety Guide*, 8536IB1904, for more information.

1. Remove the spring terminal connector. It is positioned on the top of the module, behind the flat cable connection.
2. Using the SIM wiring table, connect 24 V to both K1 and K2 on the removable spring terminal connector, regardless of the control architecture. In wiring category 1 and 2 applications, terminals K1 and K2 must be shorted together. See Accessories Cabling, page 127 for cable types and sizes.
3. Insert the spring terminal connector back into the top of the SIM.

(35) Safety Integrity Level according to standard IEC 61508.

Accessories Cabling

Cabling for SIM, VIM, DIOM, and AIOM

TPRSM001 TPRVM001 TPRDG4X2 TPRAN2X1	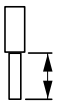			
	10 mm	0.2–2.5 mm²	0.2–2.5 mm²	0.25–2.5 mm²
	0.40 in.	AWG 24–14	AWG 24–14	AWG 22–14

The pitch between the pins is 5.08 mm except for TPRVM001, which is 7.62 mm.

Installation Setup

What's in This Chapter

Introduction 128
Configuration Tools 129
Powering Up the Island 130
Connecting to TeSys™ island 132
Setting the TeSys island IPv4 Address via OMT 134
Connecting to TeSys™ island with SoMove™ Software 135
Importing the Project File to the DTM 135
Configuring the Island Parameters 136
Connecting to TeSys island with SoMove Software 137
Loading the Project File to the Island 138
Verifying the System Installation in Test Mode 139
Verifying the TeSys island Configuration 139
Verifying the System Wiring 140
Apply Mains Power 140
Force Mode 141
Disconnect Mains Power 142

This section provides an overview for setting up TeSys island in preparation for commissioning with the PLC.

Introduction

Setup must be performed after the physical installation of the TeSys island and all other hardware devices and verification of the TeSys island topology. The following table summarizes the setup steps. The person performing the setup must be familiar with the TeSys island modules and avatars.

Setting up TeSys™ island

Step	Action
1	Power up the TeSys island.
2	Connect to the TeSys island with the TeSys Island DTM or Operation and Maintenance Tool (OMT).
3	Set the island IPv4 address, if connected via OMT.
4	Import the project file to the TeSys Island DTM.
5	Configure the TeSys island parameters.
6	Connect to the TeSys island with SoMove software.
7	Load the project file to the TeSys island.
8	Verify the system installation in Test mode.
9	Verify the TeSys island configuration.
10	Verify the system wiring.
11	Apply mains power.
12	Use Force mode to simulate commands from the PLC.

Configuration Tools

TeSys island can be set up using the Operation and Maintenance Tool (OMT) and the latest TeSys island DTM.

The initial project file for the TeSys island can be generated using the TeSys island Configurator tool. This project file must be imported into the TeSys island DTM. It includes the TeSys island topology and the TeSys Avatars selected for the TeSys island. If the project file has not yet been created, SoMove software can be used to create the TeSys island project file in offline mode.

Once the configuration of the TeSys island and parameter selection is complete, SoMove software can be used to load the project file onto the bus coupler, which manages the settings of the entire TeSys island.

Once the TeSys island has been initialized, using the digital tools you can enter Test mode to verify that the power devices are functioning properly before applying the mains power supply and using Force mode to test the avatar logic.

Powering Up the Island

To power up TeSys island, perform the steps in the following table.

Powering Up the Island

Step	Action
1	Energize the bus coupler with 24 Vdc. The island will enter a pre-operational stage once it has completed booting.
2	Check the visual indicators on the bus coupler. See TPRBCEIP – Bus Coupler LEDs, page 130
	• The PWR LED on the bus coupler, which indicates power supply and system status, should be steady green. • **TPRBCEIP** — The MS LED, which indicates bus coupler status, should be flashing green, indicating that the island has not yet been configured. • **TPRBCPFN** — The BF LED, which indicates an inoperative bus coupler system, should be red, indicating that the island has not yet been configured. • **TPRBCPFB** — The COM LED, which indicates bus coupler status, should be flashing red acyclic (two quick flashes per second), indicating that the island has not yet been configured.

TPRBCEIP – Bus Coupler LEDs

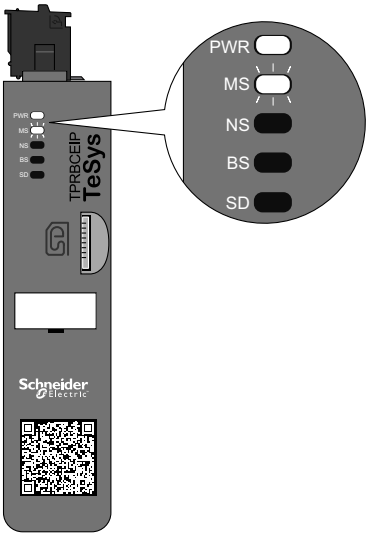

TPRBCPFN – Bus Coupler LEDs

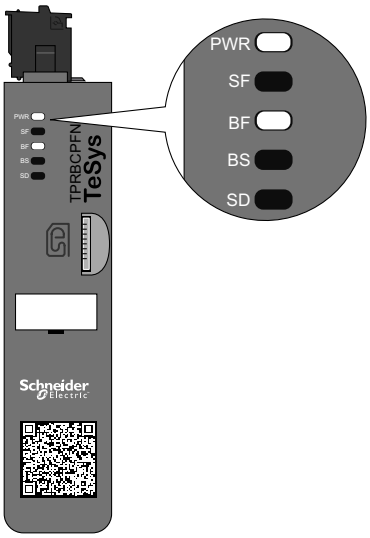

TPRBCPFB – Bus Coupler LEDs

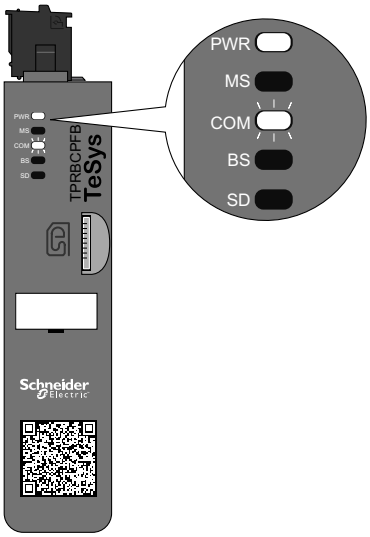

Connecting to TeSys™ island

The initial connection to TeSys island can be performed using the TeSys island DTM or the Operation and Maintenance Tool (OMT). Depending on your preference, follow the instructions for using DTM or the OMT.

Connecting with TeSys™ island DTM

You can connect to the TeSys island using the default IPv4 IP address on the bus coupler with SoMove software running the TeSys island DTM. The PC must be on the same subnet as the default IPv4 address of the bus coupler. The TeSys island default addressing mode is DHCP. While in DHCP mode, the island can be reached with a default IP address of 10.10.0.1 with subnet mask 255.0.0.0.

Proceed to the Connecting to TeSys island with SoMove Software procedure to use the TeSys island DTM.

If you prefer to connect to the TeSys island using the OMT, proceed to the Connecting with the OMT procedure.

Connecting with the OMT

This section describes how to connect to the TeSys island with the Operation and Maintenance Tool (OMT) using IPv6 or IPv4.

OMT IPv6 Connection

Use this procedure to connect to TeSys island with the Operation and Maintenance Tool (OMT) after the island has been physically installed and powered up. The OMT will connect directly to the bus coupler using the default IPv6 address.

To perform this procedure, the island must be on the network and able to communicate with the OMT using a wireless or wired connection on a standard Windows® operating system.

Connecting to the TeSys island with the OMT via IPv6

Step	Action
1	Verify that your PC is connected to the same network as the bus coupler through a wireless or wired connection.
2	Access the Network tab on your PC using File Explorer.
3	Under Other Devices, the TeSys island will appear as "TeSysisland_FFFF." If the TeSys island does not appear, you may have to disable the firewall running on your PC.
4	Right click on "TeSysisland_FFFF" and select Properties. The properties for the TeSys island will be displayed.
5	Click the Device web page link. This is the IPv6 IP address of the bus coupler. The OMT will launch in your default browser.
6	If you are taken to the page, "Your Connection is not private": a. Click the Advanced button. b. Click the link "Proceed to xxx.xxx.xx.xx (unsafe)" to continue.
7	Login with the default username and password (admin, schneider18) and click Login.
8	The Change Password window will open. Set a secure password and record it before continuing. If you forget your password, a factory reset will be required to regain access to the OMT. You are now logged into the OMT and connected to the TeSys island.

OMT IPv4 Connection

Use this procedure to connect to TeSys island with the Operation and Maintenance Tool (OMT) after the TeSys island has been physically installed and powered up. If the TeSys island is set to DHCP (which is the default), then the OMT can connect directly to the bus coupler using the default IPv4 address.

To perform this procedure, the TeSys island must be on the network and able to communicate with the OMT using a wireless or wired connection.

Connecting to the TeSys island with the OMT via IPv4

Step	Action
1	Verify that your PC is connected to the same network as the bus coupler through a wireless or wired connection.
2	Configure your PC with the IPv4 IP address of 10.10.0.2 and the subnet mask of 255.0.0.0.
3	Enter the address (format: *https://10.10.0.1*) of the bus coupler into the web browser on your tablet to access the OMT running on the bus coupler. **NOTE:** The recommended browsers are Chrome or Safari.
4	If you are taken to the page, Your Connection is not private: a. Click the Advanced button. b. Click the link **Proceed to 10.10.0.1 (unsafe)** to continue.
5	Login with the default username and password (admin, schneider18) and click Login.
6	The Change Password window will open. Set a secure password and record it before continuing. If you forget your password, a factory reset will be required to regain access to the OMT. You are now logged into the OMT and connected to the TeSys island.

Setting the TeSys island IPv4 Address via OMT

Use this procedure to set the IPv4 IP address and gateway information on the TeSys island after you have connected to the bus coupler.

Once you are connected to the island, setting the IPv4 IP address and gateway information can be performed using the OMT.

NOTE: You will not lose connection to the OMT while assigning the IPv4 IP address with the IPv6 IP address connection. The default IPv6 IP address and the assigned IPv4 IP address are both accessible after this procedure is complete. You will lose connection to the OMT while assigning the IPv4 IP address with the default IPv4 address connection.

Setting the Island IPv4 Address — OMT

Step	Action
1	Click the SETTINGS icon.
2	Click the System avatar.
3	Click FIELDBUS SETTINGS.
4	Change the IP Mode to Fixed Address to manually set the IP address.
5	Enter the Fieldbus IPv4 Address, Fieldbus Subnet Mask, and Gateway Address of the bus coupler.
6	Enter the Network Name for the bus coupler.
7	Click Save.
8	Configure your PC with an IPv4 IP address and subnet mask in the same network that you recently applied to the bus coupler.
9	Enter the new address (format: *https://xxx.xxx.xxx.xxx*) of the bus coupler into the web browser on your tablet to access the OMT running on the bus coupler. **NOTE:** The recommended browsers are Chrome or Safari.
10	Login to the OMT with the new password and verify the IP address has been successfully changed.

Connecting to TeSys™ island with SoMove™ Software

Perform the steps in the following table the first time you connect to TeSys island with a PC running SoMove software and the TeSys island DTM. SoMove software is a Microsoft® Windows®-based application using open FDT/DTM technology. SoMove contains DTMs for different devices. The TeSys island DTM enables the configuration, monitoring, control, and customization of TeSys island functions.

NOTE: Ensure that you always use the latest version of TeSys island DTM.

Connecting to the TeSys island with SoMove Software

Step	Action
1	Check the LED indicators on the bus coupler and verify that power is applied. Verify that the **PWR LED**, indicating the power supply and system status, is steady green, and the **MS LED**, indicating the bus coupler status, is flashing green.
2	Connect a PC (with SoMove software and the TeSys island DTM installed) to the terminal/service port on the bus coupler using an RJ45 cable.
3	Launch the SoMove software on the PC.
4	Click the **Connect** button in the Start screen.
5	In the Scan Result dialog box, click the Modbus TCP tab.
6	Click the edit symbol next to the question mark.
7	In the Advanced settings dialog box, enter the network address of the TeSys island in the Target address. The network address by default is 10.10.0.1 or enter the IP address that was assigned using the OMT.
8	Select Single as the Scan Type and click OK.
9	Click Scan Network in the Scan Result dialog box.
10	Select the TeSys island device and click Connect.

Importing the Project File to the DTM

This section describes how to import the project file generated with the TeSys™ island Configurator tool into the TeSys island DTM.

NOTE: SoMove™ software and the TeSys island DTM are available as downloads from www.schneider-electric.com.

Open SoMove™ software then perform the steps in the following tables.

In the Start screen

Step	Action
1	Under **Project**, click **create a Project OFF-line**.
2	In the **Select a Device** screen, click **TeSys island** and then click **Create**.

In the TeSys island DTM

Step	Action
1	Click **Device** at the top of the screen and select **Import -> Import Pre-Sales Format** from the drop down menu.
2	A pop-up window will appear. Click **Yes** to continue.

In the Open File screen

Step	Action
1	Locate the .XML file that you want to import.
2	Click on the file that you want to import. The name of the file will now be displayed in the **File Name** field.
3	Click the **Open** button. The island configuration has now been imported into the TeSys island DTM.

In the TeSys island DTM

Step	Action
1	Click **File -> Save As** and enter the name of the island in the **File Name** field..
2	Click the **Save** button.

Result: The initial *.xml* configuration file is now converted to a new *.psx* SoMove project file.

Configuring the Island Parameters

Settings are configurable for the system, load, and device Avatars to enable energy monitoring and to customize the Avatar settings. Refer to TeSys™ island DTM online help for assistance in selecting the settings. Press F1 while in the tool for help.

If the DTM displays the message "The system as configured using Modbus/TCP may result in a lack of data consistency for one function block input. Please see the installation guide for more information." then one multi-byte function block input datum may be accessed by multiple Modbus/TCP PLC reads and could be incorrectly displayed in the function blocks. Use EtherNet/IP to ensure data consistency.

System Avatar Settings

Configure the system Avatar settings for the Fieldbus and Ethernet services settings.

System Avatar Settings

Step	Action
1	Click on the **SETTINGS** tab in the DTM tool.
2	Under **AVATARS**, click the System Avatar.
3	Configure the system Avatar settings for the Fieldbus and Ethernet services settings.
4	Click **OK** to confirm the settings. Save the project.

Energy Monitoring

Enable energy monitoring for each TeSys™ Avatar (except the system and device Avatars) as shown in the following table.

Enable Energy Monitoring

Step	Action
1	Click on **MY AVATAR**.
2	Click on each Avatar where energy monitoring will be used.

Enable Energy Monitoring (Continued)

Step	Action
3	In **AVATAR PARAMETERS**, change the setting in **LOAD ENERGY MONITORING** from **No** to **Yes**.
4	Click **OK** to save the changes.

Avatar Settings

⚠WARNING

UNINTENDED EQUIPMENT OPERATION

- Be sure to set the protection function parameters according to the required protection level of the controlled motors and loads.
- TeSys™ GV2 motor circuit breakers should not be used with TeSys island for loads with trip classes set above trip class 15.

Failure to follow these instructions can result in death, serious injury, or equipment damage.

Configure the protection functions for each TeSys™ Avatar. Protection functions vary based on the Avatar selected.

Avatar Settings

Step	Action
1	Click on the **SETTINGS** tab in the DTM tool.
2	Under **AVATARS**, click the Avatar to be configured.
3	Configure the protection functions for each Avatar.
4	Click **OK** to confirm the settings. Save the project.

Connecting to TeSys island with SoMove Software

Perform the steps in the following table the first time you connect to TeSys island with a PC running SoMove software and the TeSys island DTM. SoMove software is a Microsoft® Windows®-based application using open FDT/DTM technology. SoMove contains DTMs for different devices. The TeSys island DTM enables the configuration, monitoring, control, and customization of TeSys island functions.

NOTE: Ensure that you always use the latest version of TeSys island DTM.

Connect to the TeSys island with SoMove Software

Step	Action
1	Check the LED indicators on the bus coupler and verify that power is applied. Verify that the **PWR LED**, indicating the power supply and system status, is steady green and the **MS LED**, indicating bus coupler status, is flashing green.
2	Connect a PC, with SoMove software and the TeSys island DTM installed, to the service port on the bus coupler using an RJ45 cable.
3	Launch the SoMove software on the PC.
4	Click the **Connect** button in the Start screen to establish communication.

Loading the Project File to the Island

SoMove software with TeSys island DTM allows you to import a project file created with the Motor Control Configuration tool. Or you can use SoMove software to build a new TeSys island and generate the project file without being connected to the TeSys island.

After you have created the project file and powered up the island, you can connect the PC running SoMove software to the service port on the bus coupler, or you can connect a Wifer to the service port and communicate using Wi-Fi. The TeSys island DTM has a built-in scan mechanism that discovers the available TeSys island on the network. Once the scan is complete, you can use the Locate command in the tool to trigger a visual LED indicator on the bus coupler of the correct TeSys island. Once you are connected to the TeSys island, use SoMove software to load the project file for the TeSys island to the bus coupler.

Perform the steps in the table below to load the project file.

Load the Project File to the Island

Step	Action
1	Launch SoMove software.
2	Connect to the TeSys island.
3	Click **Store to Device**.
4	Select the project file that you wish to load to the bus coupler from the PC.

Verifying the System Installation in Test Mode

⚠WARNING

UNINTENDED EQUIPMENT OPERATION

Before using the Test mode, ensure that energizing loads will not result in unsafe conditions.

Failure to follow these instructions can result in death, serious injury, or equipment damage.

During the pre-operational and operational states you can enter and exit Test mode.

Test Mode allows direct control of the power modules and digital I/O modules using the Operation and Maintenance Tool (OMT). In Test mode, the only TeSys Avatar that is activated is the system avatar. Once you enter Test mode, you must manually exit Test mode to return the TeSys island to the pre-operational state. See Exiting Test Mode, page 139.

Verifying the System Installation in Test Mode

Step	Action
1	Access the physical devices on the TeSys island: • To access the PHYSICAL VIEW using the TeSys island DTM, go to the Diagnostics → Devices tab and click on the device in the Physical View section. • To access the TeSys island View using the OMT, click on the TeSys island View panel, then click on the device.
2	Click the Close or Open command under Test Command.
3	Click Ok in the WARNING message pop-up window to execute the test command. This will close or open the contactor or input on the device.
4	Click any device in the TeSys island topology to perform a test command.
5	After you test all devices, exit Test mode as described in the following table.

Exiting Test Mode

Step	Action
1	Click the Diagnostics panel or tab.
2	Click the Exit Test mode button. A WARNING message pop-up window will appear.
3	Click Ok in the pop-up window to confirm that you want to exit Test mode. The status banner at the top will indicate that the system is no longer in Test mode.

Verifying the TeSys island Configuration

Verify that all hardware is operating correctly and that all settings for the TeSys island, including the trip and protection notifications, have been configured.

Verify the Island Configuration

Step	Action
1	Visually inspect the bus coupler LEDs.
2	Visually inspect the power module LEDs.
3	Visually inspect the I/O and accessory module LEDs.
4	In SoMove software, verify that the configuration settings for the TeSys Avatar match the intended settings.

Verifying the System Wiring

After all required and optional parameters have been configured and you have tested the functionality of the power devices, check the system wiring, which can include:

- Power wiring (see the table below)
- Bus coupler connections (see the table below)
- I/O wiring
- SIL(36) interface module wiring
- Voltage interface module wiring

Perform the steps in the following table to verify the power wiring.

Verify the Power Wiring

Step	Action
1	Visually confirm that the actual power wiring matches the intended power wiring, as described in the power wiring diagram.
2	Look for any detected trips or notifications in the OMT or DTM.

Verify the Bus Coupler Connections

Step	Action
1	Verify that the Fieldbus connections are in place.
2	Verify that the 24 V control power connection is securely in place.
3	Verify that the flat cables from the bus coupler to all modules are securely in place

Apply Mains Power

⚠⚠DANGER

HAZARD OF ELECTRIC SHOCK, EXPLOSION, OR ARC FLASH

- Use only the specified voltage when operating this equipment and any associated products.

Failure to follow these instructions will result in death or serious injury.

Apply Mains Power

Step	Action
1	Read and understand all instructions in Precautions, page 10.
2	Apply mains power.

(36) Safety Integrity Level according to standard IEC 61508.

Force Mode

⚠WARNING

UNINTENDED EQUIPMENT OPERATION

- Before using Force mode, make sure that the forcing parameters or energizing loads will not result in unsafe conditions.

Failure to follow these instructions can result in death, serious injury, or equipment damage.

NOTE: Once Force mode is activated, commands from the digital tools take priority over commands from the PLC or Local until you exit Force mode.

Once the TeSys island is in the operational state, Force mode can be activated and deactivated using the OMT or TeSys island DTM.

Using Force Mode to Simulate Commands from the PLC

Force mode allows you to test the logic of any TeSys avatar by simulating receipt of commands from the PLC.

Simulating a PLC Command with Force Mode

Step	Action
1	Access Force mode: • To access Force mode using the OMT, navigate to the **Avatar View** panel and select an avatar. Click **I/O View**. The logic diagram for the selected avatar is displayed. • To access Force mode using the TeSys island DTM, click the **Diagnostics** tab and select an avatar from **Avatars**. Click **Status**. The logic diagram for the avatar is displayed.
2	To simulate receipt of a PLC command: • To simulate an Open command from the PLC, click **Force 0**. • To simulate a Close command from the PLC, click **Force 1**.
3	When finished, exit Force mode. See Exiting Force Mode, page 142.

Using Force Mode to Simulate Status Updates to the PLC

Force mode also allows you to simulate transmission of avatar status updates from the island to the PLC.

Simulating Avatar Status Updates from the Island to the PLC

Step	Action
1	Access Force mode from the OMT or TeSys island DTM as described in Simulating a PLC Command with Force Mode, page 141.
2	To simulate avatar status: • Click **Force 0** to simulate transmission of contactor Closed status to the PLC. • Click **Force 1** to simulate transmission of contactor Open status to the PLC.
3	When finished, exit Force mode. See Exiting Force Mode, page 142.

Using Force Mode to Simulate Status Changes of the Digital I/O Module Inputs and Outputs

Force mode also allows you to simulate status changes of the digital I/O module inputs and outputs. When force mode has not been applied, the status box is gray and shows Not Applied.

Status Box

Force Command	Input From PLC	Status To PLC
Force 0	Off	Off
Force 1	On	On

Step	Action
1	Access Force mode from the OMT or TeSys island DTM as described in Simulating a PLC Command with Force Mode, page 141.
2	To simulate I/O status, under **From PLC**: • Click **Force 0** to turn Off the digital output. • Click **Force 1** to Close the digital output status.
	Under **To PLC**: • Click **Force 0** to Close the digital input status. • Click **Force 1** to Open the digital input status.

Exiting Force Mode

To exit Force mode, perform the steps in the following table:

Exiting Force Mode

Step	Action
1	To exit Force mode using the TeSys island DTM, in the **Diagnostics** tab, click **Exit** next to **Force Mode**, and then confirm you wish to exit.
2	To exit Force mode from the OMT:
	Click the **Diagnostics** panel.
	Click the **Exit force mode** button. A hazard message pop-up window appears. Click **Yes** to confirm that you want to exit Force mode. The status banner at the top indicates that the system is no longer in Force mode.

Disconnect Mains Power

Disconnect Mains Power

Step	Action
1	Read and understand all instructions in Precautions, page 10.
2	Disconnect mains power. TeSys island is now ready to be integrated into the machine programming environment.

Operations

What’s in This Part

OMT Operations 144

OMT Operations

What's in This Chapter

Operational Behavior.....144
Connecting Your Tablet and Using the OMT.....147
User Preferences.....151

This chapter describes the how to access and use the Operation and Maintenance Tool (OMT) to perform routine operation, maintenance, and troubleshooting tasks for TeSys island.

Operational Behavior

This section describes the following:

- The operational behavior of TeSys island.
- The possible system states during the initial power up and operation of the TeSys island.
- The basic operating features available during each state.

System States

Below are the possible states for the TeSys island, including a brief description.

Off

The TeSys island is not energized.

Pre-operational

The TeSys island enters the pre-operational state during the boot process.

- The fieldbus and service ports on the bus coupler begin to activate.
- The avatars selected for the island are not yet activated.
- All starters, SIL(37) starters, and I/O modules are de-energized, defined as follows:
  - Starters and SIL starters are in the open state
  - Outputs from the I/O modules are off (set to zero)

Operational

Once the TeSys island has finished booting, it enters the operational state if the following conditions exist:

- No events are detected.
- The project file on the micro SD card loads successfully to the bus coupler.
- The hardware passes consistency checks.
- All settings in the .PSX project file are applied.

Once the TeSys island is in the operational state, the fieldbus and service ports are fully activated. All avatars defined in the project file are activated and are processing the power modules and accessories in the TeSys island.

(37) Safety Integrity Level according to standard IEC 61508.

Test mode

You can enter test mode from the pre-operational and operational states.

Test mode gives you direct control of the power modules and the digital I/O module outputs, using the digital tools. These tools include SoMove™ software, running the TeSys™ island DTM, and the Operation and Maintenance Tool (OMT). During Test mode, the only avatar activated is the System avatar. Once you enter Test mode, you must manually exit Test mode to return the TeSys island to the operational state.

Minor Event

System Events

System events on the system include the following:

- No module in the island
- Too many physical modules detected in the island
- A voltage fluctuation in the island control power supply

NOTE: During a minor event at system level, the whole island system will be de-energized.

When the TeSys island encounters a minor event, the fieldbus and service ports remain activated. The only avatar activated is the System avatar. All starters, SIL starters, and I/O modules are de-energized, defined as follows:

- Starters and SIL starters are in the open state
- Outputs from the I/O modules are off (set to zero)

Avatar Events

Avatar events include the following:

- Asset Alarm
- Device Mismatch
- Device Data not updated
- A mismatch between the installed modules and the modules defined in the context file

NOTE: During a minor event at avatar level, only the respective avatar will de-energize instead of the whole system.

Fallback Mode

When TeSys island in degraded mode, avatars with local control are driven by local inputs. All other modules in the avatars enter Fallback Mode configured. Following are the options available for configuration of Fallback Mode for each avatar:

- Off
- On
- Hold

When TeSys island is in degraded mode and if Fallback Mode is configured as Off for the avatar then:

- Avatars with Starters or SIL starters place all outputs in the open state
- Power interface with I/O avatar digital outputs are set to Off
- Digital I/O avatar outputs are set to Off
- Analog I/O avatar output is set to default value
- If there is no I/O assignment to the digital output port, the digital output on avatars with digital I/O modules and starters, safe starters, or PIM modules will be set to Off
- If there is no I/O assignment to the analogue output port, the analogue output of avatars with analogue I/O modules and starters, safe starters, or PIM modules will be set to default value
- The output of an analogue or digital I/O module will not enter a Fallback Mode, if there is any I/O assignment to that output. The output will respect the I/O assignment condition

When TeSys island is in degraded mode and if Fallback Mode is configured as On for the avatar then:

- Avatars with Starters or SIL starters place all outputs in the close state
- Power interface with I/O avatar digital outputs are set to On
- Digital I/O avatar outputs are set to On
- Analog I/O avatar output will retains the last known value
- If there is no I/O assignment to the digital output port, the digital output on avatars with digital I/O modules and starters, safe starters, or PIM modules will be set to On
- If there is no I/O assignment to the analogue output port, the analogue output of avatars with analogue I/O modules and starters, safe starters, or PIM modules will retain the last known value
- The output of an analogue or digital I/O module will not enter a Fallback Mode, if there is any I/O assignment to that output. The output will respect the I/O assignment condition

When TeSys island is in degraded mode and if Fallback Mode is configured as Hold for the avatar then:

- Avatars with Starters or SIL starters retain the value of their last command
- Power interface with I/O avatar digital outputs are retained to their last known command
- Digital I/O avatar outputs are are retained to their last known command
- Analog I/O avatar output will set to retains the last known value
- If there is no I/O assignment to the digital output port, the digital output on avatars with digital I/O modules and starters, safe starters, or PIM modules will retained to their last known command
- If there is no I/O assignment to the analogue output port, the analogue output of avatars with analogue I/O modules and starters, safe starters, or PIM modules will retain the last known value
- The output of an analogue or digital I/O module will not enter a Fallback Mode, if there is any I/O assignment to that output. The output will respect the I/O assignment condition

Major Event

When the TeSys island encounters a major event, the fieldbus and service ports are not activated. No avatars are activated, including the System avatar. All power modules and I/O modules are in the Off state. A cycle of the control power is required to exit a major event state.

Connecting Your Tablet and Using the OMT

The section explains how to connect your tablet to the TeSys island bus coupler. To perform this procedure, the island must be on the network and able to communicate with the tablet using a wireless or wired connection.

Once connection to the bus coupler is established, you can access the OMT.

Perform the following steps to connect the tablet to the OMT:

1. Enter the address (format: https://xxx.xxx.xxx.xxx) of the bus coupler into the web browser on your tablet to access the OMT running on the bus coupler.

   NOTE: The recommended browsers are Chrome or Safari.
2. If you are taken to the page, "Your Connection is not private":
   a. Click the **Advanced** button.
   b. Click the link **Proceed to xxx.xxx.xxx.xxx (unsafe)** to continue.

   Result: The OMT login screen is displayed on the screen.

   OMT Login Screen

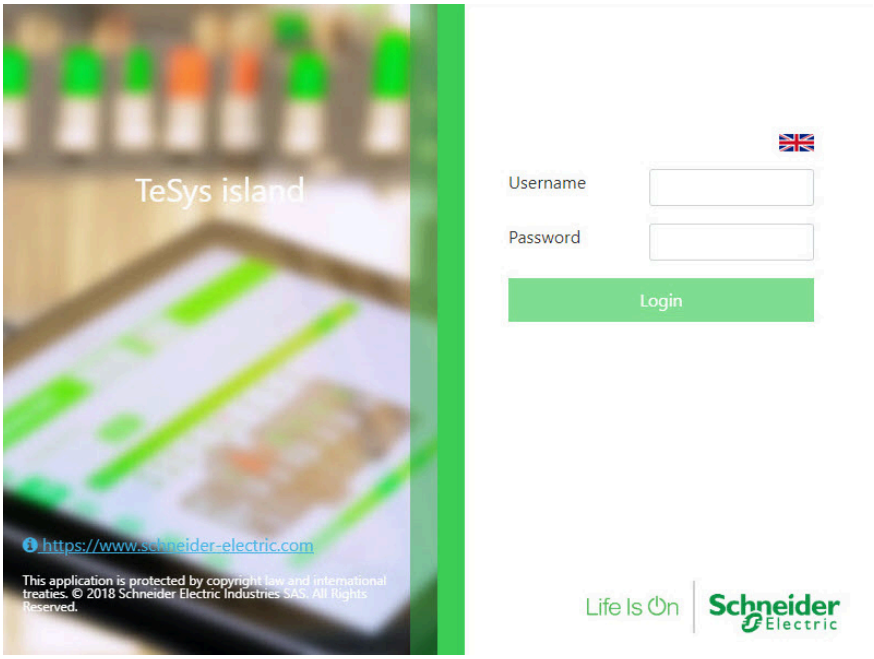

3. When connecting for the first time, enter `admin` as the username and `schneider18` as the password.
4. Click **Login**.

   Result: You will be prompted to change your password.
5. Enter `schneider18` as the current password.

6. Enter your new password twice and click **Submit**.

   NOTE: Passwords must contain a minimum of 10 characters, with at least one alphabetic and one numeric character.

Change Password

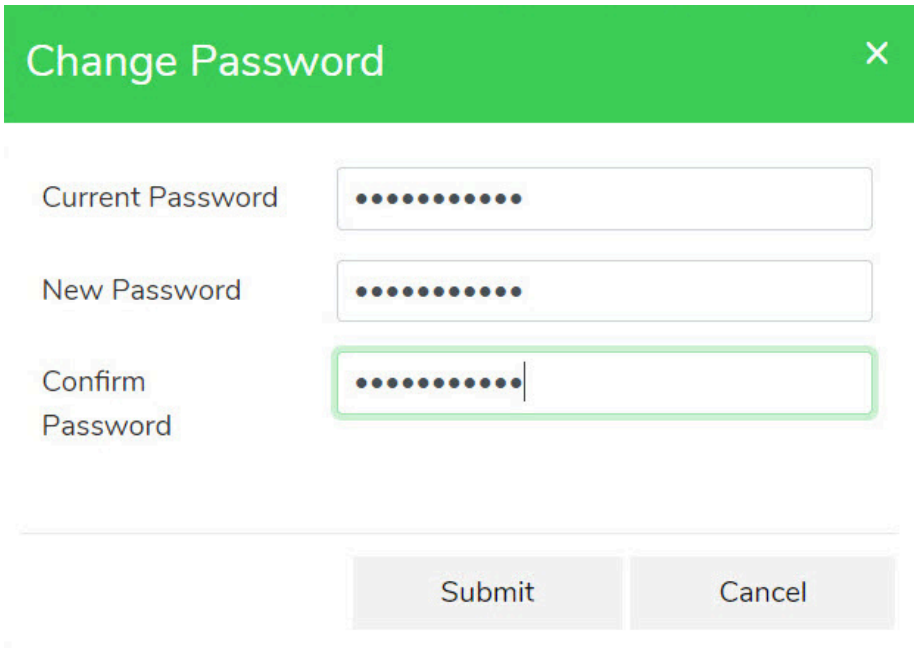

Once you log in, the **CONTROL PANEL** window is displayed in the OMT home screen. If you do not have permission to access the **CONTROL PANEL**, the **Avatar View** window is displayed in the OMT screen. The name of the connected TeSys island is displayed at the top of the status banner. Also displayed are the date and time, and the type of control that has been granted. See Type of Control, page 148.

Type of Control

FULL-CONTROL	This type of access is granted to the first user that logs in to the TeSys island. This user has full control of the system.
READ-ONLY	This type of access is granted to any additional users that log in to the system while another user is connected with FULL-CONTROL access. These additional users are granted read-only access, since only one user can have full control at a time.

The following information is displayed on the OMT Home Screen:

- The number of critical and non-critical alarms.
- An indicator flashes red when **Test Mode** or **Force Mode** is active.
- The **Hello** message, confirming that you are currently logged in to the system.
- The option to **Logout** of the OMT.
- A question mark (?) you can click to get help.

OMT Home Screen

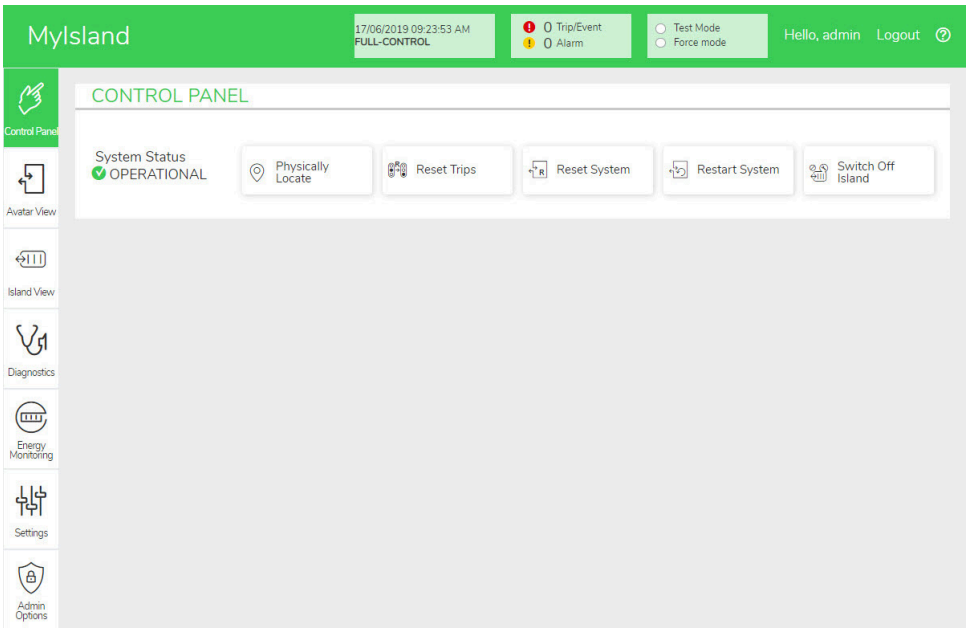

The OMT home screen provides access to a variety of task-oriented panels. Select the desired panel by clicking the corresponding button on the left side of the screen:

- Control Panel (refer section Control Panel, page 153)
- Avatar View (refer section Avatar View Panel, page 155)
- Island View (refer section Island View Panel, page 162)
- Diagnostics (refer section Diagnostics Panel, page 168)
- Energy Monitoring (refer section Energy Monitoring Panel, page 170)
- Settings (refer section Settings Panel, page 173)
- Admin Options (refer section Admin Options Panel, page 176)

Connecting to the OMT Using the Default IP Address

Connect to the island with the Operation and Maintenance Tool (OMT) using the IPv6 or default IPv4 address.

OMT IPv6 Connection

After the island has been physically installed and powered up, you can use this procedure to connect to the TeSys island with the OMT. The OMT can connect directly to the bus coupler using the IPv6 address.

To perform this procedure, the island must be on the network and able to communicate with the OMT using a wireless or wired connection on a standard Windows® operating system.

Connecting to the TeSys island with the OMT via IPv6

1. Verify that the PC is connected to the same network as the bus coupler through a wireless or wired connection.
2. Access the Network window on the PC via the Navigation Pane in File Explorer (called Windows Explorer prior to Windows 8).
3. Under Other Devices, the TeSys island appears as "TeSysisland_xxxx." If the island does not appear, you may have to disable the firewall running on your PC.
4. Right-click "TeSysisland_xxxx" and select **Properties**.

   Result: The island properties are displayed.
5. Click the device web page link. This is the IPv6 IP address of the bus coupler.

   Result: The OMT launches in your default browser.
6. If you are taken to the page, "Your connection is not private", then perform the following steps:
   a. Click the **Advanced** button.
   b. Click the link **Proceed to [xxxx::xxx:xxxx:xxxx:xx] (unsafe)** to continue.

      Result: The OMT login screen is displayed on the screen.
7. Log in with the default username and password (`admin`, `schneider18`) and click **Login**.

   Result: The **Change Password** window opens.
8. Set a secure password and record it before continuing.

   Result: You are now logged in to the OMT and connected to the island.

   NOTE: If you forget your password, a factory reset will be required to regain access to the OMT. For more information, refer section Performing a Factory Reset, page 217.

OMT IPv4 Connection

Use this procedure to connect to TeSys™ island with the Operation and Maintenance Tool (OMT) after the island has been physically installed and powered up. If the TeSys island is set to DHCP (which is the default) then the OMT can connect directly to the bus coupler using the default IPv4 address.

To perform this procedure, the island must be on the network and able to communicate with the OMT using a wireless or wired connection.

Connecting to the TeSys island with the OMT via the default IPv4 address

1. Verify that your PC is connected to the same network as the bus coupler through a wireless or wired connection.
2. Configure your PC with the IPv4 IP address of 10.10.0.2 and the subnet mask of 255.0.0.0
3. Enter the address (*https://10.10.0.1*) of the bus coupler into the web browser on your tablet to access the OMT running on the bus coupler.

   NOTE: The recommended browsers are Chrome or Safari.
4. If you are taken to the page, "Your connection is not private":
   a. Click Advanced.
   b. Click the link "Proceed to 10.10.0.1 (unsafe)" to continue.
5. Log in with the default username and password (*admin*, *schneider18*) and click Login.
   The Change Password window opens.
6. Set a secure password and record it before continuing.

   NOTE: If you forget your password, a factory reset will be required to regain access to the OMT.

You are now logged in to the OMT and connected to the island.

User Preferences

This section describes how to select display preferences for each user, such as language and units of measure.

Click the **Hello** user link in the banner at the top of the main OMT panel.

Result: The **USER PREFERENCES** and **ACCOUNT SETTINGS** window opens.

Language

To change the display language in the OMT, perform the following steps:

1. In the **USER PREFERENCES** window, click **LANGUAGE**.
2. Select the desired language.

   The following languages are supported:

   - English
   - French
   - German
   - Italian
   - Russian
   - Spanish
   - Chinese
   - Turkish
   - Portuguese Brazilian

3. Click **Save**.

Setting Language

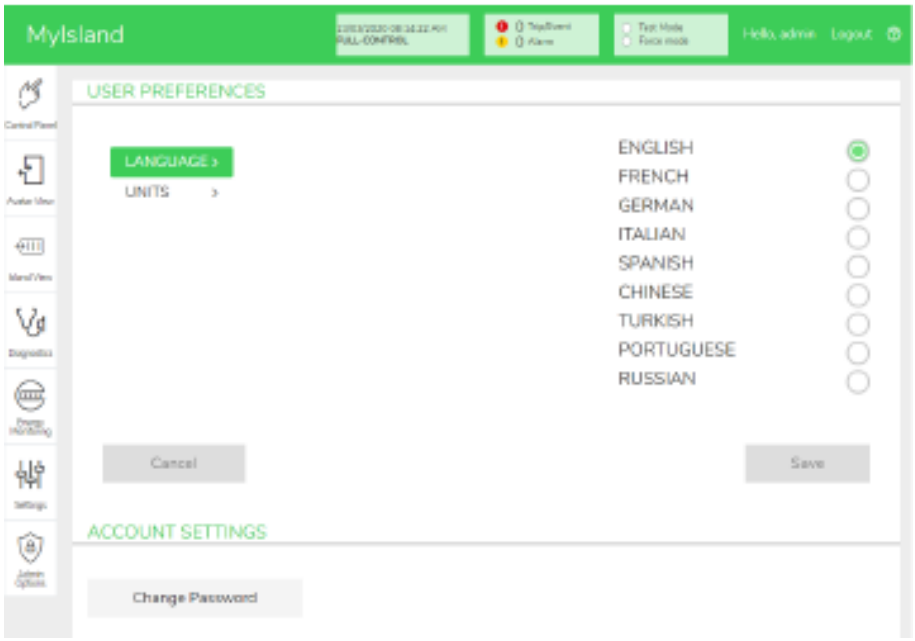

Units

To change the units of measurement displayed in the OMT, perform the following steps:

1. In the **USER PREFERENCES** window, click **UNITS**.
2. Change the settings as desired. For more information about the settings, refer the following table.

OMT settings for units of measurement

Unit	Options	Impacts
Motor Power	kW, hp	• Instantaneous Total Active Power • Maximum Total Active Power
Temperature	°C, °F	• Motor Overheat chart - Trip Status • Motor Overheat options - Thermal Protection settings
Date	dd/mm/yyyy, mm/dd/yyyy	• Banner time display • Log displays • Trip registers • Timestamp values for energy, power and voltage monitoring

3. Click **Save**.

Change Password

To change your OMT password once logged into the OMT, perform the following steps:

1. Click the **Hello** link (user link) at the top of the main OMT panel.

   Result: The **USER PREFERENCES** and **ACCOUNT SETTINGS** window opens.

User Preferences

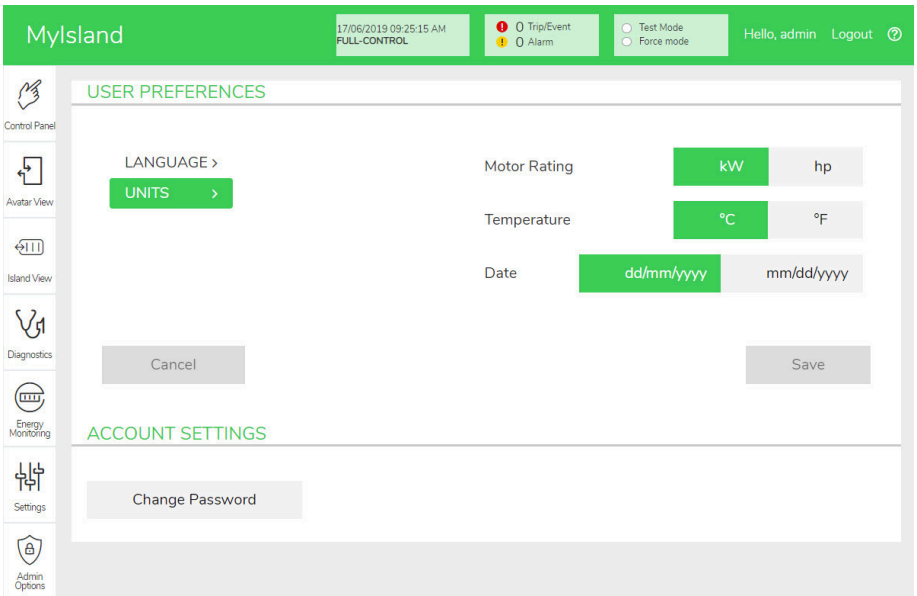

2. In the **ACCOUNT SETTINGS** section, click **Change Password**.
3. Enter the current password.
4. Enter the new password twice.
5. Click **Submit**.

NOTE: Passwords must contain a minimum of 10 characters, with at least one alphabetic and one numeric character.

Change Password

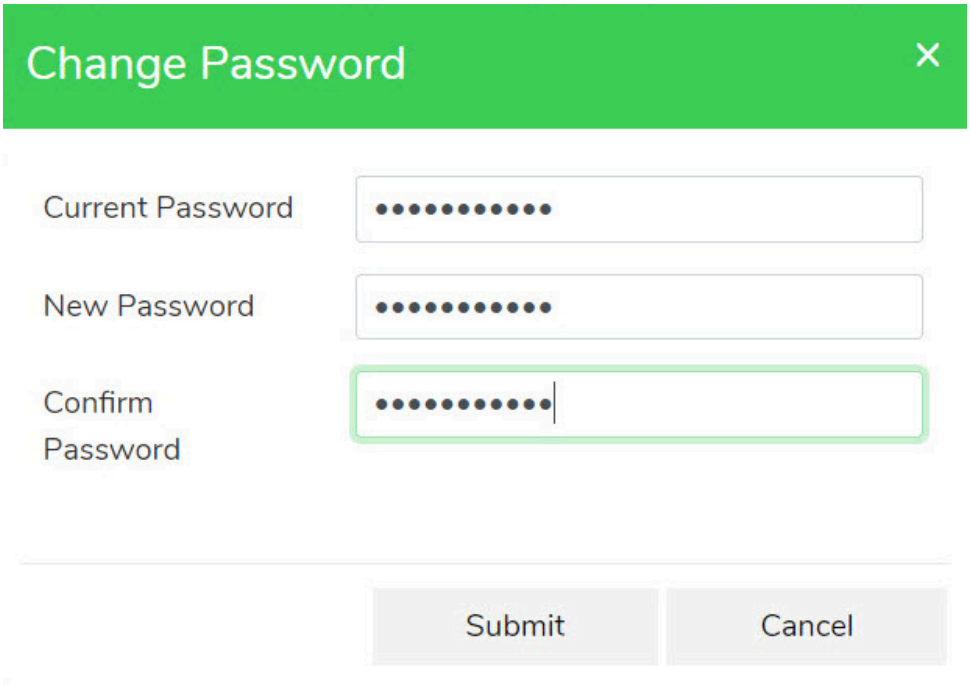

Control Panel

This section describes the **CONTROL PANEL** functions in detail:

- When to use them
- How to use them
- The expected result after issuing a command

Control Panel

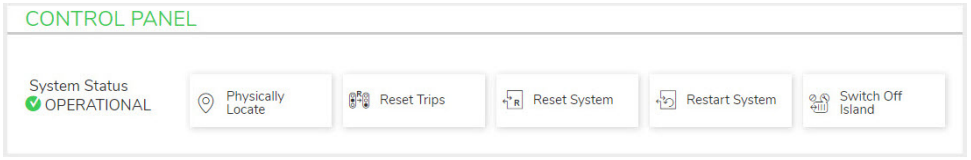

Physically Locate

Before starting any activities using the OMT, verify that you are connected to the correct TeSys island.

Perform the following steps:

1. Click the **Control Panel** icon.
2. Click **Physically Locate**.

   Result: The bus coupler's **PWR** LED illuminates a steady yellow for 5 s to help you identify which device the OMT is communicating with.

Reset Trips

If a protection trip occurs on your avatar, execute this command to reset all trips on the TeSys island.

Perform the following steps:

1. Click the **Control Panel** icon.
2. Click **Reset Trips**.

   Result: All trips on the TeSys island are reset.

Reset System

After a minor event occurs, execute this command to reset the system.

1. Click the **Control Panel** icon.
2. Click **Reset System**.

   Result: The island resets.

Restart System

If you need to restart the island, execute the **Restart System** command.

Perform the following steps:

1. Click the **Control Panel** icon.
2. Click **Restart System**.

   Result: The warning message is displayed on the screen.

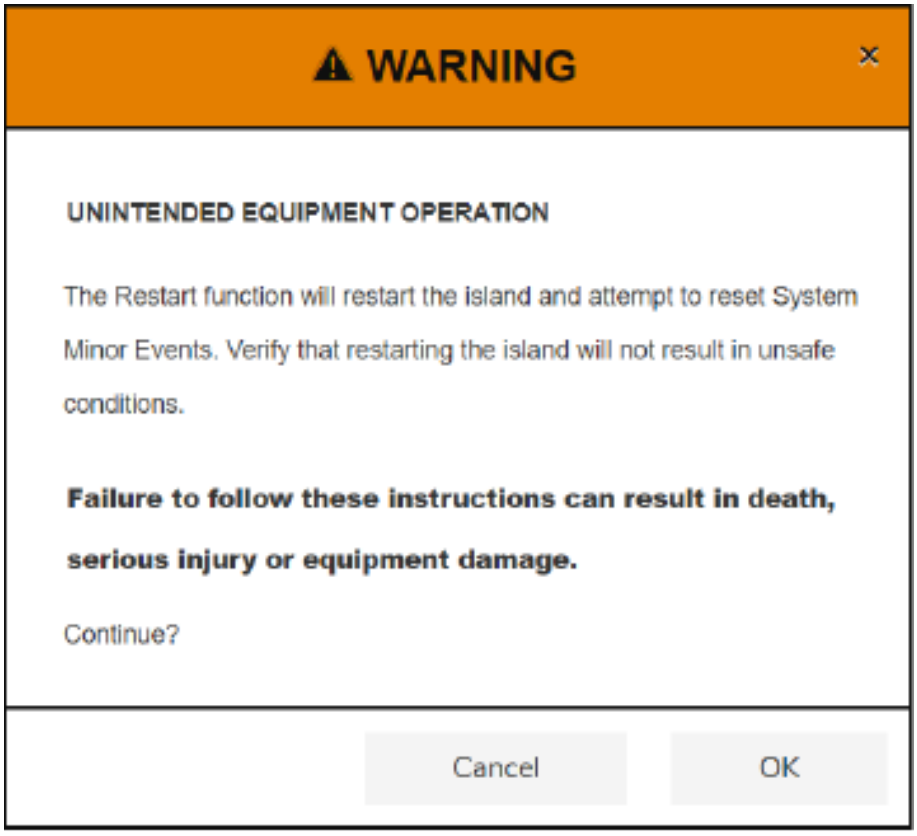

3. Read the warning message carefully and click **OK**.

   Result: The island restarts.

Switch Off Island

Issue the Switch Off Island command to turn off all loads on the TeSys island, so the system can be used for maintenance purposes.

1. Click the Control Panel icon.
2. Click Switch Off Island.

The TeSys island is placed into a minor event state. The red MS LED illuminates on the bus coupler (TPRBCEIP only). All outputs on the island are opened. The connection to the PLC remains in place. The OMT connection also remains active.

Avatar View Panel

In the Avatar View panel, you can do the following:

- Display status and counter information about a selected TeSys avatar
- Reset Minor Events, as well as trip and alarm counters, for the avatar

This panel includes an I/O view and a Counters view.

1. Click the **Avatar View panel** to display a list of avatars configured on the TeSys island.
2. Perform avatar maintenance tasks as necessary.

System Avatar

Click the **System** avatar to check the system status.

System Avatar

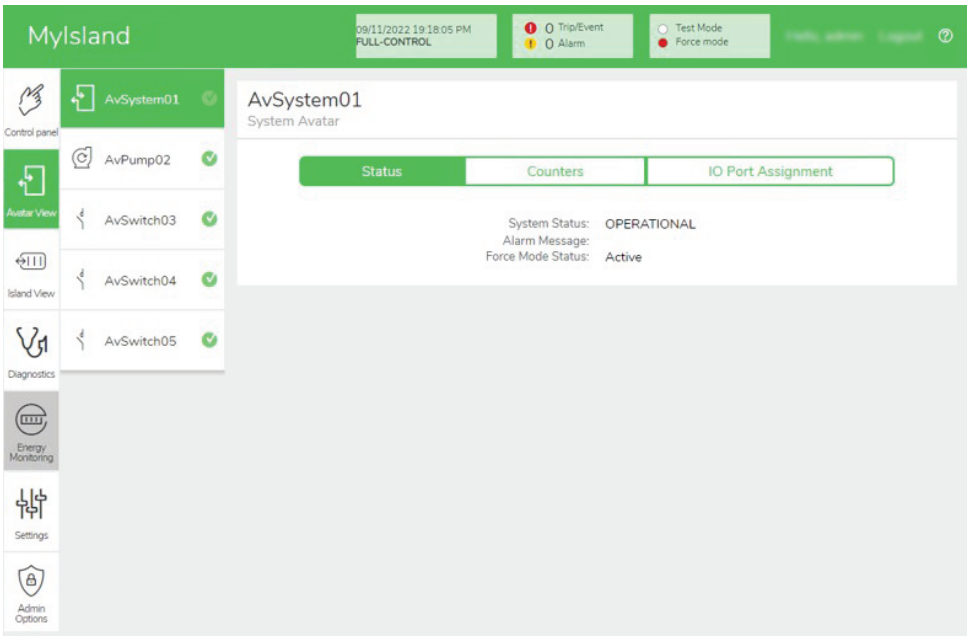

Status

To access the status information for the system, click the **Status** tab in the System avatar window. The following information is displayed in Status view:

- System status
- Alarm message
- Force mode status

Counters and Minor Event Reset

To access the trip and alarm counters for the system, or to reset Minor Events, click the Counters tab in the System Avatar window. The following information is displayed in Counters view:

- System Minor Events
- Fieldbus Comm. Events Counter
- System Alarms Counter
- Minor Events Record

To reset the System Minor Events, Fieldbus Comm. Events Counter, or the System Alarms Counter, click the Reset button.

Reset Window

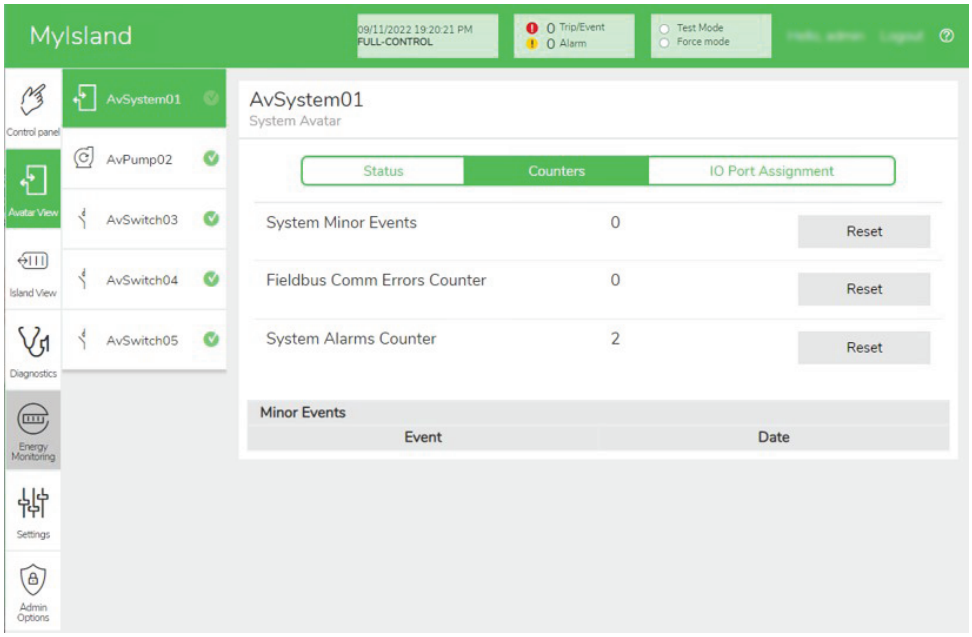

To reset the Avatar Minor Event counter, click the Reset option on the respective avatar window.

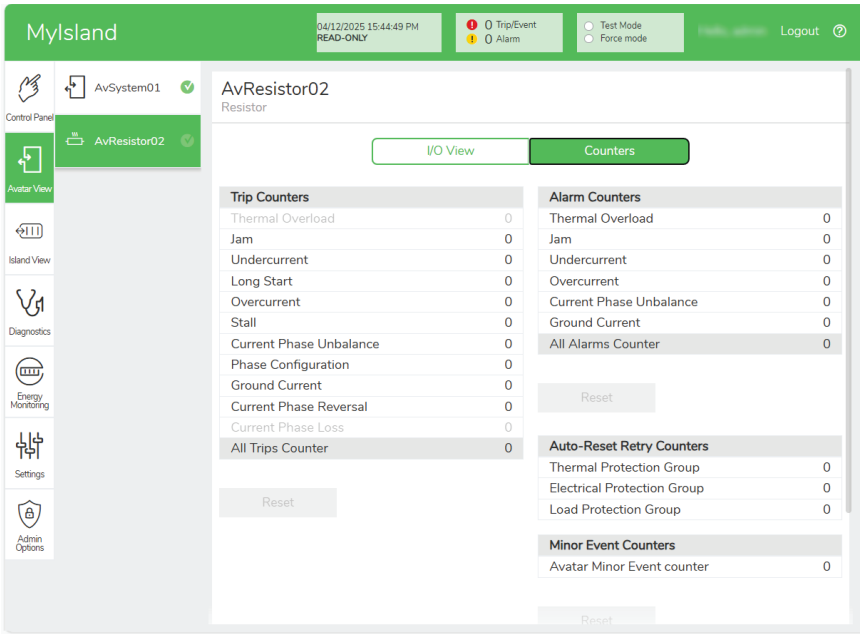

I/O Port Assignment

To access the I/O port assignments for the system, click the **I/O Port Assignment** tab in the System avatar window. The following information is displayed in the IO Port Assignment view:

- Avatar Name
- Input Name/Output Name
- Device Name
- Input Number/Output Number
- Value
- Fallback Mode

I/O Port Assignment

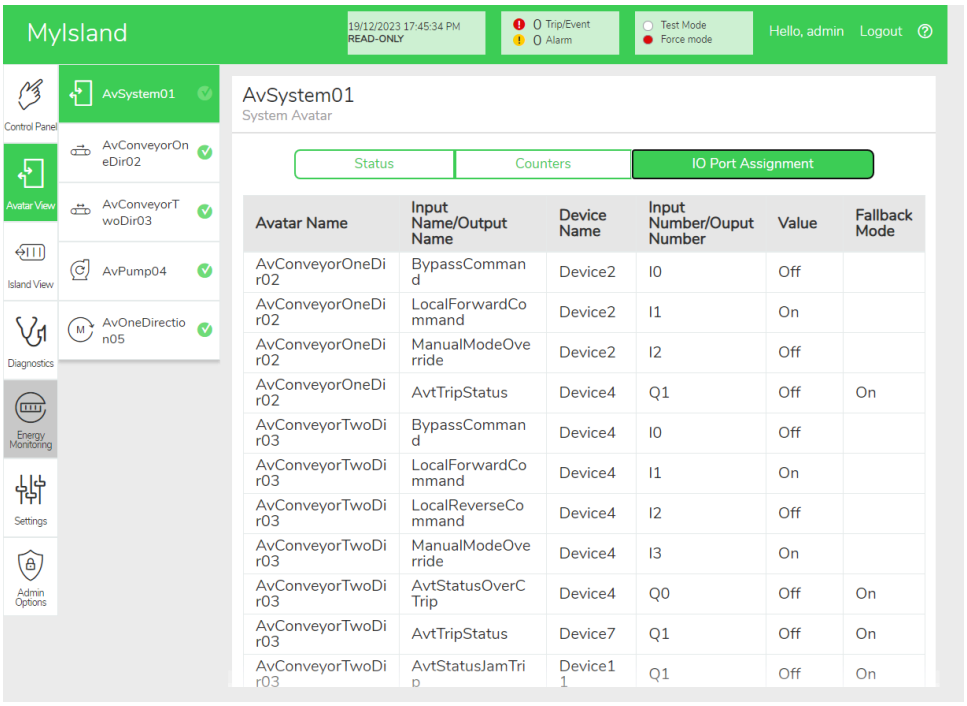

Avatar Name	Input Name/Output Name	Device Name	Input Number/Ouput Number	Value	Fallback Mode
AvConveyorOneDir02	BypassCommand	Device2	I0	Off	
AvConveyorOneDir02	LocalForwardCommand	Device2	I1	On	
AvConveyorOneDir02	ManualModeOverride	Device2	I2	Off	
AvConveyorOneDir02	AvtTripStatus	Device4	Q1	Off	On
AvConveyorTwoDir03	BypassCommand	Device4	I0	Off	
AvConveyorTwoDir03	LocalForwardCommand	Device4	I1	On	
AvConveyorTwoDir03	LocalReverseCommand	Device4	I2	Off	
AvConveyorTwoDir03	ManualModeOverride	Device4	I3	On	
AvConveyorTwoDir03	AvtStatusOverCTrip	Device4	Q0	Off	On
AvConveyorTwoDir03	AvtTripStatus	Device7	Q1	Off	On
AvConveyorTwoDir03	AvtStatusJamTrip	Device11	Q1	Off	On

Avatars

I/O View

Click the TeSys™ avatar you want to access. A new window opens, displaying the I/O view for the selected avatar.

NOTE: The information displayed for the avatar in the I/O View is based on the specific avatar.

Avatar I/O View



Force Mode

⚠WARNING

UNINTENDED EQUIPMENT OPERATION

- Before using Force mode, make sure that the forcing parameters or energizing loads will not result in unsafe conditions.

Failure to follow these instructions can result in death, serious injury, or equipment damage.

NOTE: Once Force mode is activated, commands from the digital tools take priority over commands from the PLC or Local until you exit Force mode.

Once the TeSys island is in the operational state, Force mode can be activated and deactivated using the OMT or TeSys island DTM.

Using Force Mode to Simulate Commands from the PLC

Force mode allows you to test the logic of any TeSys avatar by simulating receipt of commands from the PLC.

Simulating a PLC Command with Force Mode

Step	Action
1	Access Force mode: • To access Force mode using the OMT, navigate to the **Avatar View** panel and select an avatar. Click **I/O View**. The logic diagram for the selected avatar is displayed. • To access Force mode using the TeSys island DTM, click the **Diagnostics** tab and select an avatar from **Avatars**. Click **Status**. The logic diagram for the avatar is displayed.
2	To simulate receipt of a PLC command: • To simulate an Open command from the PLC, click **Force 0**. • To simulate a Close command from the PLC, click **Force 1**.
3	When finished, exit Force mode. See Exiting Force Mode, page 160.

Using Force Mode to Simulate Status Updates to the PLC

Force mode also allows you to simulate transmission of avatar status updates from the island to the PLC.

Simulating Avatar Status Updates from the Island to the PLC

Step	Action
1	Access Force mode from the OMT or TeSys island DTM as described in Simulating a PLC Command with Force Mode, page 159.
2	To simulate avatar status: • Click **Force 0** to simulate transmission of contactor Closed status to the PLC. • Click **Force 1** to simulate transmission of contactor Open status to the PLC.
3	When finished, exit Force mode. See Exiting Force Mode, page 160.

Using Force Mode to Simulate Status Changes of the Digital I/O Module Inputs and Outputs

Force mode also allows you to simulate status changes of the digital I/O module inputs and outputs. When force mode has not been applied, the status box is gray and shows Not Applied.

Status Box

Force Command	**Input From PLC**	**Status To PLC**
Force 0	Off	Off
Force 1	On	On

Step	Action
1	Access Force mode from the OMT or TeSys island DTM as described in Simulating a PLC Command with Force Mode, page 159.
2	To simulate I/O status, under **From PLC**: • Click **Force 0** to turn Off the digital output. • Click **Force 1** to Close the digital output status.
	Under **To PLC**: • Click **Force 0** to Close the digital input status. • Click **Force 1** to Open the digital input status.

Exiting Force Mode

To exit Force mode, perform the steps in the following table:

Exiting Force Mode

Step	Action
1	To exit Force mode using the TeSys island DTM, in the **Diagnostics** tab, click **Exit** next to **Force Mode**, and then confirm you wish to exit.
2	To exit Force mode from the OMT:
	Click the **Diagnostics** panel.
	Click the **Exit force mode** button. A hazard message pop-up window appears. Click **Yes** to confirm that you want to exit Force mode. The status banner at the top indicates that the system is no longer in Force mode.

Counters

To access the trip and alarm counters for the TeSys avatar, click the Counters tab in the Avatar window.

Avatar Counters View

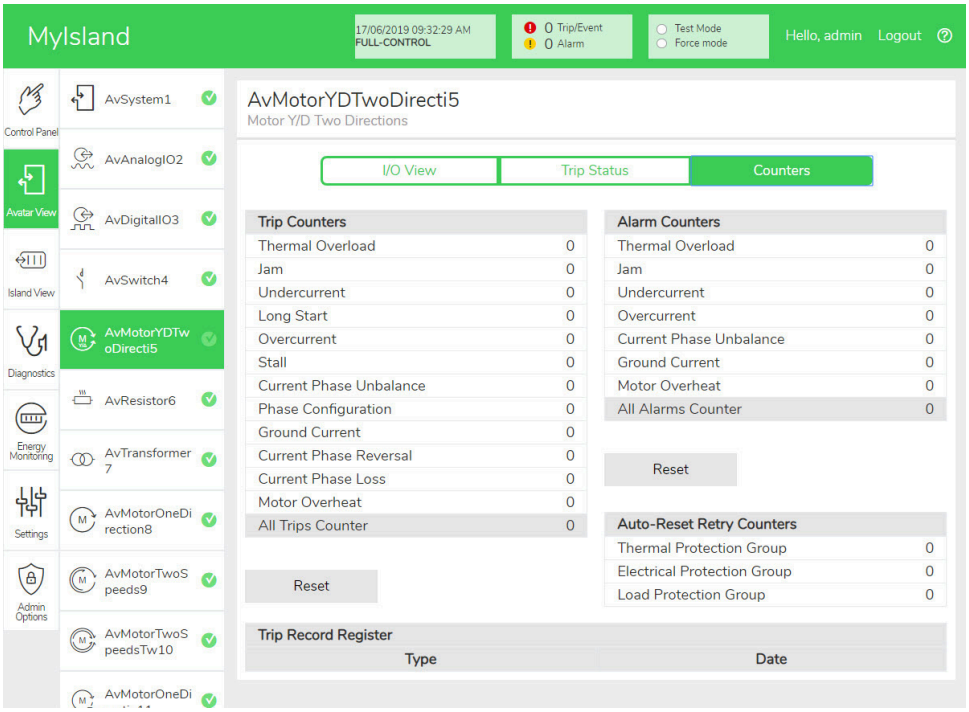

The following information is displayed for the avatar in the Counters view:

- Trip Counters
- Alarm Counters
- Auto Reset Counters
- Trip Record Register (last five trips)

To set the Trip or Alarm counters back to zero, click the Reset button.

Trip Status

To access the trip status for the TeSys avatar, click the **Trip Status** tab in the Avatar window.

Trip Status

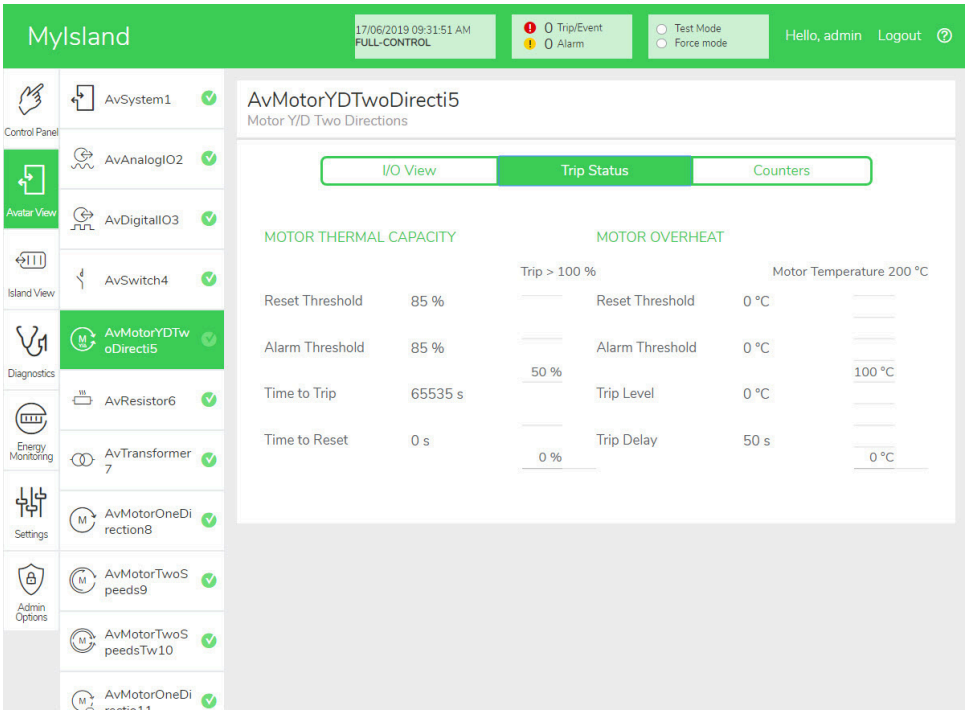

Island View Panel

The Island View panel displays status information for each device on the island.

- By clicking on a graphical representation of the device, you can obtain status information, including asset data and product identification.
- With the appropriate permissions, you can use Test mode.

Click the Island View panel to view a graphical representation of the island. The status of each device is displayed above the device on the island. A green circle with a check indicates that the device is in the ready state. A red alert symbol indicates that there is a device event on that physical device.

Island View

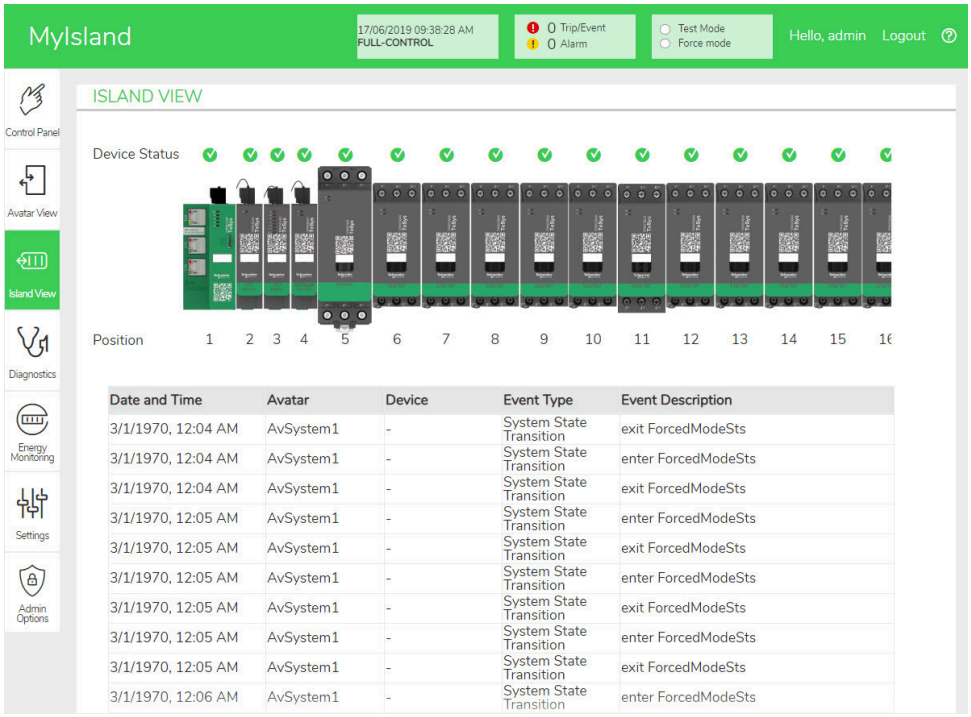

Device Events

If device events are present on the island:

- A red alert symbol appears in Island view above the devices that have experienced an event
- The LEDs on the physical devices flash red

Device Event

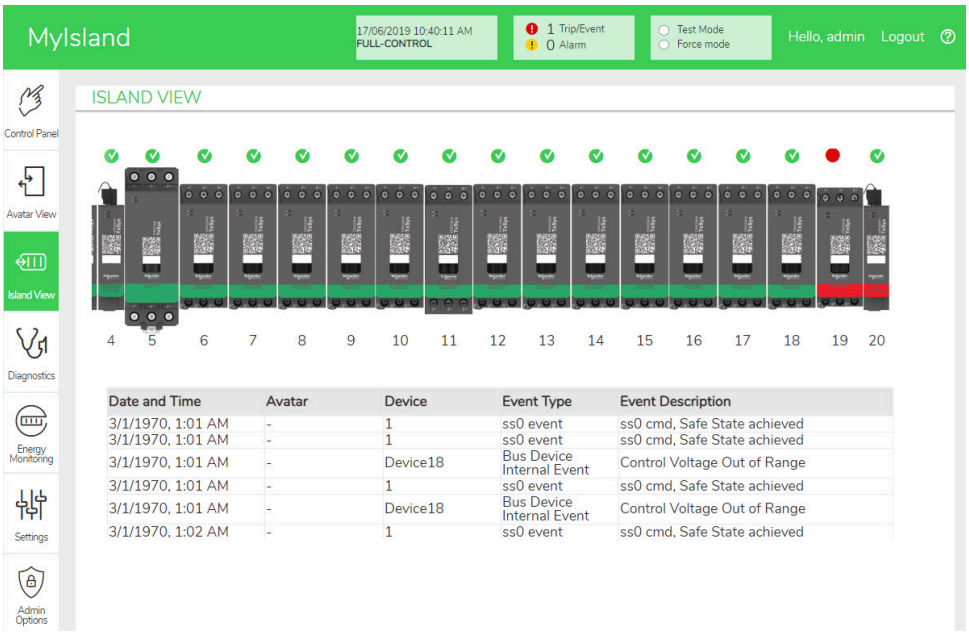

Event Log

The Event Log is located at the bottom of the Island View window. The following information is captured in the event log:

- Date and Time
- Avatar
- Device
- Event Type
- Event Description

Device Information

From Island View, you can click on each device in the island to view its status.

Bus Coupler

If you click the bus coupler in the island view, a new window displays the status of the bus coupler. The following information is provided for the bus coupler:

- **Device Status**
  - Name tag
  - Position
  - Commercial reference number
  - Status
  - Irms
  - Upstream voltage presence
- **Asset Data**
  - Number of device power cycles
  - Time device on
  - Number of events
- **Product Identification**
  - Vendor name
  - Vendor URL
  - Produce name
  - MAC address
  - Serial number
  - Vendor ID
  - Firmware version
  - Product code
- **Device Logs**
- **Locate Command**

Island View: Bus Coupler

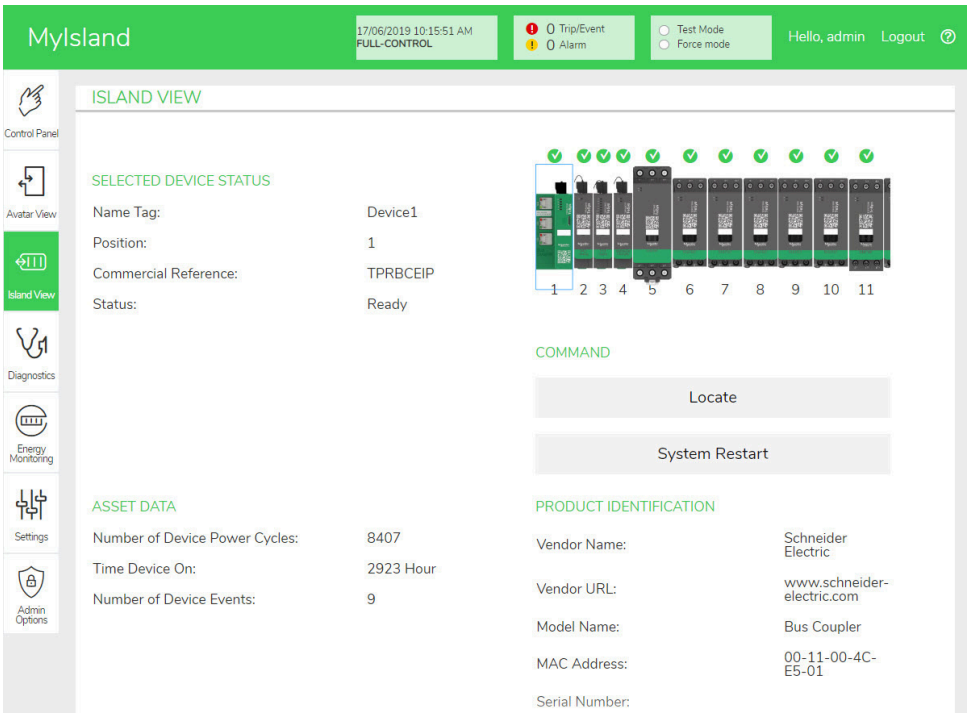

Locate Command

In Island View, click the Locate button to physically locate the connected island. The bus coupler's PWR LED illuminates a steady yellow for 5 s to help you identify which device the OMT is communicating with.

Starters and Power Interface Modules

To view the device status, click one of the starters or power interface modules in the island view. This action opens a new window displaying the status of the device. The following information is provided:

- **Device Status**
  - Name tag
  - Position
  - Commercial reference number
  - Status
  - Irms
  - Upstream voltage presence
- **Asset Data**
  - Number of device power cycles
  - Time device on
  - Number of device events
  - Time switch on (starter only)
  - Number of contactor cycles (starter only)
  - Maximum RMS current
  - Lifetime average RMS current
- **Product Identification**
  - Vendor name
  - Vendor URL
  - Model name
  - Serial number
  - Firmware version
  - Product code
- **Device Logs**
- Test Command

Island View: Devices

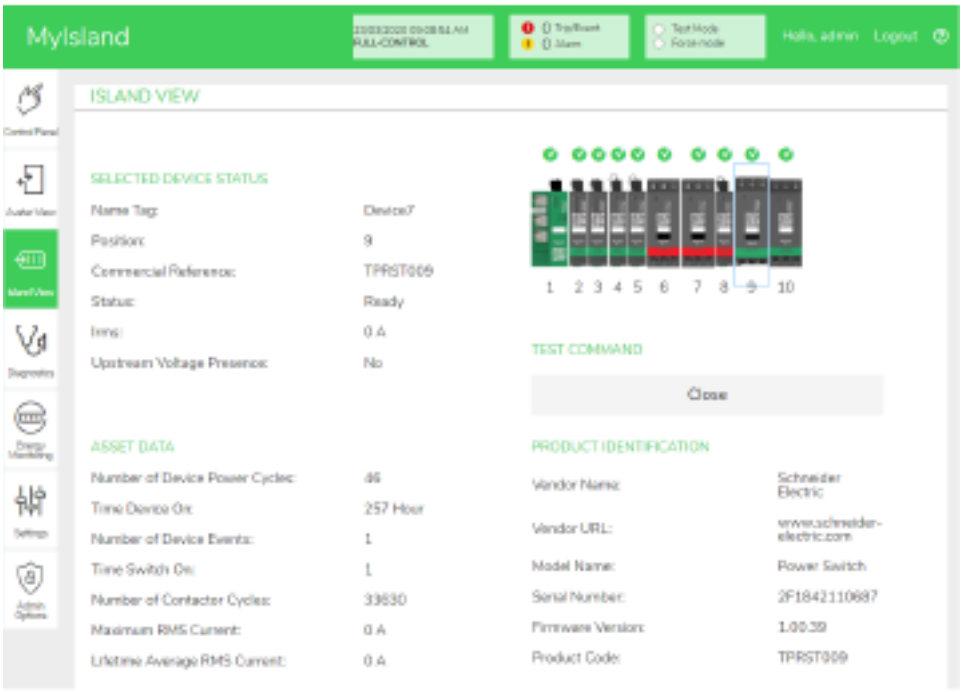

Test Mode

In Test mode, the Operation and Maintenance Tool (OMT) can directly control the power modules and the digital I/O modules. You can enter and exit Test mode during the pre-operational and operational states. In Test mode, the only TeSys avatar activated is the System avatar.

NOTE: Once you complete the Test mode activities, you must manually exit Test mode to return the island to the operational state.

To enter Test mode:

1. Under Test command, click the Close or Open command.
2. Click OK in the confirmation pop-up window to execute the Test command. This closes or opens the contactor or the device input.

Execute Test Command Confirmation

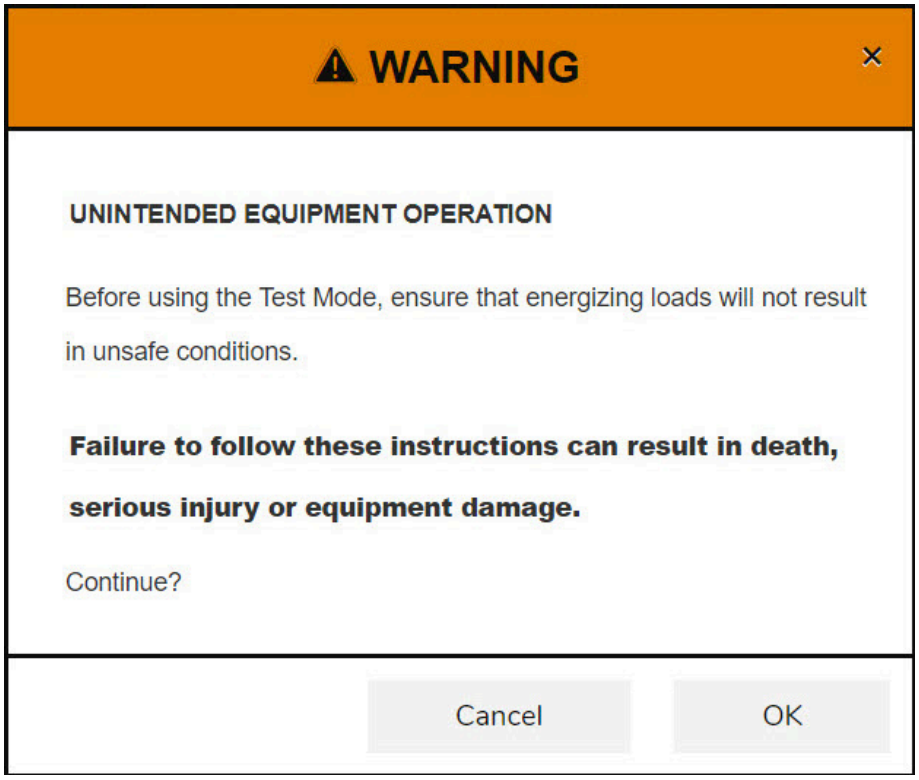

- You can click any device in the island topology and perform a test command.
- Once you have tested all devices, you must manually exit Test mode.

NOTE: To exit Test mode, see Exit Test Mode, page 168.

Diagnostics Panel

Exit Test Mode

Once you complete the Test mode activities, you must manually exit Test mode to return the island to the operational state:

1. Click the Diagnostics View panel.
2. Click the Exit Test Mode button.

Exit Test Mode

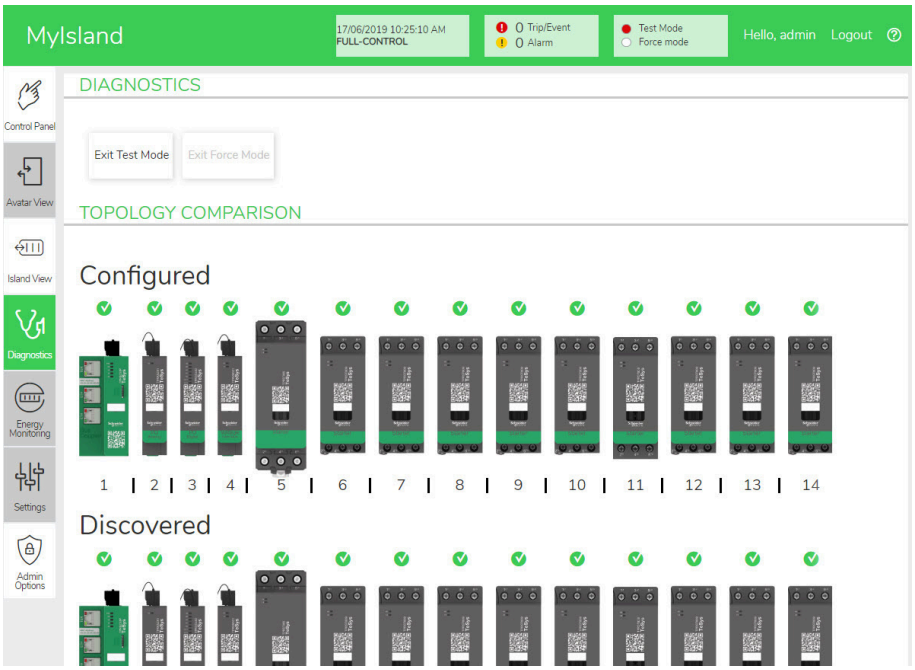

3. A pop-up appears. To confirm that you want to exit Test mode, click OK.

   NOTE: The status banner at the top does **not** indicate that the system is no longer in Test mode.

Exit Test Mode Confirmation

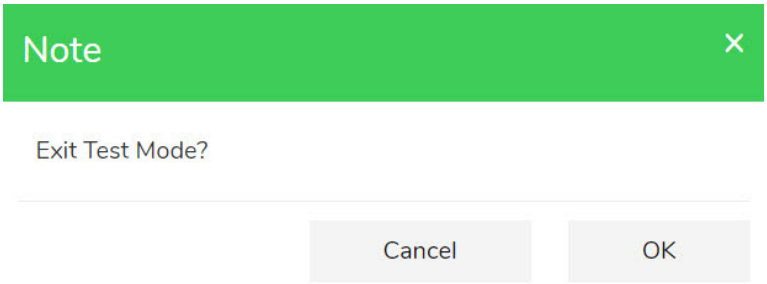

Exit Force Mode

Once you complete the Force mode activities, you must manually exit Force mode to return the island to the operational state:

1. Click the Diagnostics View panel.

2. Click the Exit Force mode button.

Exit Force Mode

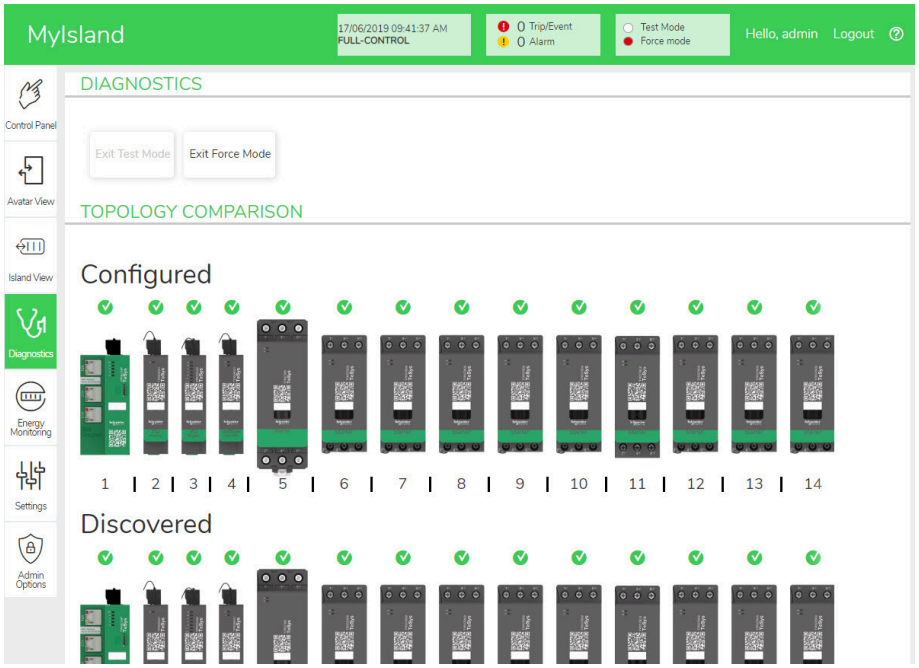

3. A pop-up appears. To confirm that you want to exit Force mode, click Yes.

Exit Force Mode Confirmation

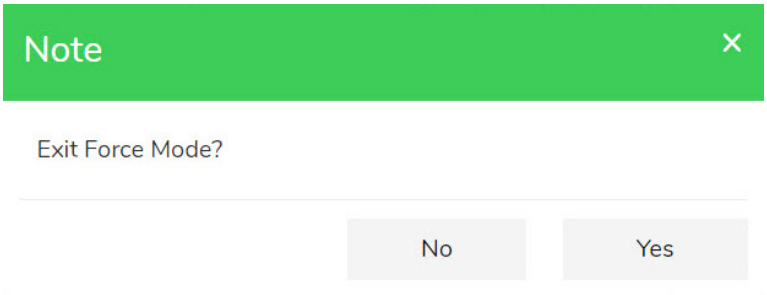

Compare Topology

This section describes how to compare the physical topology of the island against the island configuration file.

Energy Monitoring Panel

In the Energy Monitoring panel, you can access voltage monitoring, power monitoring, and energy monitoring for the system and for each TeSys™ avatar.

Voltage monitoring is only available for the System avatar. For the avatars, Time of Use is available for the Active Energy and Reactive Energy for up to four channels.

1. Click the Energy Monitoring panel.
2. Select the avatar.

In this panel, you can also reset any of the monitoring counters by clicking Reset.

Voltage Monitoring

System Voltage Monitoring

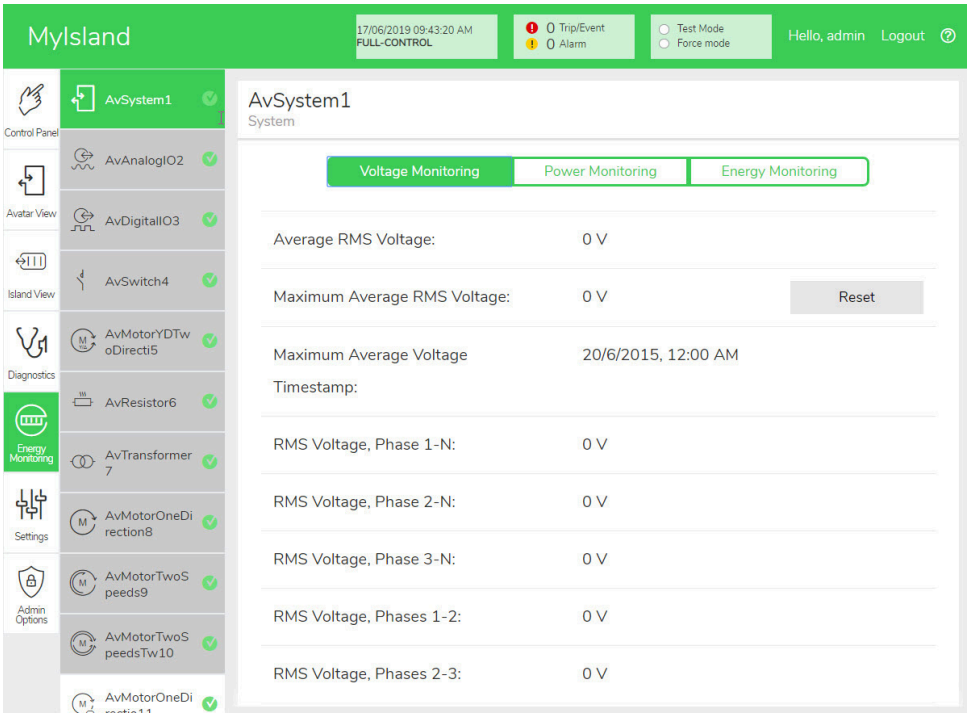

Power Monitoring

System Power Monitoring

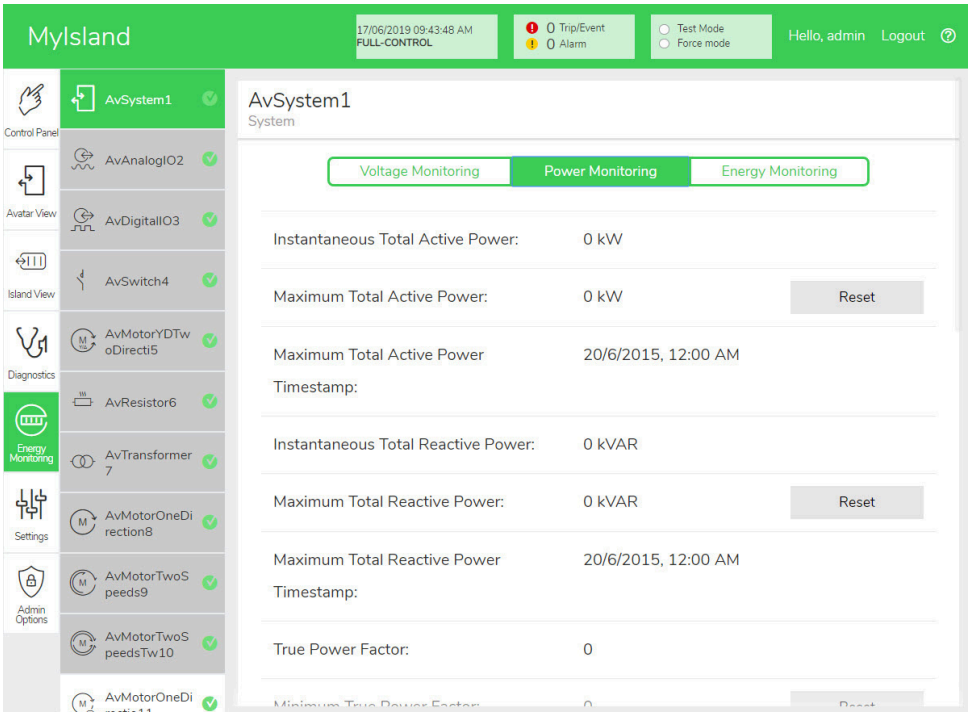

Energy Monitoring

The Time of Use window provides graphs showing the accumulated energy during the time each channel is enabled. Channels can be enabled or disabled via the Time of Use configuration window in the OMT or via the PLC. The four channels are independent of each other. The Time of Use configuration window in the OMT also allows you to preset energy data in these graphs.

System Energy Monitoring

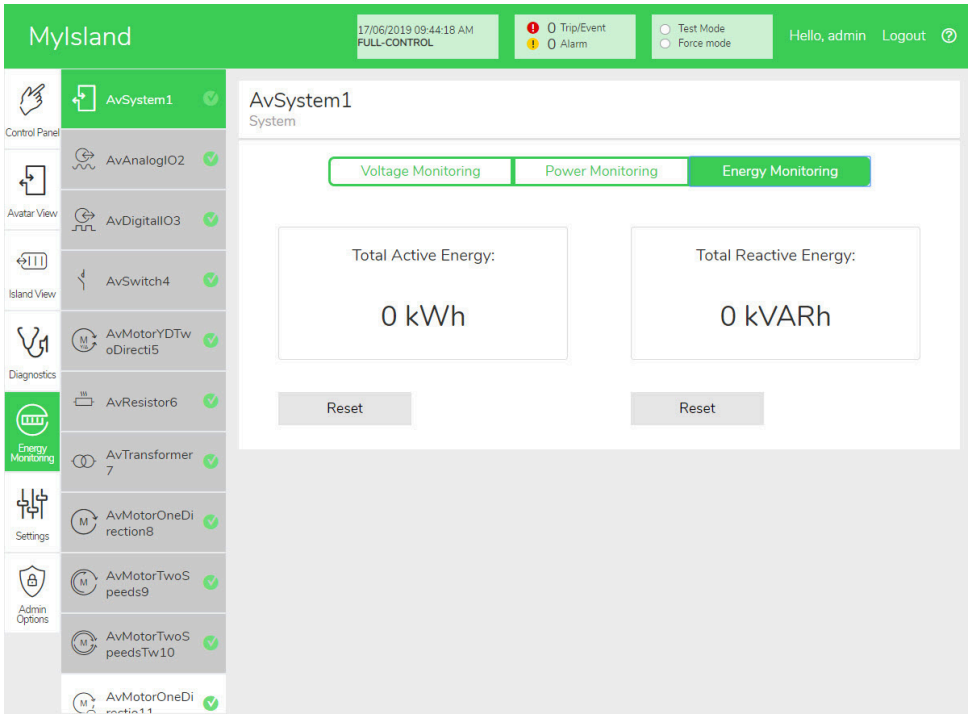

Time of Use

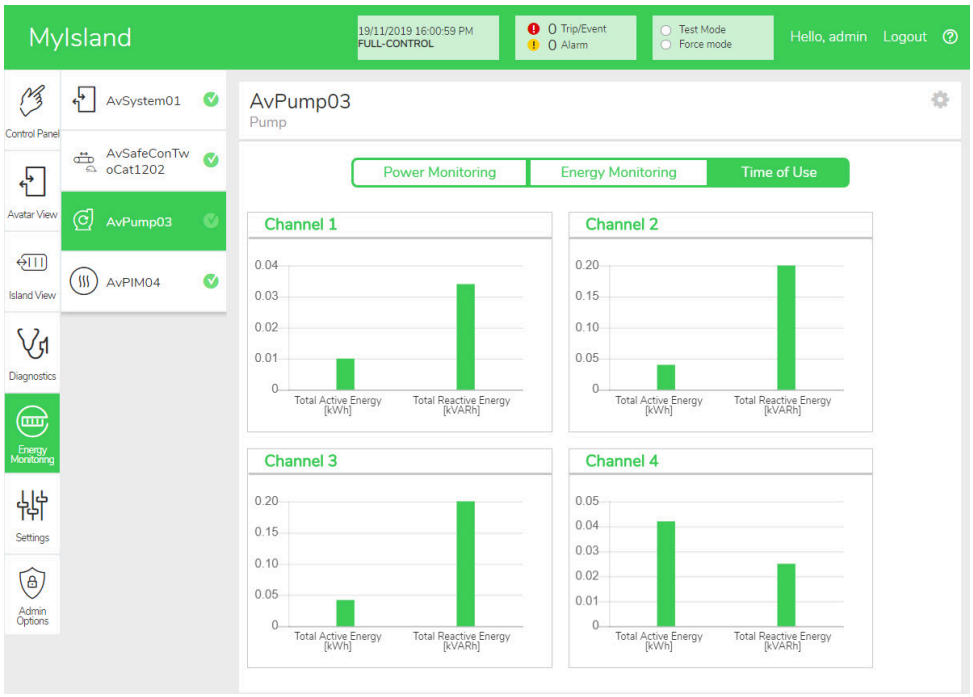

To access the settings in the Time of Use window for the avatar:

1. Click the wheel symbol in the top right corner to display the settings.
2. Change the values and click Set.
3. Close the window.

Active and Reactive Energy

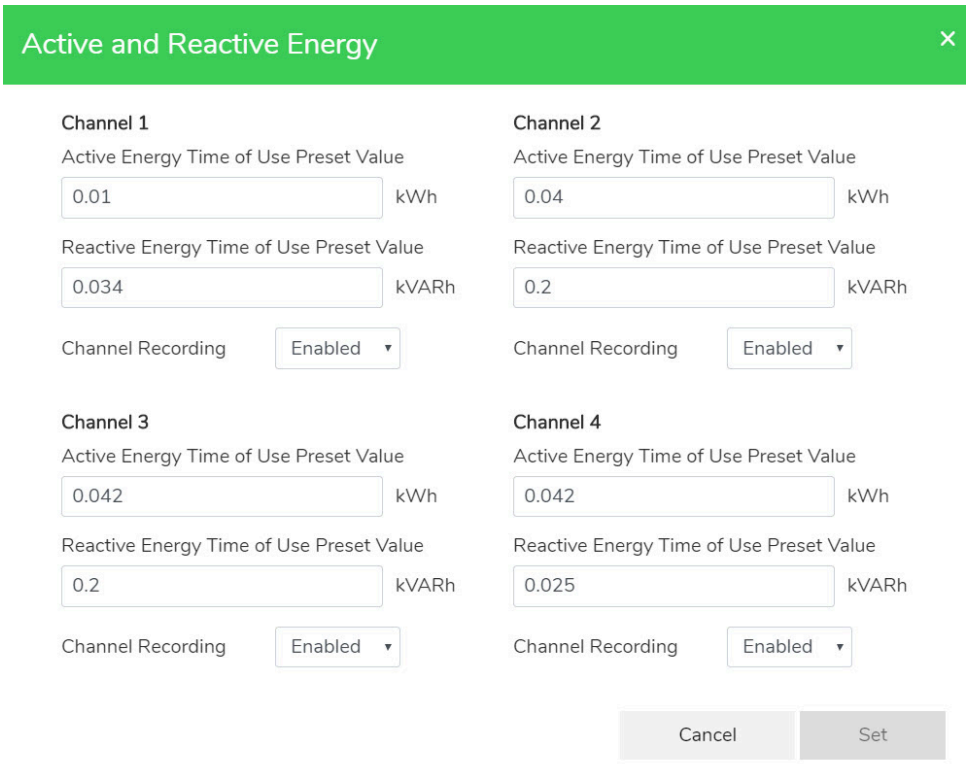

Settings Panel

The OMT can be used to view the system settings as well as individual TeSys™ avatar settings. If your OMT access level permits, you can also edit any of the system and individual avatar settings. Settings are configurable for the system, load, and device avatars to enable energy monitoring and to customize the avatar parameters.

For assistance in selecting the settings, refer to the DTM online help or the *TeSys™ island DTM Online Help Guide*, 8536IB1907. In the OMT tool, press F1 for help.

NOTE: TeSys GV devices should not be used with TeSys island for loads with trip classes set above trip class 15.

System

The following settings can be viewed and modified for the System avatar.

Fieldbus

- IP Address
- Subnet
- Gateway
- IPv6 Address
- IP Mode
- Network Name
- Communication Loss Timeout

  NOTE: For the definition of a communication loss, see Degraded Mode, page 40.

Fast Device Replacement (FDR)

- FDR Enable
- FDR Synchronization Enabled
- FDR Synchronization Period
- FDR Data Restore—Command
- FDR Data Backup—Command

System

- SD Log Update Period
- Force Mode Data Retention
- Test Mode Allowed
- Force Mode Allowed

Voltage

- Voltage Dip Threshold
- Voltage Swell Threshold

For more information on System settings, refer to the *TeSys™ island DTM Online Help Guide*, 8536IB1907.

Avatar

The following avatar settings can be viewed or modified. For more information on avatar settings, refer to the *TeSys™ island DTM Online Help Guide*, 8536IB1907.

General

- Control Mode
  - Control Mode Selection
- Combined PV Control (see Configuration below)
- FLA

Configuration

- PV Inputs
  - PV Input Control Source
  - PV Input Control Type
  - PV Input Control Level
  - PV Input Control Hysteresis
  - PV Input Control Logic

NOTE: The Input Source can only be accessed in the DTM.

Predictive Alarms

- Alarm Input
  - Type of Input
  - Alarm High Threshold Value
  - Alarm Low Threshold Value
- Alarm Definition
  - Type of Protection
  - PV Input Trigger
  - Alarm Message

Thermal protection

- Thermal Overload
  - Thermal Overload Trip
  - Trip Class
  - Reset Threshold
  - Motor Auxiliary Fan Cooled
  - Thermal Overload Alarm
  - Overload Alarm Level
- Motor Overheat
  - Motor Overheat Trip
  - Trip Delay
  - Trip Level
  - Reset Threshold
  - Motor Overheat Alarm
  - Alarm Threshold
  - Temperature Sensor

Electrical Protection

- Current Phase Loss
  - Trip
  - Trip Delay
  - Trip Level
- Ground Current Detection
  - Trip
  - Trip Delay
  - Trip Level
  - Alarm
  - Alarm Level
- Current Phase Unbalance
  - Trip
  - Trip Delay - Start
  - Trip Delay - Run
  - Trip Level
  - Alarm
  - Alarm Level
- Phase Reversal
  - Trip

Load Protection

- Jam
  - Trip
  - Trip Delay
  - Trip Level
  - Alarm
  - Alarm Level
- Long Start
  - Trip
  - Trip Delay
  - Trip Level
- Stall
  - Trip
  - Trip Delay
  - Trip Level
- Undercurrent
  - Trip
  - Trip Delay
  - Trip Level
  - Alarm
  - Alarm Level
- Overcurrent
  - Trip
  - Trip Delay
  - Trip Level
  - Alarm
  - Alarm Level
- Rapid Cycle Lockout
  - Lockout
  - Timeout
- Rapid Restart Lockout
  - Lockout
  - Timeout

Automatic Reset

- Thermal
- Electrical
- Load

Admin Options Panel

This section describes how the administrator can perform the following:

- add, modify, and delete other OMT users
- change the permissions assigned to each user group (see Groups, page 176)
- modify security settings

Click the arrow to expand the User Management section.

User Management

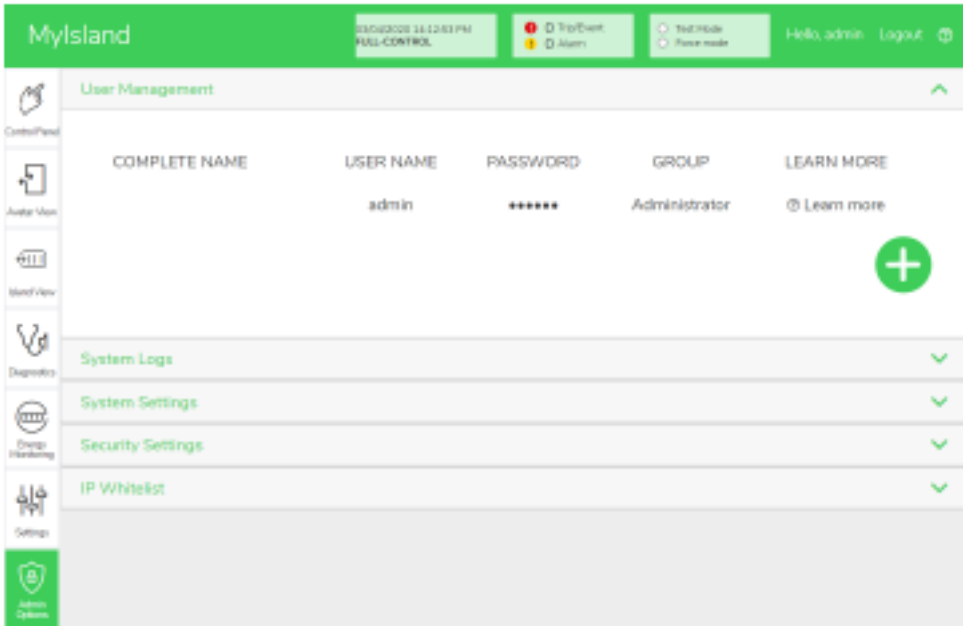

Groups

Each user is assigned to a group that defines the user's privileges for read and write access. Click Learn More in the User Management section to open the Access Management window. This window displays the available groups, and allows the administrator to select which panels and functions the group can access. See the figure below.

Access Management

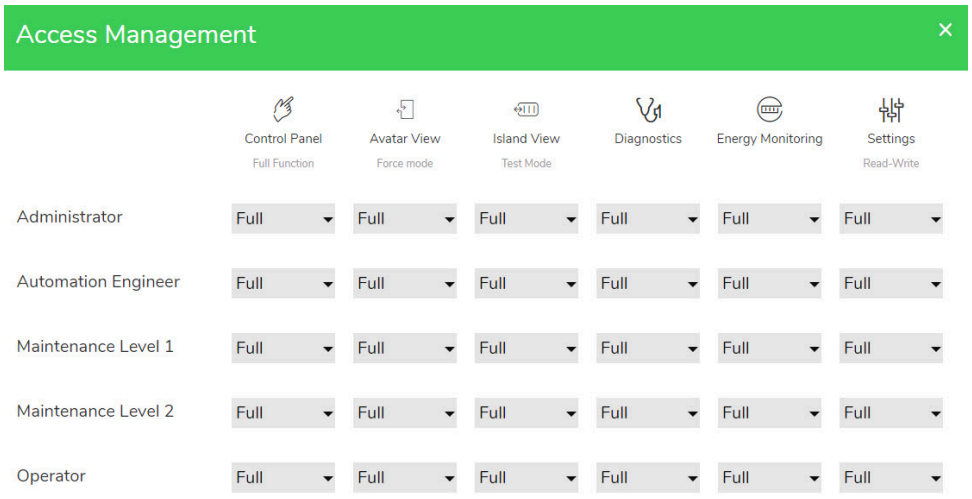

From the drop-down menus for each type of user, select which rights to assign for that panel. The options are:

- None
- Limited
- Full

You can select the options for the different types of user:

- Administrator
- Automation Engineer
- Maintenance Level 1
- Maintenance Level 2
- Operator

When all selections are complete, click the X in the top left of the Access Management window to close it.

Adding a New User

The administrator can add a new user to the OMT.

1. Click the green plus sign in the user Management section. The Add User window appears.

Add User

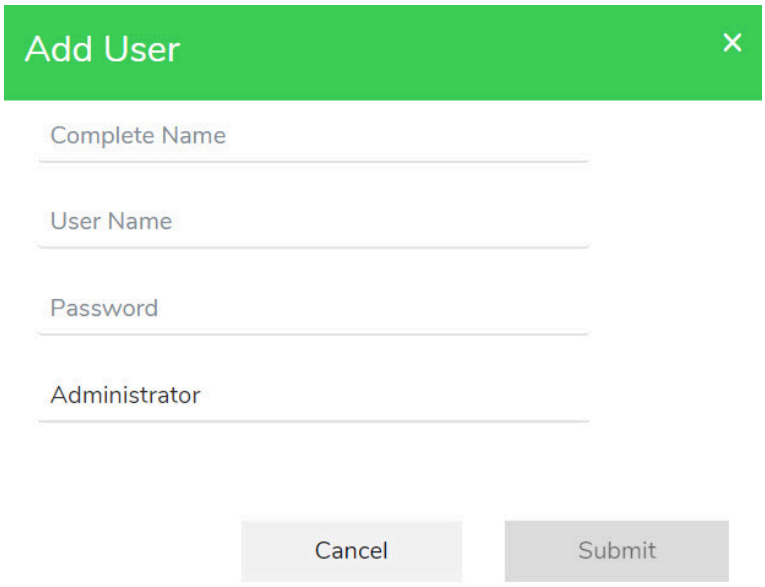

2. Enter the following information for the new user:
   - Complete Name
   - User Name
   - Password

3. Select the group to be assigned to the new user from the drop-down menu.
   - Administrator
   - Automation Engineer
   - Maintenance Level 1
   - Maintenance Level 2
   - Operator

Add User Drop-down Menu

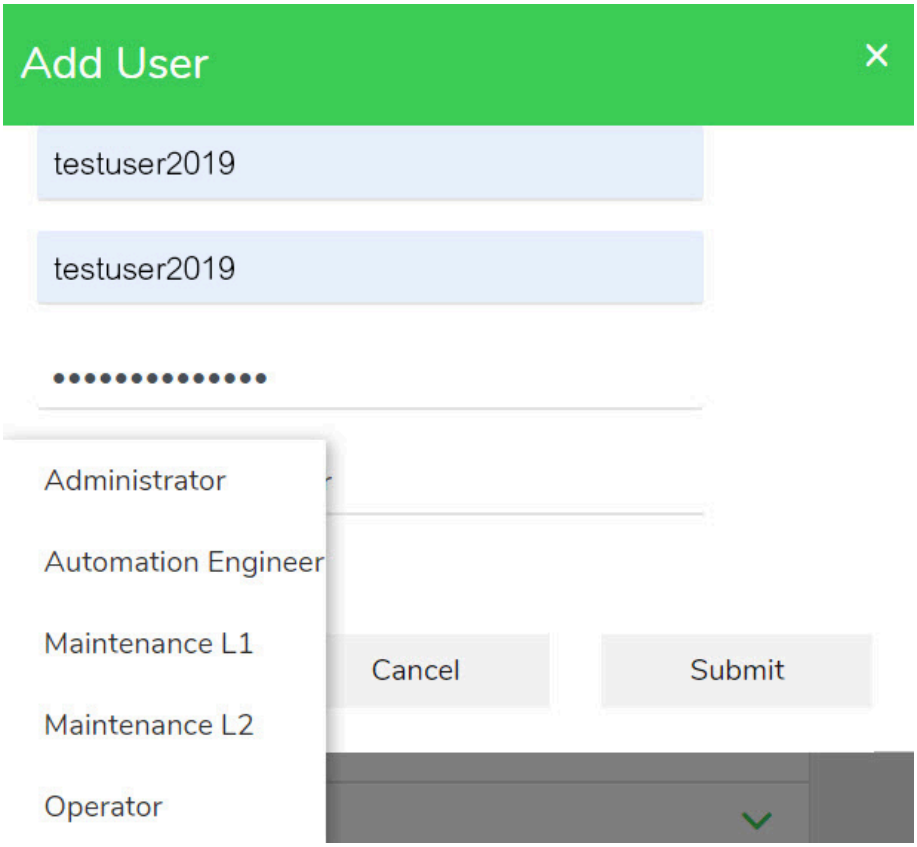

4. Click Submit.

Changing a User Information

The administrator can change the following credentials for each user:

- Complete Name
- User Name
- Password
- Group

1. Locate the user in the User Management window.
2. Click the user's information to make the necessary changes.

Deleting a User

To delete a user, navigate to the User Management section in the Admin Options panel. Click the black **X** to the far right of the user you wish to delete.

Deleting a User

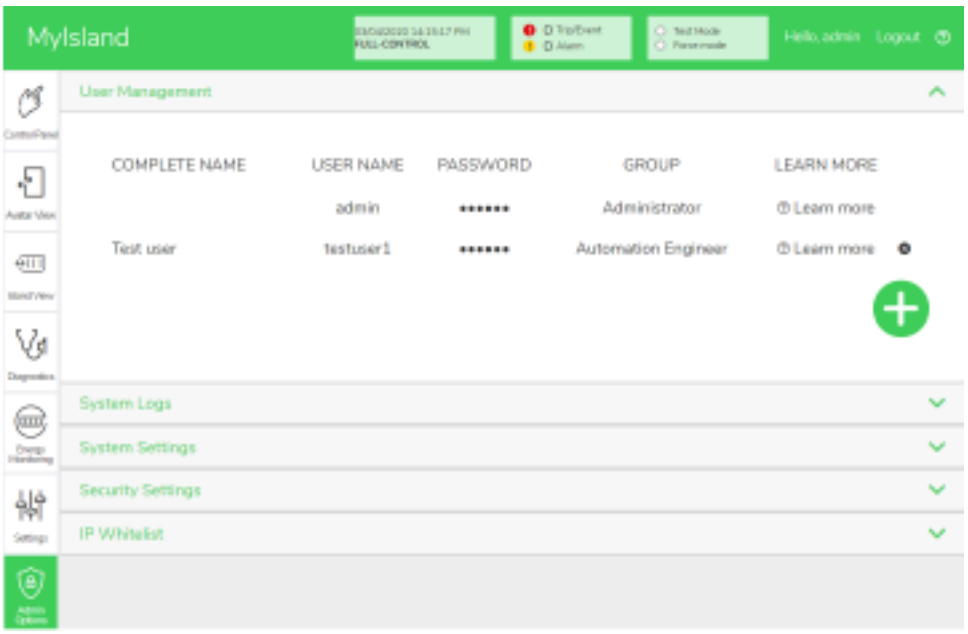

System Security

To modify the security settings for the system:

1. In the Admin Options panel, click the arrow to expand the Security Settings section.
2. Change the settings you wish to modify.
3. Click Save.

Security Settings

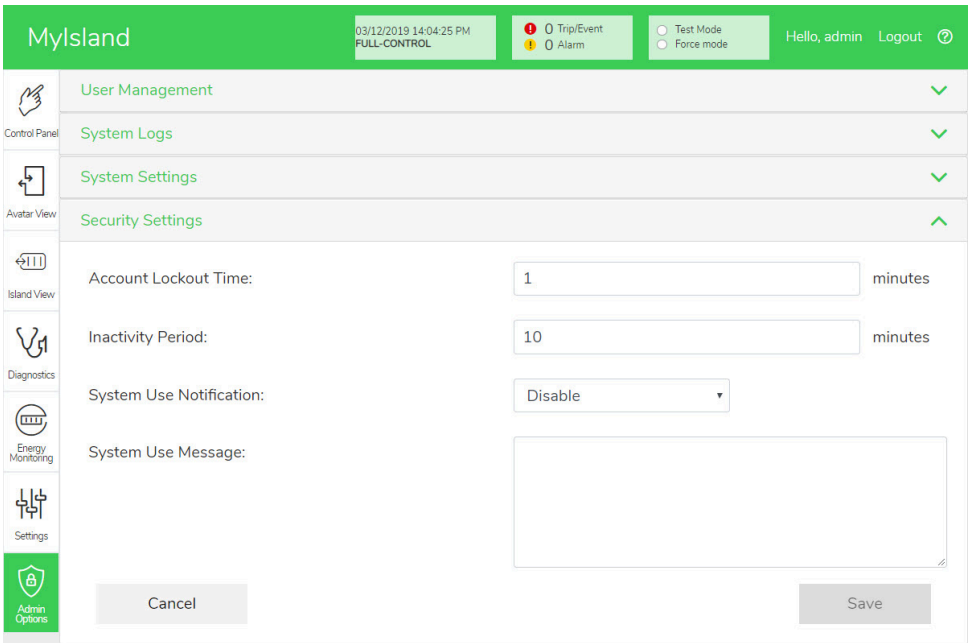

IP Allowlist

IP Allowlist enables you to configure an Access Control List (ACL) of IP addresses that are allowed to communicate with the bus coupler.

To enable and set the IP Allowlist settings for the system, do the following:

1. In the Admin Options panel, click the arrow to expand the IP Allowlist.
2. Change the IP Allowlisting setting to Enable.
3. Click the plus sign to add a new IP address.
4. Enter the IP Address and Netmask.
5. Click Save.

IP Allowlist

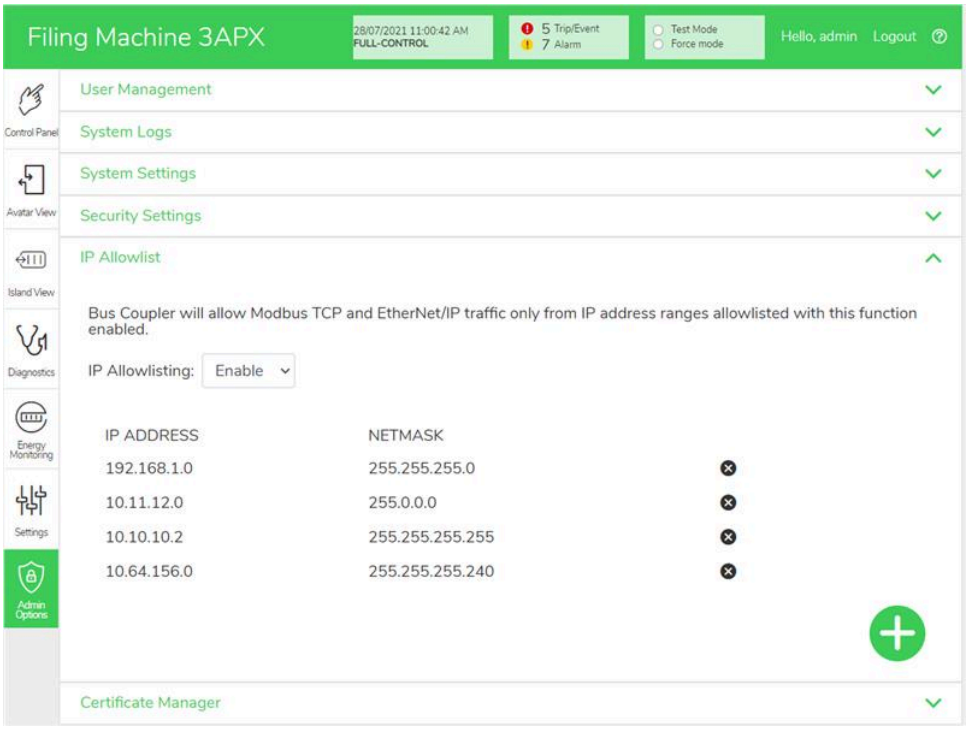

Certificate Manager

Certificate Manager allows you to configure security certificate to the TeSys island.

The user-supplied certificates can be only deleted. Once the certificate is deleted, the TeSys island assigns the self-signed certificate by default.

Self-signed certificate cannot be deleted and it can only be overridden by the user-supplied certificate.

To upload the certificate, do the following:

1. In the **Admin Options** panel, click the arrow to expand the **Certificate Manager**.
2. In the **Upload Certificate** window, click **Choose File** to select the .p12 certificate.
3. Enter the certificate password and click **Submit**.

   NOTE:

   - For certificate without password, leave the password field empty.
   - To support secure communications with HTTPS, the certificate must be imported in the browser of the PC.

Certificate Manager

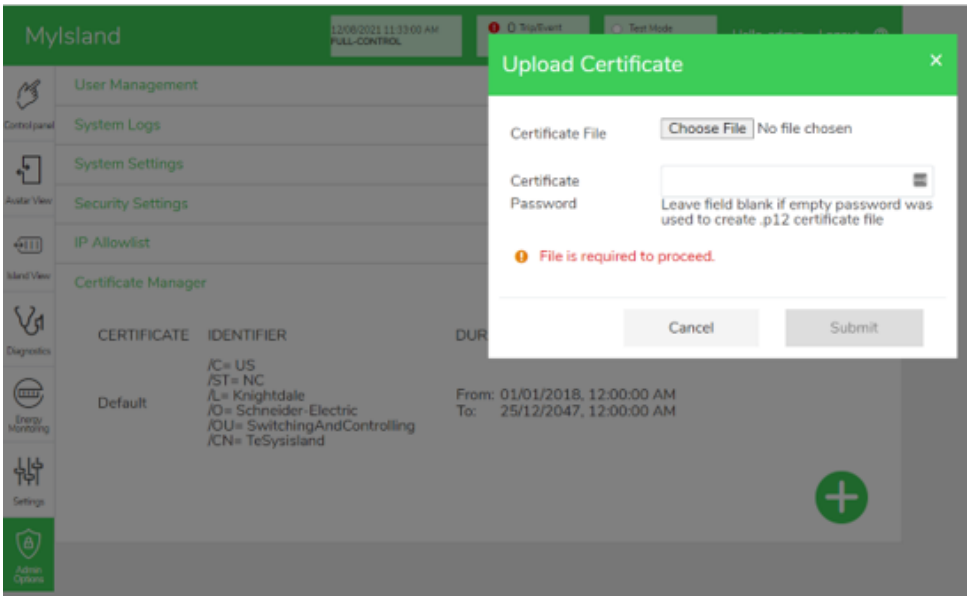

Powering On the island

To power on the island:

1. Energize the bus coupler with 24 V.

   The island enters the pre-operational stage. Once it finishes booting and all settings have been applied, the island enters the operational state.

   NOTE: You can enter and exit Test mode using the digital tools throughout the pre-operational and operational states.

2. Verify that the PWR LED is illuminated and shows a steady green, indicating that power is applied and the island is operational.

EtherNet/IP™ Bus Coupler

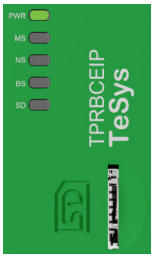

PROFINET® Bus Coupler

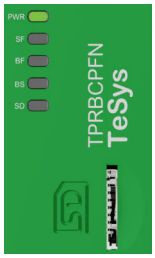

PROFIBUS® Bus Coupler

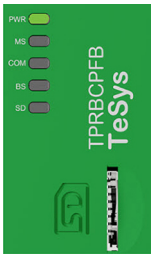

Powering Off the island

To de-energize the bus coupler:

1. Disconnect upstream power to the island by removing the 24 V connection to the bus coupler.
2. Verify that the PWR LED on the bus coupler is off.

When the bus coupler is de-energized, the following occurs:

- All power modules (standard starters, SIL(38) starters, and power interface modules) and I/O modules enter the Off condition
- All modules are de-energized
- All contactors are set to open
- All outputs from the I/O modules are set to zero

(38) Safety Integrity Level according to standard IEC 61508.

Module LEDs

What’s in This Part

This section describes the LED status of all modules available for TeSys™ island.

Bus Coupler LEDs

TPRBCEIP EtherNet/IP™ Bus Coupler LEDs

LED	Color	State	Description
PWR	**Dual LED, Yellow/Green**		
	Yellow	Static	System is booting.
	Green	On	Operating system running.
	Off	Off	Power supply for the device is missing, or hardware is not operational.
	Yellow	Static (5 s)	Identification of the connected bus coupler following a Locate command. Other LED behavior is overridden for 5 s.
	Yellow	Flashing	System is in Force Mode.
MS Name in the device drawing: **COM 0**	**Dual LED, Red/Green**		
	Green	On	**Device operational**: The device is operating correctly.
	Green	Flashing	**Standby**: The device has not been configured.
	Red	On	**Major event**: The device has detected a non-recoverable major event.
	Red	Flashing	**Minor event**: The device has detected a recoverable minor event. **NOTE:** • An incorrect or inconsistent configuration is a minor event. • The avatar device event will not be displayed in MS LED status.
	Red/Green	Flashing	**Self-test**: The device is performing its power-up testing.
	Off	Off	**No power**: No power is supplied to the device.
NS Name in the device drawing: **COM 1**	**Dual LED, Red/Green**		
	Green	On	**Connected**: The device has at least one established connection (even to the message router).
	Green	Flashing	**No connections**: The device has no established connections but has obtained an IP address.
	Red	On	**Duplicate IP**: The device has detected that its IP address is already in use.
	Red	Flashing	**Connection timeout**: One or more of the connections targeting this device has timed out. This condition is cleared only if all timed out connections are reestablished or if the device is reset.
	Red/Green	Flashing	**Self-test**: The device is performing its power-up testing.
	Off	Off	**Not powered, no IP address**: The device does not have an IP address, or is powered off.
LINK/RJ45 ETH and TER Ports	**LED, Green**		
	Green	On	The device is connected to the Ethernet network.
	Off	Off	The device is *not* connected to the Ethernet network.
ACT/RJ45 ETH and TER Ports	**LED, Yellow**		
	Yellow	Flashing	The device is sending or receiving Ethernet frames.
BS/ERR	Black	Off	No connection to internal bus.
	Blinking green	On with COM	Connection / communication to internal bus.
	Steady green	On	Connection to internal bus.

TPRBCPFN PROFINET® Bus Coupler LEDs

LED	Color	State	Description
PWR	**Dual LED, Yellow/Green**		
	Yellow	Static	System is booting.
	Green	On	Operating system is running.
	Green	Flashing (3 s)	The bus coupler received a DCP signal command from the PROFINET network.
	Off	Off	The power supply for the device is missing, or the hardware is not operational.
	Yellow	Static (5 s)	Identification of the connected bus coupler following a Locate command. Other LED behavior is overridden for 5 s.
	Yellow	Flashing	The system is in Force mode.
SF Name in the device drawing: **COM 0**	**Dual LED, Red/Green**		
	Red	On	The system transitions to the status, Major Event State Active (problem indicator within a Diagnosis alarm).
	Red	Flashing (3 s)	The DCP service is being initiated.
	Off	Off	No system errors and no ongoing DCP configuration.
BF Name in the device drawing: **COM 1**	**Dual LED, Red/Green**		
	Red	On	No configuration; or low speed physical link; or no physical link.
	Red	Flashing	No data exchange.
	Off	Off	—
LINK/RJ45 PFN and TER Ports	**LED, Green**		
	Green	On	The device is connected to the Ethernet network.
	Off	Off	The device is *not* connected to the Ethernet network.
ACT/RJ45 PFN and TER Ports	**LED, Yellow**		
	Yellow	Flashing	The device is sending or receiving Ethernet frames.
BS/ERR	Black	Off	No connection to internal bus.
	Blinking green	On with COM	Connection / communication to internal bus.
	Steady green	On	Connection to internal bus.

TPRBCPFB PROFIBUS® Bus Coupler LEDs

LED	Color	State	Description
PWR	**Dual LED, Yellow/Green**		
	Yellow	Static	System is booting.
	Green	On	Operating system is running.
	Off	Off	Power supply for the device is missing, or hardware is not operational.
	Yellow	Static (5 s)	Identification of the connected bus coupler following a Locate command. Other LED behavior is overridden for 5 s.
	Yellow	Flashing	The system is in Force mode.
MS Name in the device drawing: **COM 0**	**Dual LED, Red/Green**		
	Green	On	**Device operational**: The device is operating correctly.
	Green	Flashing	**Standby**: The device has not been configured.
	Red	On	**Major event**: The device has detected a non-recoverable major event.
	Red	Flashing	**Minor event**: The device has detected a recoverable minor event. **NOTE:** An incorrect or inconsistent configuration is a minor event.
	Red/Green	Flashing	**Self-test**: The device is performing its power-up testing.
	Off	Off	**No power**: No power is supplied to the device.
COM Name in the device drawing: **COM 1**	**Dual LED, Red/Green**		
	Green	On	Cyclic communication.
	Red	Flashing (cyclic)	No communication—connection error.
	Red	Flashing (acyclic)	Not configured.
	Off	Off	—
LINK/RJ45 TER Port	**LED, Green**		
	Green	On	The device is connected to the Ethernet network.
	Off	Off	The device is *not* connected to the Ethernet network.
ACT/RJ45 TER Port	**LED, Yellow**		
	Yellow	Flashing	The device is sending or receiving Ethernet frames.
BS/ERR	Black	Off	No connection to internal bus.
	Blinking green	On with COM	Connection / communication to internal bus.
	Steady green	On	Connection to internal bus.

Visual LED for SD Card

LED color status (Green/Red)	System status	Description
Steady Off	None	System power is off.
Green, Steady On	Normal	Data files on the memory card used for FDR are identical with data files on the device.
Green, Blinking	Data exchanges	Read data from the SD card or write data on the SD card.
Red, Blinking	Alarm—SD Card Event	Data files on the memory card used for FDR are not identical with data on the device after update. SD card cannot be read or written, or SD card is missing.
Red, Steady On	Minor event	2 project files on the SD card.

Starters and Power Interface Module (PIMs)

Device Status is the top LED on all TeSys island modules except the bus coupler.

Device Status LED

Indicator State	Summary	Description
Single Flash Green/Red	LED Diagnostic	Visual indication that LEDs are operational.
Steady Off	Off	Module not energized.
Steady Red	Device Major Event	Internal device event.
Flashing Red	Not Ready	Discovery, addressing, firmware update, Device Minor Event, etc.
Steady Green	Ready, Closed	Module is ready, and the contactor switch is closed.
Flashing Green	Ready, Open	Module is ready, and the contactor switch is open.

Load Status is the second LED on starters and PIMs.

Load Status LED

Indicator State	Summary	Description
Single Flash Green/Red	LED Diagnostic	Visual indication that LEDs are operational.
Steady Off	Off/Not Ready	Module not energized or not ready.
Flashing Green/Red	Test mode	System Test state is activated.
Steady Red	Protection Trip	Avatar Protection Trip.
Flashing Red	Protection Alarm	Avatar Protection Alarm.
Flashing Green	Upstream Voltage	No upstream voltage presence detected.
Steady Green	Normal	Load is operating within normal conditions.

Voltage Interface Module (VIM)

Device Status is the top LED on all TeSys island modules except the bus coupler.

Device Status LED

Indicator State	Summary	Description
Single Flash Green/Red	LED Diagnostic	Visual indication that LEDs are operational.
Steady Off	Off	Module not energized.
Steady Red	Device Major Event	Internal device event.
Flashing Red	Not Ready	Discovery, addressing, firmware update, Device Minor Event, etc.
Steady Green	Ready	Module is ready.

Voltage Status is the second LED on the VIM.

Voltage Status LED

Indicator State	Summary	Description
Single Flash Green/Red	LED Diagnostic	Visual indication that LEDs are operational.
Steady Off	Off	Module not energized or not ready.
Flashing Green	Ready, No Voltage	Ready with no voltage detected.
Steady Green	Ready, Voltage	Ready with voltage detected.

SIL Interface Module (SIM)

NOTE: Safety Integrity Level according to standard IEC 61508.

Device Status is the top LED on all TeSys island modules except the bus coupler.

Device Status LED

Indicator State	Summary	Description
Single Flash Green/Red	LED Diagnostic	Visual indication that LEDs are operational.
Steady Off	Off	Module not energized.
Steady Red	Device Major Event	Internal device event.
Flashing Red	Not Ready	Discovery, addressing, firmware update, Device Minor Event, etc.
Steady Green	Ready	Module is ready.

SIL Status LED

Indicator State	Description
Single Flash Green/Red	Visual indication that LEDs are operational.
Steady Off	Module not energized or not ready.
Steady Green	No SIL Group Stop command.
Flashing Green	Successful SIL Group Stop command, not yet in SIL Stop State.
Flashing Red	Successful SIL Group Stop command, but indicative of a wiring issue. SIL Stop State achieved.
Steady Red	Successful SIL Group Stop command. SIL Stop State achieved.

Digital I/O Module (DIOM)

Device Status is the top LED on all TeSys island modules except the bus coupler.

Device Status LED

Indicator State	Summary	Description
Single Flash Green/Red	LED Diagnostic	Visual indication that LEDs are operational.
Steady Off	Off	Module not energized.
Steady Red	Device Major Event	Internal device event.
Flashing Red	Not Ready	Discovery, addressing, firmware update, Device Minor Event, etc.
Steady Green	Ready	Module is ready.

DIOM Status LEDs

Indicator State	Summary	Description
Single Flash Green	LED Diagnostic	Visual indication that LEDs are operational.
Steady Off	Off	Module not energized.
Steady Off	Not Ready	Discovery, addressing, firmware update, Device Minor Event, etc.
Steady Off	I/O channel not active	Ready and I/O channel not active.
Steady Green	I/O channel active	Ready and I/O channel active.

Analog I/O Module (AIOM)

Device Status is the top LED on all TeSys island modules except the bus coupler.

Device Status LED

Indicator State	Summary	Description
Single Flash Green/Red	LED Diagnostic	Visual indication that LEDs are operational.
Steady Off	Off	Module not energized.
Steady Red	Device Major Event	Internal device event.
Flashing Red	Not Ready	Discovery, addressing, firmware update, Device Minor Event, etc.
Steady Green	Ready	Module is ready.

Updating the Firmware on the Bus Coupler

Use this procedure to update the firmware on the bus coupler using a micro SD card.

NOTE: Consult the release notes to check the compatibility of the new firmware with the existing function block libraries or DTM configurations. For major firmware updates, you may need to update the configuration and update the DTM from the Schneider Electric website.

1. Download the firmware to your local PC. The firmware is delivered as an .SEDP file.
2. Insert the micro SD card into your PC.
3. Create a new folder on the micro SD card called *update*. Open the *update* folder.
4. Inside the *update* folder, create a new folder called *dlvpkg*. Open the *dlvpkg* folder.
5. Transfer the .SEDP file from your PC to the following location on the micro SD card:
   update/dlvpkg/xxxxxxx.SEDP
6. Remove the micro SD card from your PC and insert it into the bus coupler.

   The bus coupler starts the firmware upgrade and automatically reboots in about two minutes.

Device Replacement

What’s in This Part

This section describes the device replacement for TeSys™ island.

Bus Coupler Replacement

⚠⚠DANGER

HAZARD OF ELECTRIC SHOCK, EXPLOSION, OR ARC FLASH

Turn off all power before working on or inside the equipment.

Failure to follow these instructions will result in death or serious injury.

You can only replace the bus coupler with another bus coupler having the same reference number (TPRBCEIP). You must configure the replacement bus coupler on the Ethernet network with the same settings as the original.

Three options exist to configure the new bus coupler's settings:

- Micro SD card

  If the island’s configuration has been saved to a removable micro SD card, insert the card into the new bus coupler.

- FDR server

  If a micro SD card is not available or cannot be read or written, load the island configuration into the replacement bus coupler using FDR and a Schneider Electric™ PLC.

- SoMove project file

  If the prerequisites are not met for the previous options, save the bus coupler’s configured settings to a SoMove project file. Then, use SoMove software with the TeSys island DTM to transfer the configuration to the replacement bus coupler.

Consider the following before replacing the bus coupler:

- Is the replacement device the same model as the original?
- Is a micro SD card available?
- If the PLC is Schneider Electric brand, has the FDR server functionality been enabled and setup?
- Is a SoMove project available for configuration?

Micro SD Card

Use this option to replace the bus coupler if there is a micro SD card installed in the existing bus coupler.

Prerequisite: This option is valid only to replace a bus coupler which has stored data on a micro SD Card (that is, the SD Card visual indicator on the Bus Coupler being replaced has been in the Green, Steady On state).

⚠⚠DANGER

HAZARD OF ELECTRIC SHOCK, EXPLOSION, OR ARC FLASH

Turn off all power before working on or inside the equipment.

Failure to follow these instructions will result in death or serious injury.

1. Disconnect all power from the island.
2. Remove the micro SD card from the existing bus coupler.
3. Insert the micro SD card into the replacement bus coupler.
4. Remove the existing bus coupler from the DIN rail and install the replacement module by following the instructions in Installing the Bus Coupler, page 100 in the *TeSys island Installation Guide*.

5. Apply power to the island, initiating the boot process. Observe the LEDs on the bus coupler until they turn green, indicating that the island has entered the operating state. The boot process takes about two minutes.

FDR Server

Prerequisites:

- The PLC must be Schneider Electric™ brand.
- The FDR server must be setup on the PLC.
- The Ethernet Services FDR settings must be enabled in the TeSys island DTM

  NOTE: This option is recommended only when the micro SD card is not used or if the SD Card cannot be read or written.

⚠⚠DANGER

HAZARD OF ELECTRIC SHOCK, EXPLOSION, OR ARC FLASH

Turn off all power before working on or inside the equipment.

Failure to follow these instructions will result in death or serious injury.

When replacing only the bus coupler in an existing installation, you can replace the bus coupler directly—without the need to use the OMT to retrieve information from the existing bus coupler, or to enter information onto the replacement bus coupler. When replacing **only** the bus coupler, Steps 1, 2, and 6 are not required.

1. Connect to the existing bus coupler via the OMT to obtain its Network Name.
   a. Click the Settings icon.
   b. Click the System avatar.
   c. Click Fieldbus Settings.

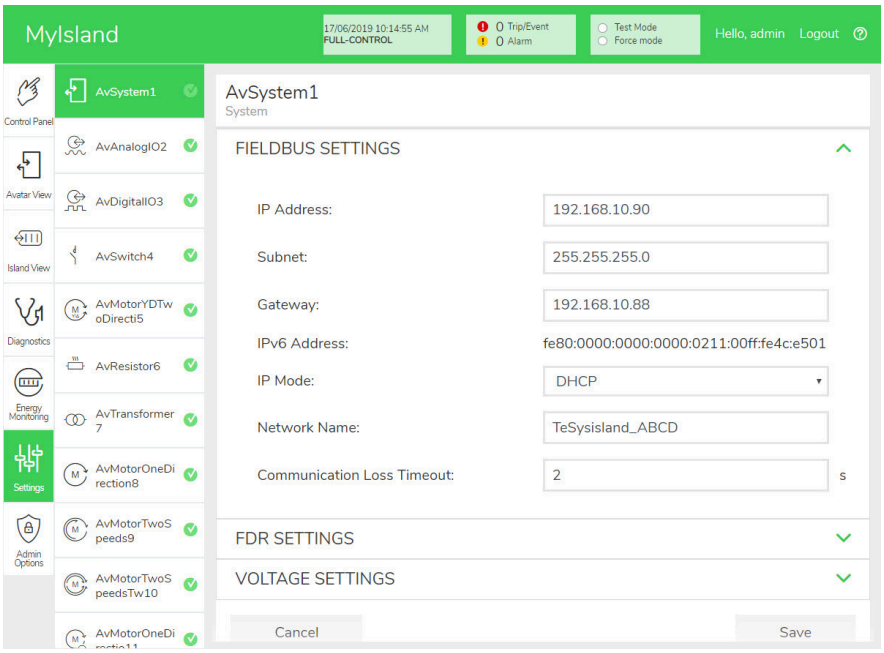

2. Capture the Network Name of the existing bus coupler. You will need it when configuring the replacement bus coupler.
3. Disconnect all power from the island.
4. Remove the existing bus coupler from the DIN rail and install the replacement module by following the instructions in Installing the Bus Coupler, page 100 in the *TeSys island Installation Guide*.
5. Apply power to the island, initiating the boot process. Observe the LEDs until they turn green, indicating that the island has entered the operating state. The boot process takes about two minutes.

6. Connect via the OMT and set the Network Name of the replacement bus coupler as follows:
   a. Click the Settings icon.
   b. Click the System avatar.
   c. Click Fieldbus Settings

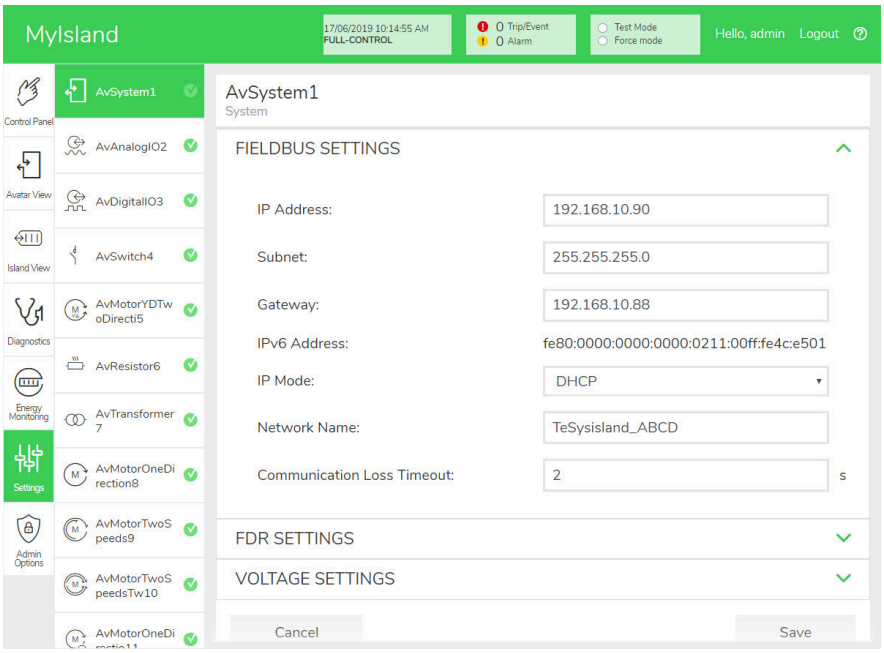

   d. Enter the Network Name of the bus coupler. This must be the same Network Name that was assigned to the bus coupler being replaced.
   e. Click Save.
   f. Click the Control Panel icon.
   g. Click Restart System. A dialog is displayed. Observe the indicated precautions before continuing.

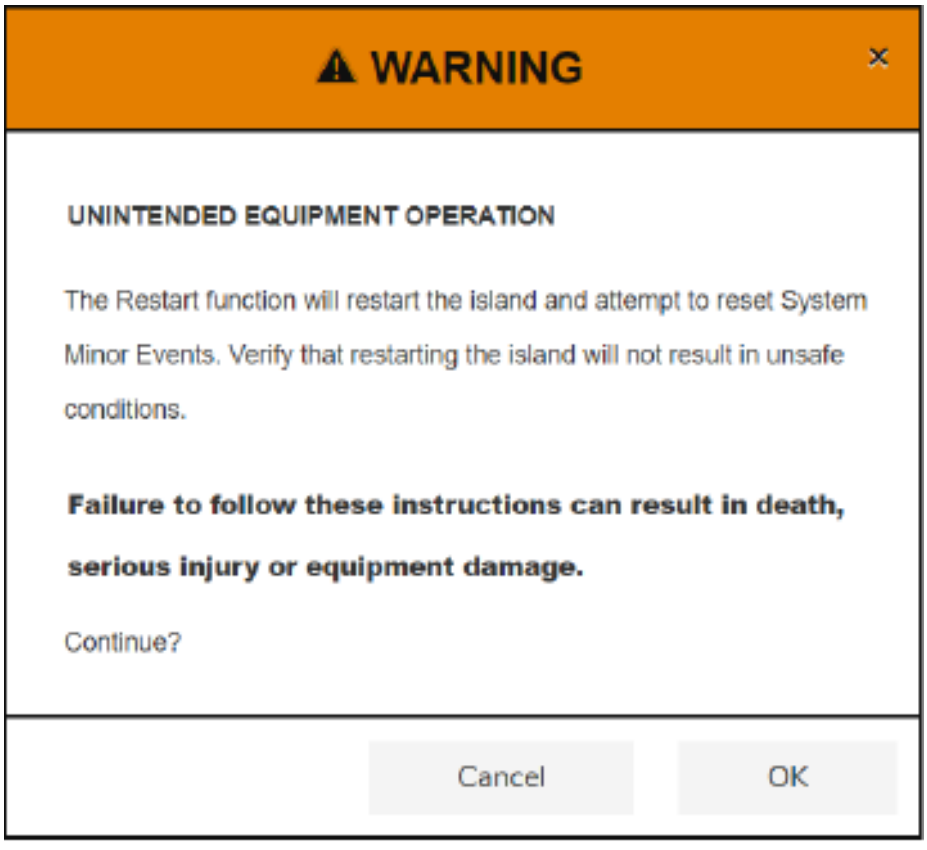

7. Click OK to restart the system, initiating the island's boot process. Observe the LEDs on the bus coupler until they turn green, indicating that the island has entered the operating state. The IP address and network take effect after the restart completes. The boot process takes about two minutes.

SoMove™ Project File

Use this option to replace the bus coupler when a working micro SD card is not available, and FDR is not an option.

Prerequisite: A SoMove project file can be loaded onto the replacement bus coupler using the TeSys island DTM.

⚠⚠DANGER

HAZARD OF ELECTRIC SHOCK, EXPLOSION, OR ARC FLASH

Turn off all power before working on or inside the equipment.

Failure to follow these instructions will result in death or serious injury.

1. Disconnect all power from the island.
2. Remove the micro SD card from the existing bus coupler if one is installed.
3. Set the micro SD card aside. Do **not** insert the micro SD card into the replacement bus coupler.
4. Remove the existing bus coupler from the DIN rail and install the replacement module by following the instructions in "Installing the Bus Coupler" in the *TeSys™ island Installation Guide*.
5. Apply power to the island, initiating the boot process. Observe the LEDs until they turn green, indicating that the island has entered the operating state. The boot process takes about two minutes.
6. Connect to the island via the TeSys island DTM, and load the SoMove project file as follows:
   a. Launch the TeSys island DTM.
   b. Connect to the island.
   c. Click Store to Device.
   d. Select the project file that you wish to load from the PC to the bus coupler.

      NOTE: The TeSys island DTM triggers the island to reboot as part of the process of loading the project file. Observe the LEDs until they turn green, indicating that the island has entered the operating state. The boot process takes about two minutes.

Module Replacement

This section contains instructions for replacing all TeSys™ island modules except the bus coupler:

- standard and SIL(39) starters
- power interface modules
- SIL interface modules
- voltage interface modules
- digital I/O modules
- analog I/O modules

NOTE: The original device and the replacement device must have the same commercial reference number.

⚠⚠DANGER

HAZARD OF ELECTRIC SHOCK, EXPLOSION, OR ARC FLASH

Turn off all power before working on or inside the equipment.

Failure to follow these instructions will result in death or serious injury.

1. Disconnect all power from the island.
2. Remove the existing module from the DIN rail.

   NOTE: When replacing two speed, two direction, or Y/D starters, also remove the adjacent starter. Then remove any accessories used to connect the starters, so the accessories can be reused to install the replacement module.
3. Install the replacement module according to the instructions in the *TeSys island Installation Guide*:
   - *Installing Standard Starters and SIL Starters*
   - *Mounting Power Interface Modules on DIN Rail*
   - *Mounting the I/O and Interface Modules on DIN Rail*

   NOTE: When replacing two speed, two direction, or Y/D starters, install any accessories to connect the replacement starter to the adjacent starter, before installing the modules on the DIN rail.
4. Apply 24 Vdc power to the island.

   NOTE: Do not apply the mains power at this time.
5. Use Test mode to verify that the device is operating correctly.
6. Apply the mains power to the island, initiating the boot process. Observe the LEDs until they turn green, indicating that the island has entered the operating state. The boot process takes about two minutes.

(39) Safety Integrity Level according to standard IEC 61508.

Alarms and Events

What’s in This Part

This section lists the common alarms and events you might encounter, and possible corrective actions.

Alarms – Corrective Actions

Alarms inform you of potential issues with the island. They do not affect the avatar or the state of the island. The following are potential internal events and protection alarms you might encounter during operation.

NOTE: Use the Event Log to help determine the cause of alarms on the system.

Internal Events

The following are potential internal events you might encounter during operation:

Asset Alarm

This alarm is triggered under the following conditions:

- When the *Number of Contactor Cycles* value for a starter or SIL(40) starter on the island exceeds 90% of the life of the device (as calculated based on a combination of multiple factors, including the utilization category, voltage, and FLA setting)
- When the *Mirror Relay Operations Counter* for a SIL interface module (SIM) on the island equals or exceeds 90% of the life of device (100,000)

Corrective Action:

Check the device diagnostics for each device. The one triggering the alarm is the one with the highest number of operations. Schedule maintenance to replace it.

Device Temp Threshold Alarm

Device temperatures are monitored by reading their internal temperatures. A device internal temperature alarm is triggered for a device if the internal temperature read exceeds its defined threshold.

Corrective Action:

Verify that the equipment design meets the ambient temperature requirements for the product. Cycle the island power. Replace the device if cycling power is unsuccessful in clearing the alarm.

CPU Load Alarm

Triggered when the CPU load read from the device exceeds 60%.

Corrective Action:

Cycle power. If the alarm is still present, contact your next level of support. The device may need to be replaced.

(40) Safety Integrity Level according to standard IEC 61508.

Avatar Alarm

A device within the avatar has experienced an internal event such as the following:

- Communication Event
- AFE Communication Loss
- Control Voltage Out of Range
- DAC Communication Loss
- DAC Over Temperature
- DAC Output Event

Corrective Action:

Cycle power. If the alarm is still present, contact your next level of support. The device may need to be replaced.

Device Data Not Updated Alarm

Indicates a potential perturbation of communication between devices.

Corrective Action:

Verify that all installation guidelines are followed in the setup of the equipment.

Audit Record Capacity Alarm

The number of allowed audit records has been reached.

Internal comm loss (minor event)

Corrective Action:

- Check for the device healthiness and CAN cables are tight.
- Verify that all installation guidelines are followed in the setup of the equipment.

Avatar Protection Alarms

An avatar protection alarm is a less-serious, though still undesirable, operating condition. An alarm indicates that corrective action may be required to help prevent a problem condition from occurring. If left unresolved, an alarm may lead to a trip condition. Alarm-related parameters can be configured for most protection functions.

Thermal Overload Alarm

The Thermal Overload protection function is based on a motor thermal model using phase currents as inputs. If enabled, this function triggers an alarm when the motor capacity used exceeds the percentage set in the Overload Alarm Level parameter.

Jam Alarm

The Jam protection function detects when a motor is jammed during the Run state, and it either stops, or is suddenly overloaded and draws excessive current. If enabled, this function triggers an alarm when the maximum phase current (Imax) exceeds the specified Jam Alarm Level parameter value.

Undercurrent Alarm

The Undercurrent protection function detects unexpected low current consumption during the Run state. This condition is typically associated with motors running free, without a load for instance, if a drive belt or shaft has broken. If enabled, this function triggers an alarm when the average phase current remains below the specified Undercurrent Alarm Level parameter value.

Overcurrent Alarm

Avatars with Overcurrent Alarm enabled signal an Overcurrent Alarm if the maximum phase current exceeds the Overcurrent Alarm Level in the motor Run state.

Phase Unbalance Alarm

The Current Phase Unbalance protection function only applies to three-phase installations. If enabled, this function triggers an alarm when the current phase unbalance exceeds the specified Current Phase Unbalance Alarm Level parameter value.

Ground Current Alarm

The Ground Current Detection protection function detects ground currents indicating contact between an energized conductor and ground or the equipment frame. If enabled, this function triggers an alarm when the ground current exceeds the specified Ground Current Alarm Level parameter value.

Motor Overheat Alarm

The Motor Overheat protection function is only available for avatars whose Temperature Sensor Available parameter is activated. These avatars include an analog I/O module that is wired to the temperature input from a temperature sensor associated with the protected motor. If enabled, this function triggers an alarm when the motor temperature exceeds the percentage set in the Overheat Alarm parameter.

Minor Events – Corrective Actions

When the TeSys island encounters a minor event:

- The fieldbus and service ports remain activated.
- Only the System or Avatar is activated.
- All power modules and I/O modules are in the device Off state.
- To exit a minor event state that is not automatically recovered, a system reset, restart, or control power cycle is required. A system reset command can be issued manually from the TeSys island DTM, the OMT, or the PLC.

  NOTE:

  - During a minor event at system level, the whole island system will be de-energized.
  - During a minor event at avatar level, only the respective avatar will de-energize instead of the whole system.

The following scenarios cause the island to encounter a minor event:

Minor Events and Corrective Actions

Minor Event	Diagnosis	Corrective Action
Topology mismatch	The island configuration in the active context file does not match the actual discovered topology of the island	Determine the proper configuration and align the configuration with the physical hardware The OMT and the DTM have a compare function in the diagnostics views to compare the topology. Perform one of the following: • System Reset • System Restart • Control power cycle
Switch off island command	Island received Switch Off Island command	N/A
Too many modules	The number of physical modules detected in the island is beyond the maximum allowed limit of 21	1. Power down 2. Remove modules to meet the 21 maximum requirement 3. Power on
No modules on island	There are no physical modules installed on the island	Complete the installation of the modules on the island
Control voltage 120%	The voltage was over 120% for longer than the allowed duration	Verify that the power supply voltage is within range
Firmware update unsuccessful	Firmware download to the device was unsuccessful after three consecutive tries	• Check for the latest version of firmware available • Contact support
Summary file integrity check	Configuration file corruption detected	• Download a new configuration file to the island • Verify that the micro SD card is functioning properly
Context file integrity check	Configuration file corruption detected	• Download a new configuration file to the island • Verify that the micro SD card is functioning properly
Avatar settings file integrity check	Configuration file corruption detected	• Download a new configuration file to the island • Verify that the micro SD card is functioning properly
Avatar settings file malformed	Configuration file corruption detected	• Download a new configuration file to the island • Verify that the micro SD card is functioning properly
No active project file	Bus Coupler is not configured with an active project file	Configure Bus Coupler using engineering tools
Range of voltage supply	Confirm the sufficient voltage supply	In order to run the TeSys island, the voltage supply must be higher than 20.7 V.

Other Alarms and Corrective Actions

Other Alarms and Corrective Actions

Alarm	Diagnosis	Corrective Action
Device Firmware Version Mismatch	Connected module firmware does not match with the configured system.	Perform a system restart or power cycle.

Major Events – Corrective Actions

When the TeSys island encounters a major event:

- The fieldbus and service ports are not activated.
- No avatars are activated, including the System avatar.
- All power modules and I/O modules are in the device Off state.
- A cycle of the control power is required to exit a major event state.

The following scenarios cause the island to encounter a major event:

Major Event	Diagnosis	Corrective Action
Control Voltage exceeds 150%	The voltage was over 150% for longer than the allowed duration	Verify that the power supply voltage is within range.
Control voltage exceeds 120% for 2 s	The voltage was over 120% for longer than the allowed duration of 2 seconds consecutively	Verify that the power supply voltage is within range.
Bus Coupler Internal Device Event	The LED is red, and Fieldbus communication is not working on the Bus Coupler	Cycle power. If the problem persists, contact the next level of support.

System Logs

What's in This Part

TeSys island maintains two log files:

- System event log related to the normal operation of the system
- Security related audit log

Multiple events occurring simultaneously (for example, alarms that are simultaneously cleared when the load is turned off) are logged as individual events. There is no constraint or preference for the order in which multiple simultaneous events are logged.

To view the system logs:

1. Click the **User Management** panel.
2. Expand the **System Logs** window.

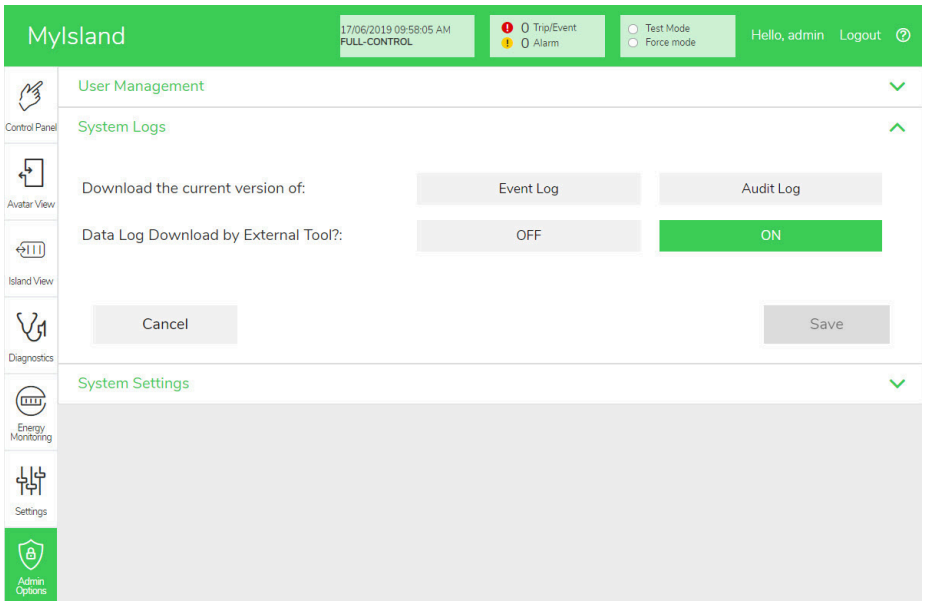

You can download the current version of the **Event log** or the **Audit log**.

- The event log is a .csv file containing the events used for debugging.
- The audit log is a cybersecurity feature showing actions related to user login, user access to force mode, and user downloads of new context files. It logs any security related event.

Event Log

The System Event Log is a CSV file with each event logged in a separate line delineated by the newline escape sequence \n, using semicolon separators and the following columns:

- Timestamp
- Avatar identification
- Device identification
- Event identification
- Event description

Event Log Priority

TeSys island supports an Event Log Priority Threshold, with a range of 0–7 and default value of 3. The priorities are defined in the table below:

Event	Priority
System State Transition	0
Avatar Protection Trip	1
Avatar Protection Reset	1
Avatar Protection Alarm	2
System Minor Event	1
System Alarm	0
Island Device Internal Event	0
SIL(41) Stop	1
System Time Update	0
Debugging	6
System Other	3
Power Outage	4
Avatar Minor Event	1

System Event Log Attributes

System Event Log attributes are defined in the following table.

Attribute	Description
timestamp	The system time YYYY-MM-DDThh:mm:ss.mmm Example: 2018-01-02T15:02:59.970
avatarName	The user defined avatar name
avatarNumber	The number of the avatar in the digital tool
avatarSILGroup	The SIL(41) group of the avatar
deviceTag	The user defined device tag
deviceNumber	The number of the device in the physical order of the system (the Node ID on the internal bus)
value	The new value of the data change event being logged.

(41) Safety Integrity Level according to standard IEC 61508.

System State Transition Events

TeSys island logs the following System State Transition events when there is any change in value of the System Avatar Status data:

- Degraded Mode
- Force Mode
- Minor Event
- Test Mode
- Operational
- Pre-Operational

Avatar Protection Trip Events

TeSys island logs the following Avatar Protection Trip events:

- Thermal Overload
- Motor Overheat
- Jam
- Undercurrent
- Long Start
- Overcurrent
- Stall
- Ground Current
- Current Phase Reversal
- Phase Configuration
- Current Phase Unbalance
- Current Phase Loss

Avatar Protection Reset Events

TeSys island logs Avatar Protection Reset events.

Avatar Protection Alarm Events

TeSys island logs the following Avatar Protection Alarm events:

- Thermal Overload
- Motor Overheat
- Jam
- Undercurrent
- Overcurrent
- Ground Current
- Current Phase Unbalance

System Minor Events

TeSys island logs the following System Minor Event events:

- No Device
- More Devices
- Device Mismatch
- Internal Com Loss
- SD Card Event
- Power supply out of range

Avatar Minor Events

TeSys island logs the following Avatar Minor Event events:

- Asset Alarm
- Device Mismatch
- Device Data not updated
- A mismatch between the installed modules and the modules defined in the context file

System Alarm Events

TeSys island logs the following System Alarm events:

- Control Voltage Fluctuation
- Asset Alarm
- No Context
- Device Data Not Updated

Island Device Internal Events

TeSys island logs the following island device internal events.

NOTE: AFE stands for analog front end. DAC stands for digital-to-analog converter.

- Communication Event
- AFE Over Temperature
- CPU Over Temperature
- AFE Communication Loss
- Control Voltage Out Of Range
- DAC Communication Loss
- DAC Over Temperature
- DAC Output Event

SIL Stop Events

NOTE: Safety Integrity Level according to standard IEC 61508.

TeSys island logs the following SIL Group Stop events for SIL groups 1–10:

- Not yet in SIL Stop State
- SIL Stop State achieved
- Wiring issue, in SIL Stop State

Debugging Events

TeSys island logs Debugging events.

System Other Events

TeSys island logs the following system other events:

- Invalid system context
- Invalid software or firmware Image
- Factory Reset Command Received
- Command feedback mismatch

Power Outage Events

TeSys island logs the following Power outage events:

- TeSys island logs power outage events, with a detailed definition of the event description in the bus coupler specifications.
- Insufficient supply voltage - When this event happen all the modules in TeSys island will not have power supply except bus coupler module. This event will happen when supply voltage is less than 20.7 V.
- Insufficient supply on close command to starters.

System Time Update Events

TeSys island logs system time update events time before update (value before system time update, in time stamp format).

Audit Log

The Audit Log is a CSV file with each event logged in a separate line delineated by \n, using semicolon separators and the following columns:

- Timestamp
- Event source
- Event type
- Event identification
- Event result

Audit Log Format

- TeSys island formats the **timestamp** in the Audit Log in the following format:

  YYYY-**MM**-**DD**T**hh**:**mm**:**ss**.**mmm**

  Example: 2018-01-02T15:02:59.980
- TeSys island formats the **source** in the Audit Log in the following format with valid values as defined below:

  <<source IP address>>,<<type of tool>>,<<user name>>

  NOTE: If the source IP address is not known, a hyphen (-) is substituted.

Valid values for <<type of tool>> are

- DTM
- OMT
- other

Valid values for <<user name>> are

- the user name for the *OMT* tool type
- a hyphen (-) for the *DTM* and the *other* tool type

Examples:

- 192.168.100.1,OMT,Bob
- 192.168.0.1,DTM,-

System Command Events

TeSys island logs the following System Command events in the Audit Log:

- System Reset
- System Restart
- Switch Off Island
- System Alarms Cntr Rst
- System Minor Events Cntr Rst
- Fieldbus Comm. Events Cntr Rst
- Locate Island
- Enter Test Mode
- Enter Forced Mode
- Exit Test Mode
- Exit Forced Mode
- Forced Mode Release Control
- Factory Reset Command

User Login Events

TeSys island logs the following User Login events in the Audit Log:

- successful user login attempts
- number of unsuccessful login attempts for this user since last successful login

Island Topology Change Events

TeSys island logs the following Island Topology Change events in the Audit Log:

- **Device added**

  The bus coupler has discovered a new device that has not been addressed. This event is detected when the bus coupler receives any response to a “Read Device ID Out” message, periodically sent to Bus Device address 127, requesting Device ID information.

- **Device removed**

  The bus coupler has detected that a Bus Device has stopped communicating on the bus.

File Transfer Events

TeSys island logs File Transfer events for received files, indicating whether they are successfully validated by ESW in the Audit Log.

Troubleshooting

What’s in This Part

This section describes the following:

- What to do if a device detects an event
- How to perform a factory reset

NOTE: If there is any command mismatch, contact technical support.

Avatar Device Event

When an internal event is detected on a given device, all avatars related to that device are impacted. For instance, an event detected on a SIL(42) interface module impacts all the avatars belonging to its SIL Group.

In this situation, each impacted avatar signals an Avatar Device Event and puts its associated devices into the Off state according to the table below (device dependent).

TeSys island Module Triggering an Avatar Device Event	**Data Behavior**
Voltage interface module	All RMS and instantaneous voltage and power measurements reported as 0.
SIL interface module	SIL Group status is reported as “SIL Group Impacted By ADE.”
Power devices (power interface module, starter, SIL starter)	Off state: power modules are open. • Current and power measurements reported as 0. • Energy calculations for avatar updated with input of 0 power.
Digital I/O module, analog I/O module	Off state: • Digital outputs are off (set to 0). • Analog outputs go to 0 V or 0 mA, depending on configuration. • Inputs reported as 0.

(42) Safety Integrity Level according to standard IEC 61508.

Performing a Factory Reset

The TeSys island system can be reset to factory settings, returning the bus coupler to its out-of-the-box conditions. This is useful, for example, to quickly get to Test mode when building or modifying an island.

TeSys island accepts a Factory Reset command from the digital tool (TeSys island DTM or OMT) with exclusive control when the system is in Pre-Operational mode, Test mode, or Minor Event state.

Upon receiving a Factory Reset command, TeSys island

1. Deletes the following files:
   - system context files (active, pending, and SDP if present)
   - SEDP files (including active, pending, or update)
   - Users file
2. Automatically restarts

NOTE:

- When the Users file is deleted, any added users are removed. In addition, the group management and the administrative password are reset to default values.
- A Factory Reset command does **not** delete log files.

Using the TeSys island DTM

To perform a factory reset using the TeSys island DTM, follow the steps below:

1. In the TeSys island DTM, select Device > Factory Reset.

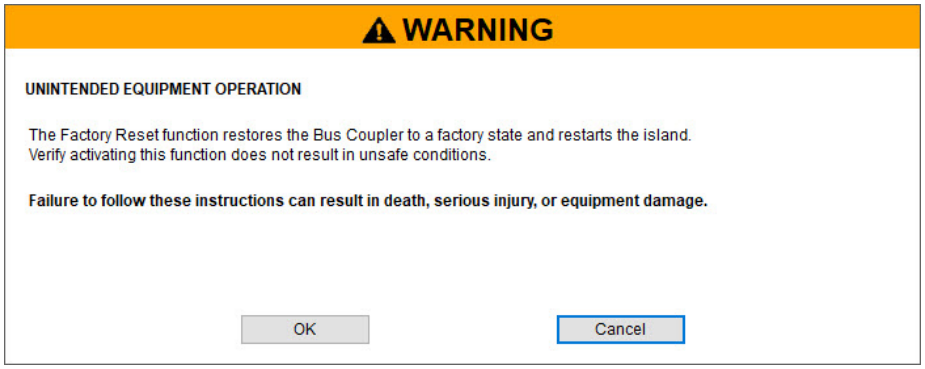

2. Click OK to perform the factory reset.
   - The island starts the reset procedure.
   - The PWR LED on the bus coupler is yellow.
   - The LEDs on the rest of the modules flash green.

Using the TeSys island OMT

To perform a factory reset using the OMT, follow the steps below:

1. Click the Admin Options panel.
2. Expand the System Settings section.
3. Click the Restore Factory Defaults button.

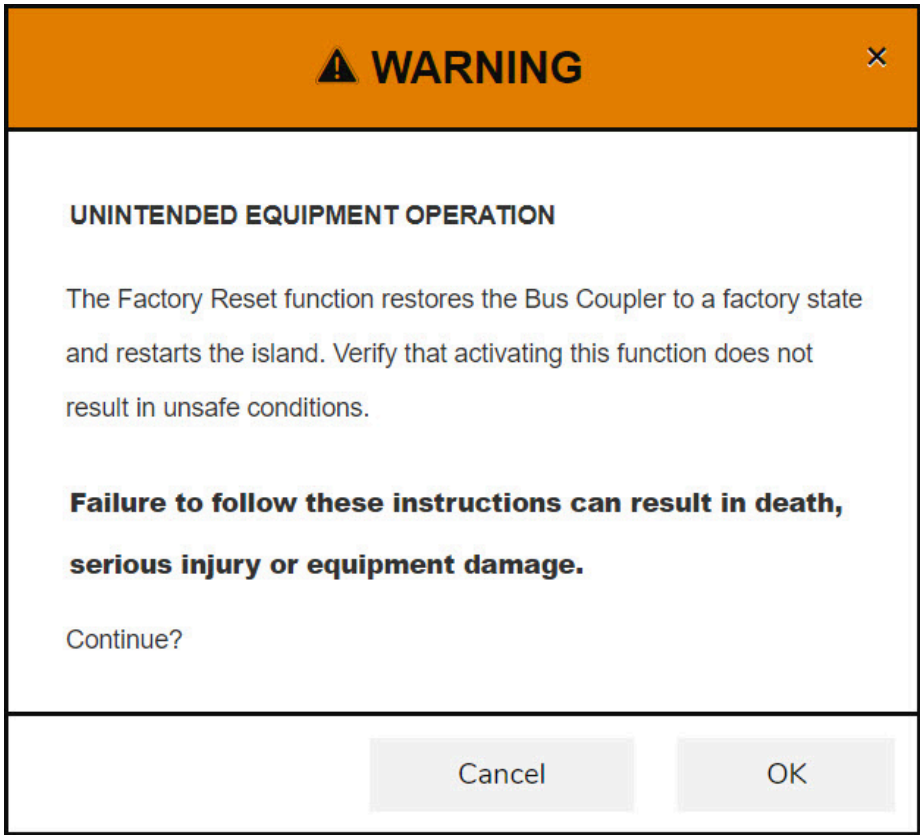

4. Click OK to continue with the factory reset.

- The island starts the reset procedure.
- The PWR LED on the bus coupler is yellow.
- The LEDs on the rest of the modules flash green.

Secure Data Sanitization

For the user data sanitization method, scope , and consequences details as per GB 46864-2025, refer Performing a Factory Reset, page 217.

NOTE: Factory Reset is equivalent to data sanitization; both restore the TeSys island to its default state by removing system context, configuration data, and user data.

Appendix

What's in This Part

Avatar Composition 220
Avatar Wiring Schematics and Accessory Diagrams 224

⚠WARNING

UNINTENDED EQUIPMENT OPERATION

- For complete instructions about functional safety, refer to the *TeSys island Functional Safety Guide*, 8536IB1904.

Failure to follow these instructions can result in death, serious injury, or equipment damage.

Avatar Composition

Standard Starter (ST)



Power Interface Module (PM)



SIL(43) Starter (SS)



SIL Interface Module (SM)



Digital I/O Module (DG)



Analog I/O Module (AN)



Avatar Modules

TeSys™ Avatar	Module 1	Module 2	Module 3	Module 4	Module 5	Optional
Switch	ST					
Switch - SIL Stop, W. Cat 1/2 (44)	SS	SM				
Switch - SIL Stop, W. Cat 3/4 (45)	SS	SS	SM			
Digital I/O	DG					
Analog I/O	AN					
Power Interface without I/O (Measure)	PM					AN
Power Interface with I/O (Control)	DG	PM				AN
Motor One Direction	ST					AN/DG
Motor One Direction - SIL Stop, W. Cat 1/2	SS	SM				AN
Motor One Direction - SIL Stop, W. Cat 3/4	SS	SS	SM			AN
Motor Two Directions	ST	ST				AN/DG
Motor Two Directions - SIL Stop, W. Cat 1/2	SS	SS	SM			AN
Motor Two Directions - SIL Stop, W. Cat 3/4	SS	SS	SS	SM		AN
Motor Y/D One Direction	ST	ST	ST			AN/DG
Motor Y/D Two Directions	ST	ST	ST	ST		AN/DG
Motor Two Speeds	ST	ST	ST (46)			AN/DG
Motor Two Speeds - SIL Stop, W. Cat 1/2	SS	SS	SM			AN
Motor Two Speeds - SIL Stop, W. Cat 3/4	SS	SS	SS	SM		AN
Motor Two Speeds Two Directions	ST	ST	ST	ST		AN/DG
Motor Two Speeds Two Directions - SIL Stop, W. Cat 1/2	ST	ST	SS	SS	SM	AN
Motor Two Speeds Two Directions - SIL Stop, W. Cat 3/4	SS	SS	SS	SS	SM	AN
Resistor	ST					

(43) Safety Integrity Level according to standard IEC 61508.
(44) Wiring Category 1 and Category 2 according to ISO 13849.
(45) Wiring Category 3 and Category 4 according to ISO 13849.
(46) Motor two speeds with Dahlander option.

Avatar Modules (Continued)

TeSys™ Avatar	Module 1	Module 2	Module 3	Module 4	Module 5	Optional
Power Supply	ST					
Transformer	ST					
Pump & Ventilator	DG	ST				AN/DG
Conveyor One Direction	DG	ST				AN/DG
Conveyor One Direction - SIL Stop, W. Cat 1/2	DG	SS	SM			AN/DG
Conveyor Two Directions	DG	ST	ST			AN/DG
Conveyor Two Directions - SIL Stop, W. Cat 1/2	DG	SS	SS	SM		AN/DG

LAD9R1 Assembly Kit for 9–38 A (Size 1 and 2) Starters

LAD9R1 Assembly Kit	For Use with Avatars:	Kit Components	Description
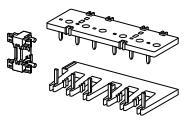	Motor Two Directions	LAD9V5	Parallel link between two starters
	Motor Two Directions - SIL Stop, W. Cat 1/2	LAD9V6	Reversing link between two starters
	Motor Two Directions - SIL Stop, W. Cat 3/4 Motor Y/D One Direction Motor Two Speeds Two Directions Motor Two Speeds Two Directions - SIL Stop, W. Cat 1/2 Motor Two Speeds Two Directions - SIL Stop, W. Cat 3/4 Conveyor Two Directions Conveyor Two Directions - SIL Stop, W. Cat 1/2	LAD9V2	Mechanical interlock with assembly staple

LAD9R3 Assembly Kit for 40–65 A (Size 3) Starters

LAD9R3 Assembly Kit	For Use with Avatars:	Kit Components	Description
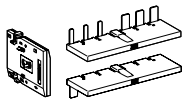	Motor Two Directions	LA9D65A6	Parallel link between two starters
	Motor Two Directions - SIL Stop, W. Cat 1/2	LA9D65A69	Reversing link between two starters
	Motor Two Directions - SIL Stop, W. Cat 3/4 Motor Y/D One Direction Motor Two Speeds Two Directions Motor Two Speeds Two Directions - SIL Stop, W. Cat 1/2 Motor Two Speeds Two Directions - SIL Stop, W. Cat 3/4 Conveyor Two Directions Conveyor Two Directions - SIL Stop, W. Cat 1/2	LAD4CM	Mechanical interlock

Shorting Blocks for Y/D Avatars

Shorting Blocks	For Use with Avatars:	Reference Number	Description
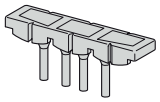	Motor Y/D One Direction Motor Y/D Two Directions	LAD9P3	Shorting block / 3P parallel link for 9–38 A (size 1 and 2) starters Used for linking 3 poles of a contactor in a wye-delta (Y/D) starter
	Motor Y/D One Direction Motor Y/D Two Directions	LAD9SD3S	Shorting block / 3P parallel link for 40–65 A (size 3) starters and warning label Used for linking 3 poles of a contactor in a wye-delta (Y/D) starter

Mechanical Interlocks

Mechanical Interlocks	For Use with Avatars:	Reference Number	Description
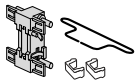	Motor Y/D One Direction Motor Y/D Two Directions Motor Two Speeds Motor Two Speeds - SIL Stop, W. Cat 1/2 Motor Two Speeds - SIL Stop, W. Cat 3/4 Motor Two Speeds Two Directions Motor Two Speeds Two Directions - SIL Stop, W. Cat 1/2 Motor Two Speeds - SIL Stop, W. Cat 3/4	LAD9V2	Mechanical interlock for 9–38 A (size 1 and 2) starters
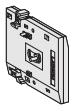	Motor Y/D One Direction Motor Y/D Two Directions Motor Two Speeds Motor Two Speeds - SIL Stop, W. Cat 1/2 Motor Two Speeds - SIL Stop, W. Cat 3/4 Motor Two Speeds Two Directions Motor Two Speeds Two Directions - SIL Stop, W. Cat 1/2 Motor Two Speeds Two Directions - SIL Stop, W. Cat 3/4	LAD4CM	Mechanical interlock for 40–65 A (size 3) starters

Reversing Links

Reversing Links	For Use with Avatars:	Reference Number	Description
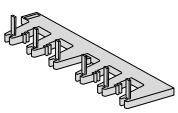	Motor Y/D One Direction Motor Y/D Two Directions	LAD9V6	Reversing link for 9–38 A (size 1 and 2) starters
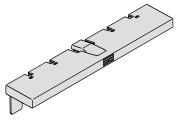	Motor Y/D One Direction Motor Y/D Two Directions	LA9D65A69	Reversing link for 40–65 A (size 3) starters

Parallel Links

Parallel Links	For Use with Avatars:	Reference Number	Description
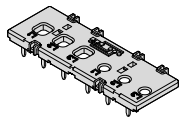	Motor Two Speeds Motor Two Speeds - SIL Stop, W. Cat 1/2 Motor Two Speeds - SIL Stop, W. Cat 3/4 Motor Two Speeds Two Directions Motor Two Speeds Two Directions - SIL Stop, W. Cat 1/2 Motor Two Speeds - SIL Stop, W. Cat 3/4	LAD9V5	Parallel link for 9–38 A (size 1 and 2) starters
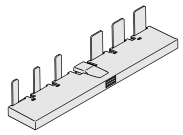	Motor Two Speeds Motor Two Speeds - SIL Stop, W. Cat 1/2 Motor Two Speeds - SIL Stop, W. Cat 3/4 Motor Two Speeds Two Directions Motor Two Speeds Two Directions - SIL Stop, W. Cat 1/2 Motor Two Speeds Two Directions - SIL Stop, W. Cat 3/4	LA9D65A6	Parallel link for 40–65 A (size 3) starters

Avatar Wiring Schematics and Accessory Diagrams

What's in This Chapter

Bus Coupler with I/O Modules and Voltage Interface Modules 225
Switch 225
Switch - SIL Stop, W. Cat 1/2 226
Switch - SIL Stop, W. Cat 3/4 227
Digital I/O 227
Analog I/O 228
Power Interface without I/O (Measure) 228
Power Interface with I/O (Control) 229
Motor One Direction 229
Motor One Direction - SIL Stop, W. Cat 1/2 230
Motor One Direction - SIL Stop, W. Cat 3/4 231
Motor Two Directions 232
Motor Two Directions - SIL Stop, W. Cat 1/2 233
Motor Two Directions - SIL Stop, W. Cat 3/4 234
Motor Y/D One Direction 235
Motor Y/D Two Directions 236
Motor Two Speeds 237
Motor Two Speeds with Dahlandar Option 238
Motor Two Speeds - SIL Stop, W. Cat 1/2 239
Motor Two Speeds - SIL Stop, W. Cat 3/4 240
Motor Two Speeds Two Directions 241
Motor Two Speeds Two Directions - SIL Stop, W. Cat 1/2 242
Motor Two Speeds Two Directions - SIL Stop, W. Cat 3/4 243
Resistor 244
Power Supply 244
Transformer 245
Pump & Ventilator 245
Conveyor One Direction 246
Conveyor One Direction - SIL Stop, W. Cat 1/2 247
Conveyor Two Directions 248
Conveyor Two Directions - SIL Stop, W. Cat 1/2 249

Bus Coupler with I/O Modules and Voltage Interface Modules

NOTE: The TPRBCEIP and TPRBCPFN bus couplers each have three RJ45 ports. The TPRBCPFB bus coupler has only one RJ45 port.

Wiring

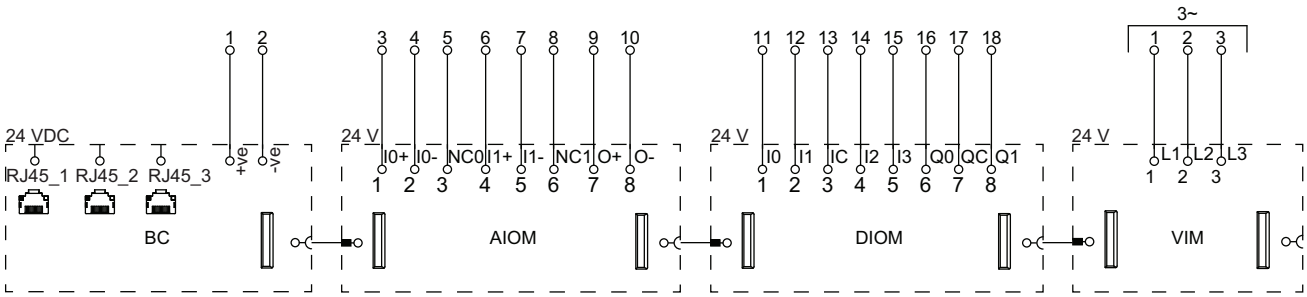

Legend

BC	Bus Coupler (TPRBCEIP)
AIOM	Analog I/O Module
DIOM	Digital I/O Module
VIM	Voltage Interface Module

Switch

Wiring

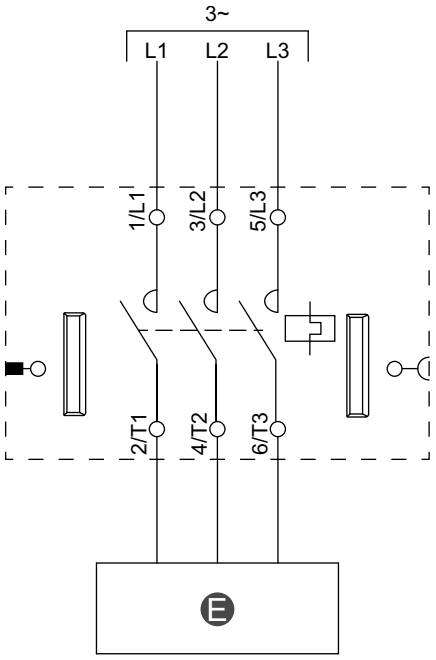

Legend

E	Electrical circuit

Switch - SIL Stop, W. Cat 1/2

NOTE: Safety Integrity Level according to standard IEC 61508. Wiring Category 1 and Category 2 according to ISO 13849.

Wiring

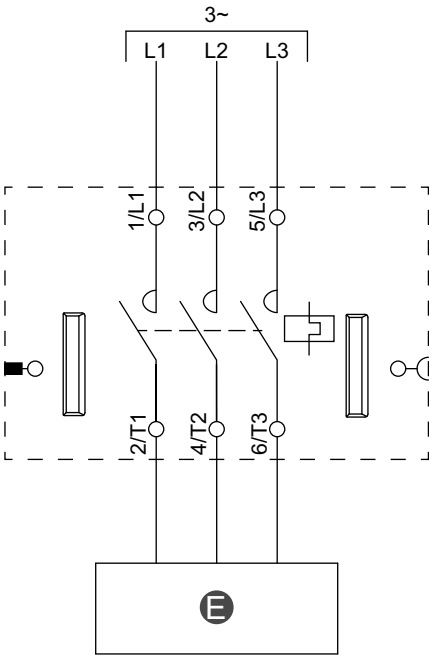

Legend

E	Electrical circuit

Switch - SIL Stop, W. Cat 3/4

NOTE: Safety Integrity Level according to standard IEC 61508. Wiring Category 3 and Category 4 according to ISO 13849.

Wiring (See Legend Table below)

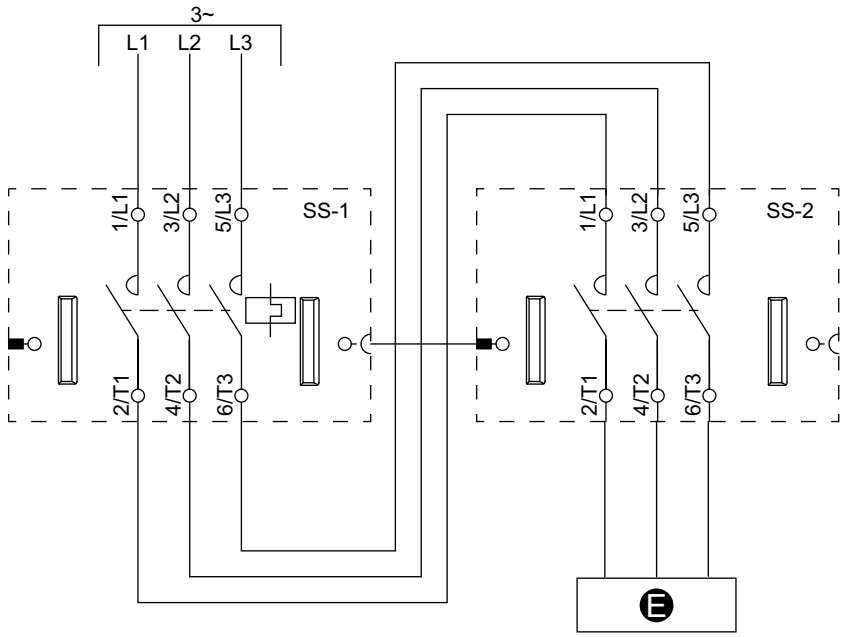

Legend

E	Electrical Circuit
SS–1	SIL starter 1
SS-2	SIL starter 2

Digital I/O

Wiring

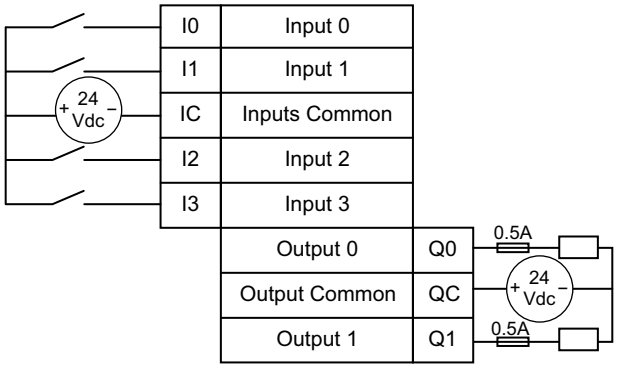

Analog I/O

Current/Voltage Analog Device Input

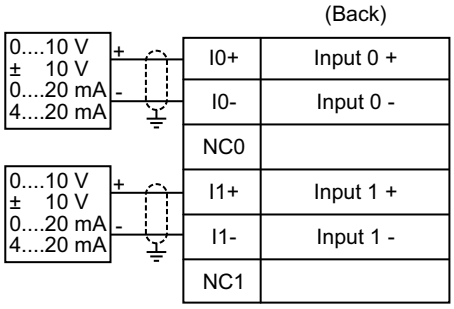

Thermocouples and Positive Temperature Coefficient (PTC) Binary

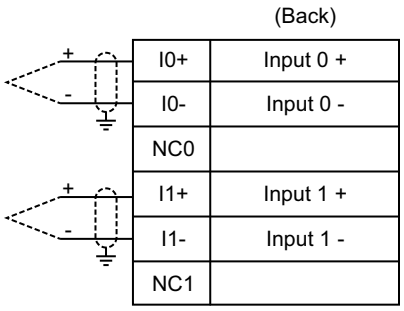

Resistance Temperature Detector

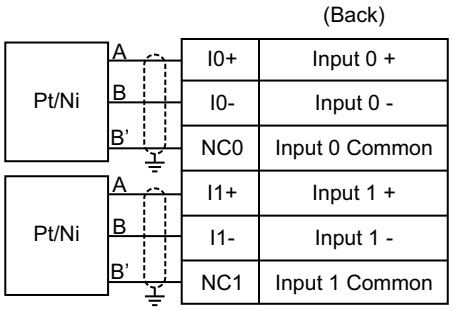

Current/Voltage Analog Device Output

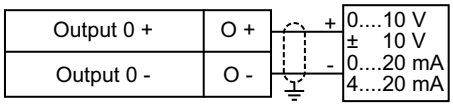

Power Interface without I/O (Measure)

Wiring

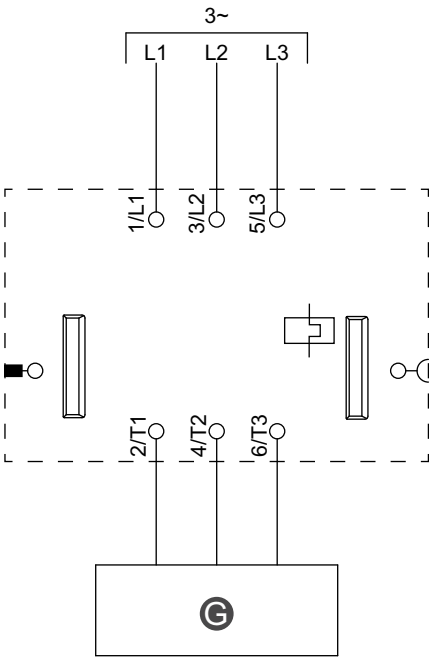

Legend

G	Relay, soft starter, or variable speed drive

Power Interface with I/O (Control)

Wiring

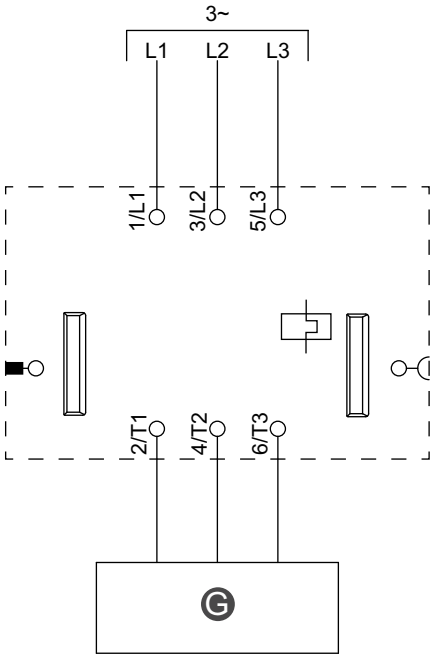

Legend

G	Relay, soft starter, or variable speed drive

Motor One Direction

Wiring

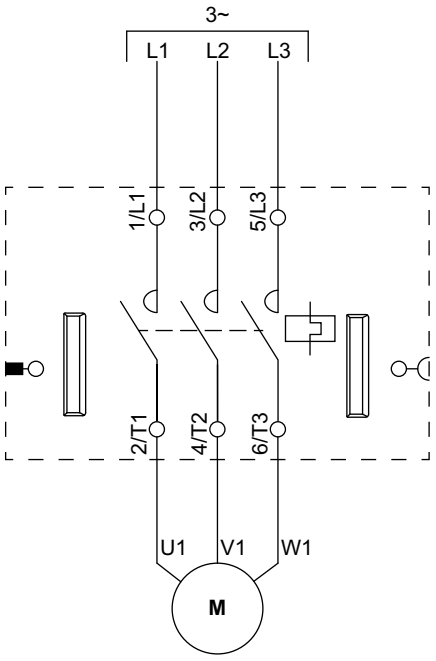

Motor One Direction - SIL Stop, W. Cat 1/2

NOTE: Safety Integrity Level according to standard IEC 61508. Wiring Category 1 and Category 2 according to ISO 13849.

Wiring

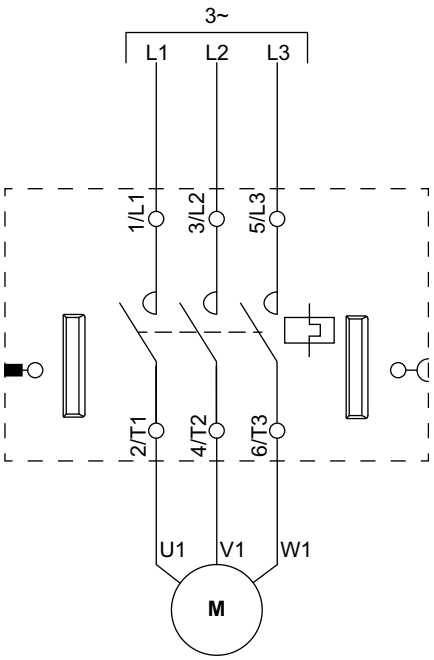

Motor One Direction - SIL Stop, W. Cat 3/4

NOTE: Safety Integrity Level according to standard IEC 61508. Wiring Category 3 and Category 4 according to ISO 13849.

Wiring (See Legend Table below)

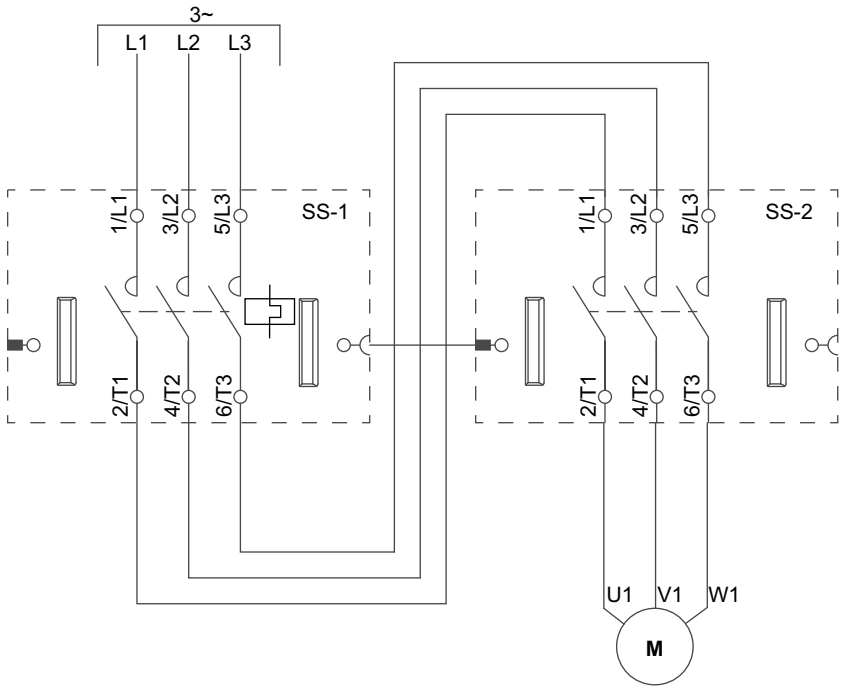

Legend

SS-1	SIL starter 1
SS-2	SIL starter 2

Motor Two Directions

Wiring (See Legend Table below.)

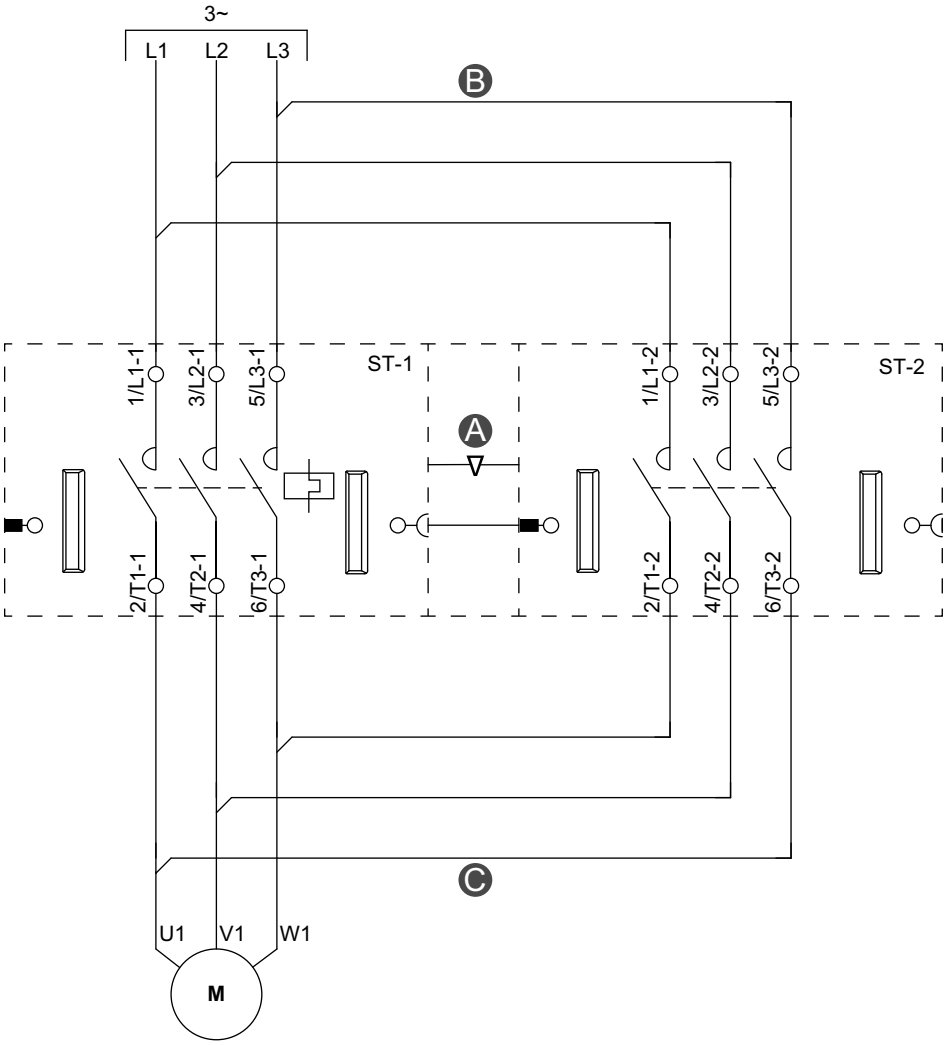

Accessories

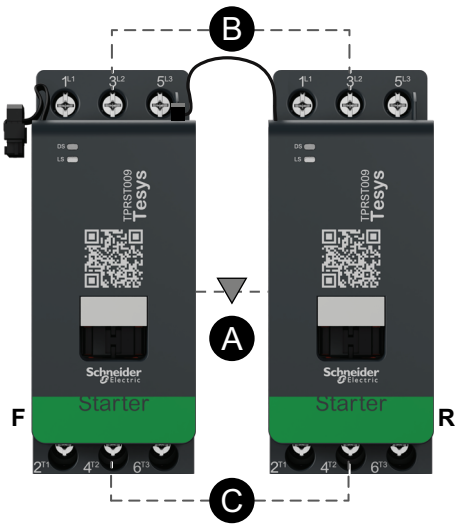

Legend

A	Mechanical interlock
B	Parallel link
C	Reversing link
F	Forward starter
R	Reverse starter
ST-1	Starter 1
ST-2	Starter 2

Motor Two Directions - SIL Stop, W. Cat 1/2

NOTE: Safety Integrity Level according to standard IEC 61508. Wiring Category 1 and Category 2 according to ISO 13849.

Wiring (See Legend Table below.)

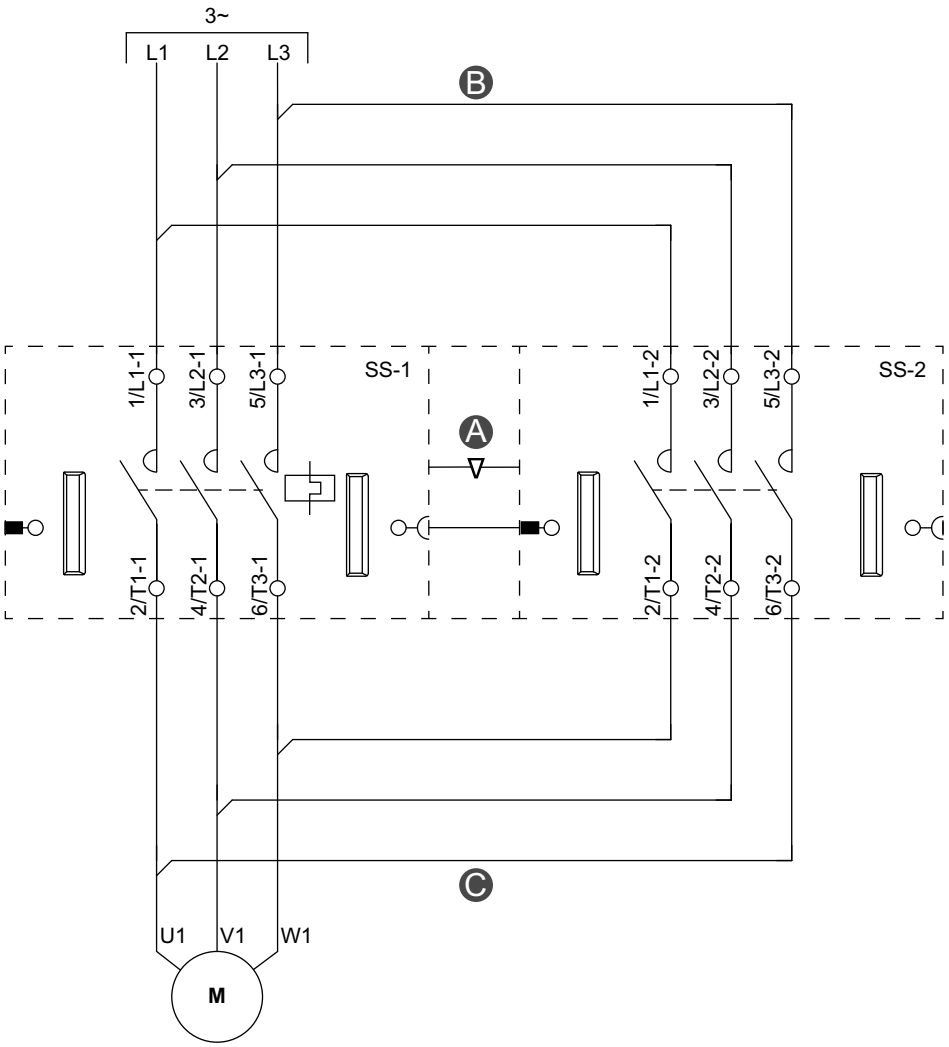

Accessories

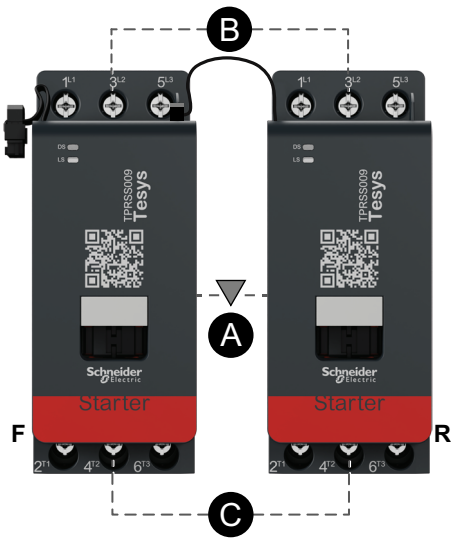

Legend

A	Mechanical interlock
B	Parallel link
C	Reversing link
F	Forward
R	Reverse
SS-1	SIL starter 1
SS-2	SIL starter 2

Motor Two Directions - SIL Stop, W. Cat 3/4

NOTE: Safety Integrity Level according to standard IEC 61508. Wiring Category 3 and Category 4 according to ISO 13849.

Wiring (See Legend Table below)

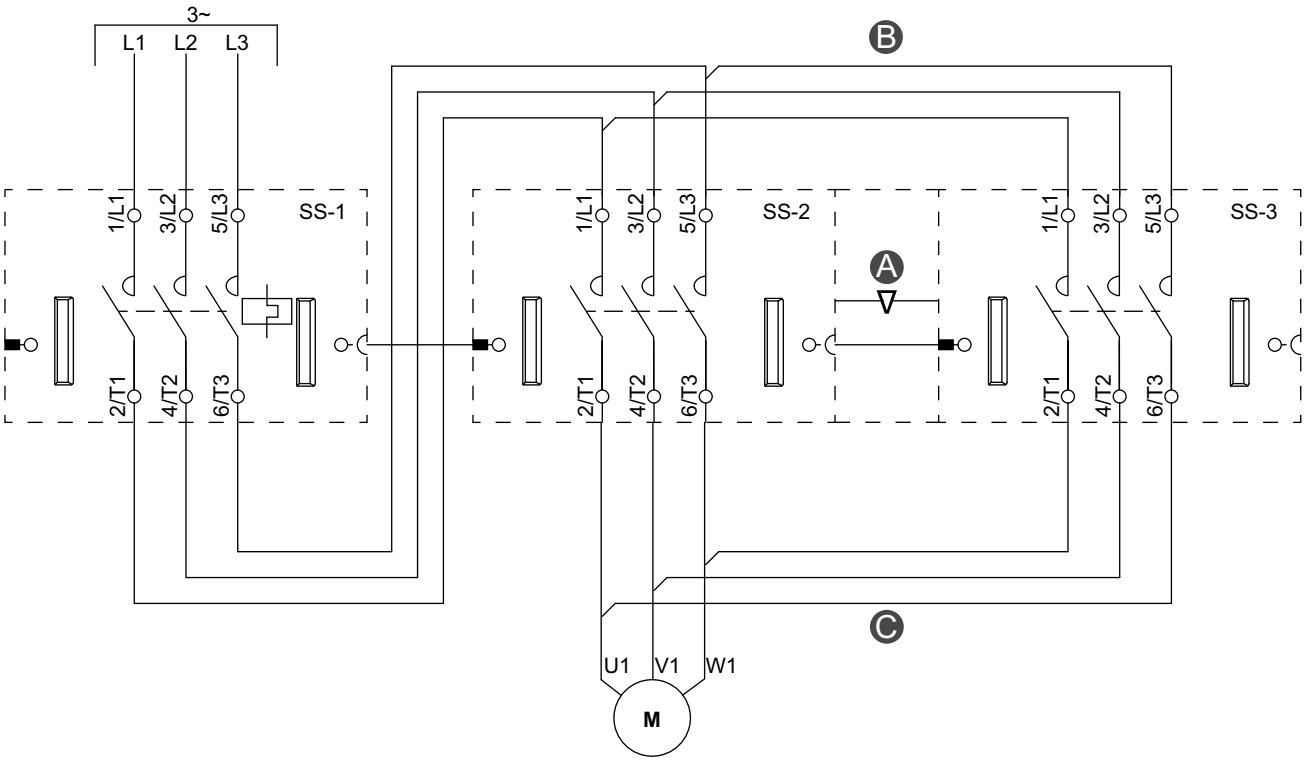

Accessories

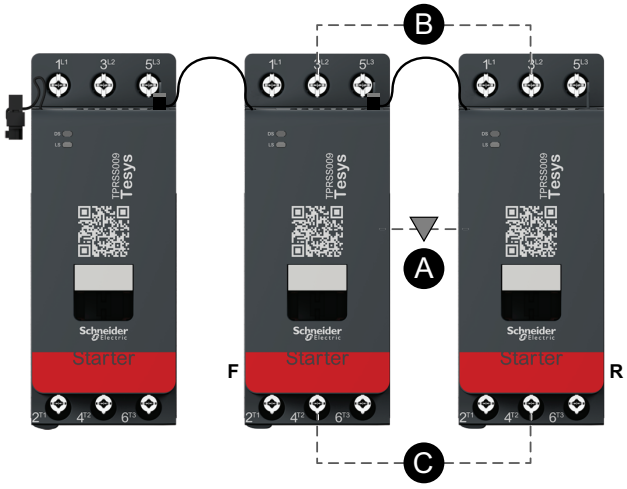

Legend

A	Mechanical interlock
B	Parallel link
C	Reversing link
F	Forward
R	Reverse
SS-1	SIL starter 1
SS-2	SIL starter 2
SS-3	SIL starter 3

Motor Y/D One Direction

Wiring (See Legend Table below.)

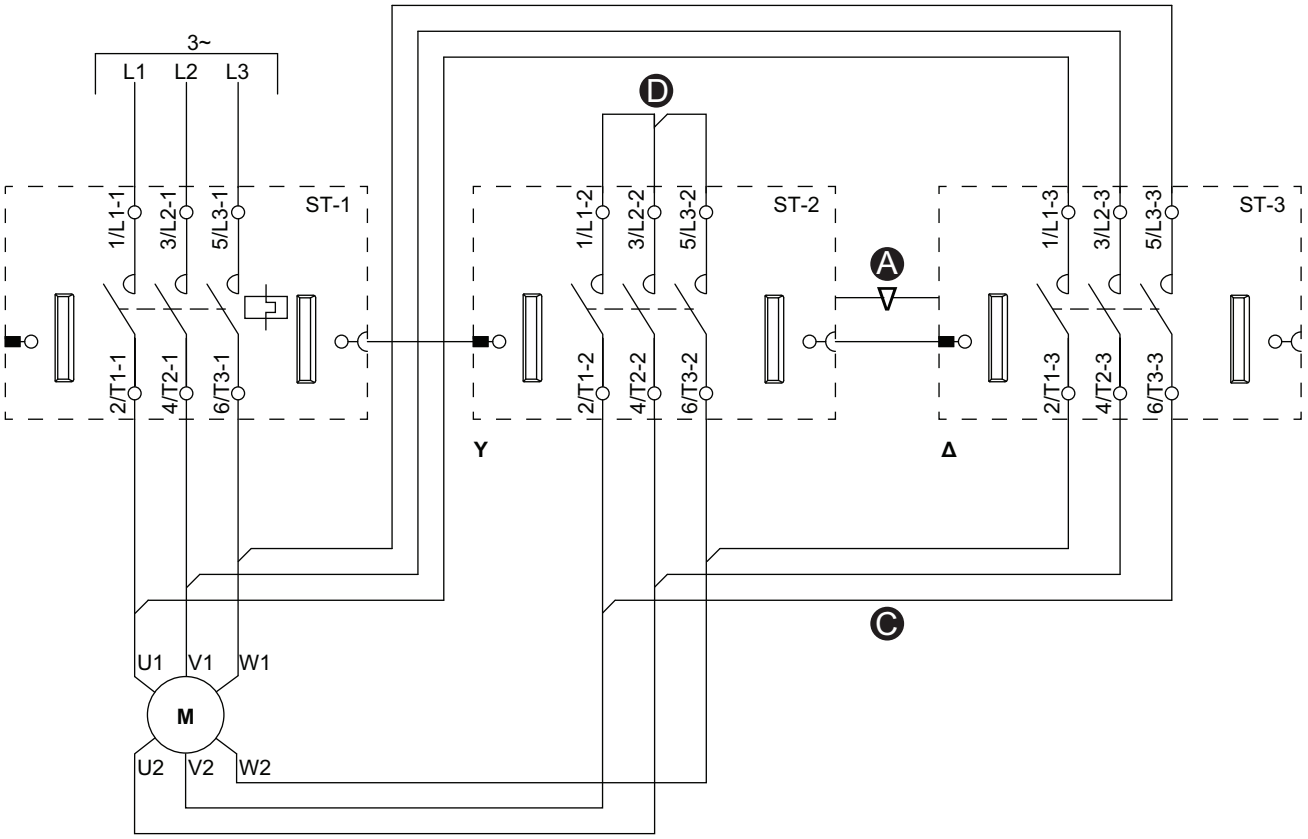

Accessories

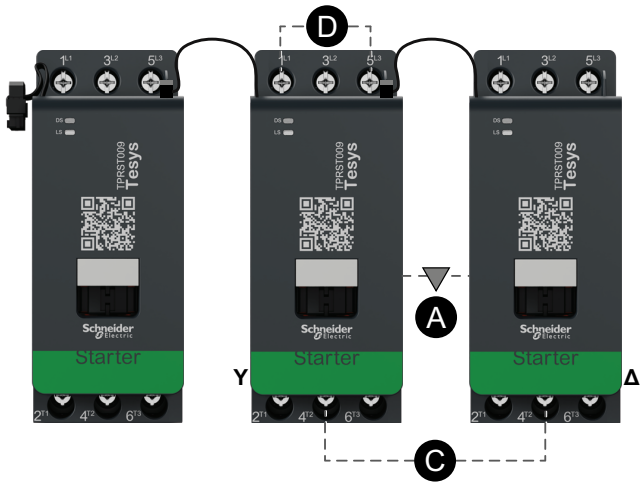

Legend

A	Mechanical interlock
C	Reversing link
D	Shorting block
Y	Wye
Δ	Delta
ST-1	Starter 1
ST-2	Starter 2
ST-3	Starter 3

Motor Y/D Two Directions

Wiring (See Legend Table below.)

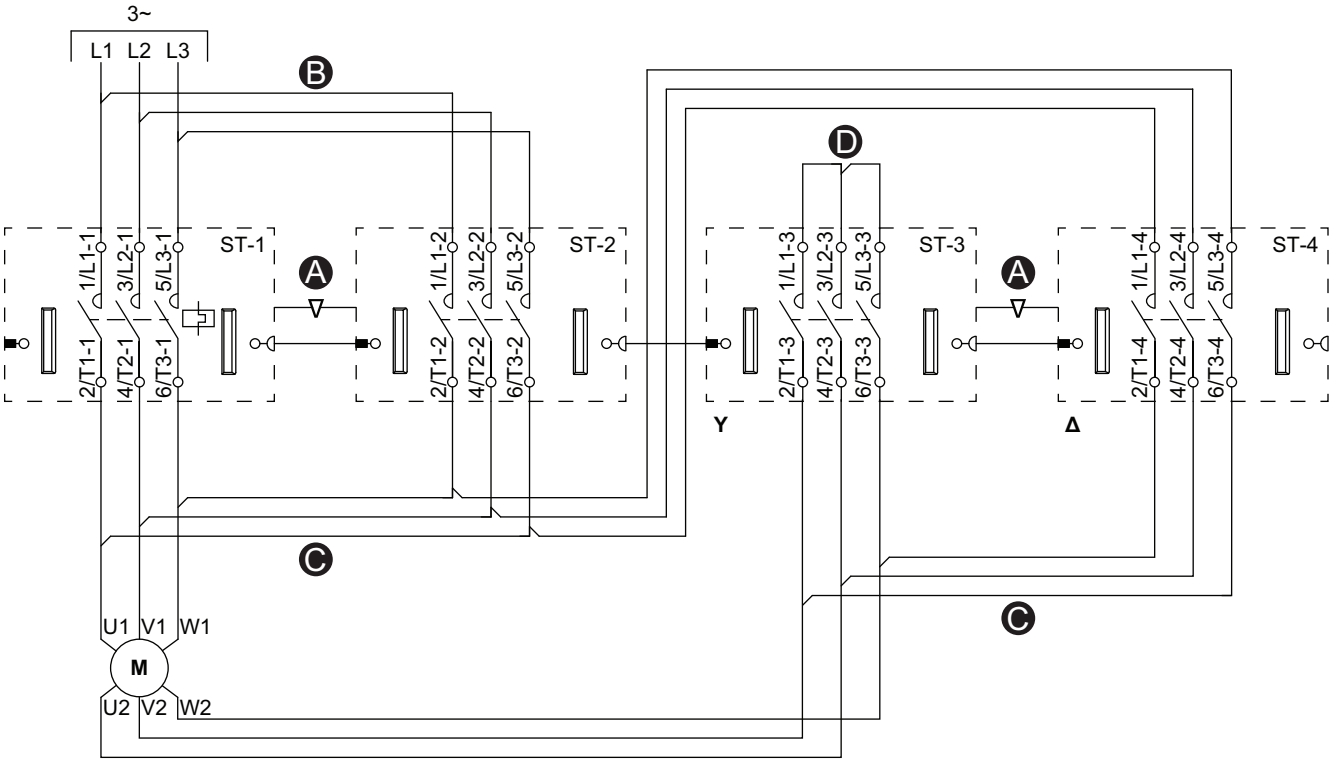

Accessories

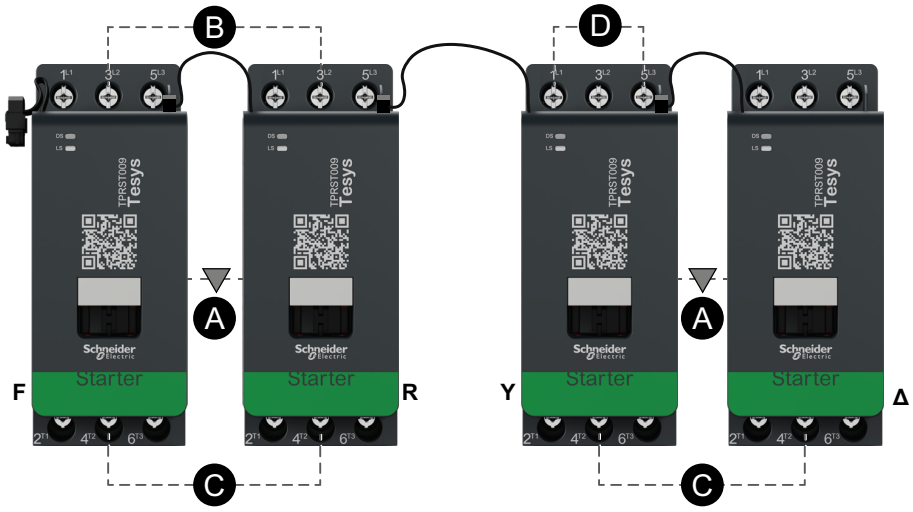

Legend

A	Mechanical interlock
B	Parallel link
C	Reversing link
D	Shorting block
F	Forward
R	Reverse
Y	Wye
Δ	Delta
ST-1	Starter 1
ST-2	Starter 2
ST-3	Starter 3
ST-4	Starter 4

Motor Two Speeds

Two Speed Wiring

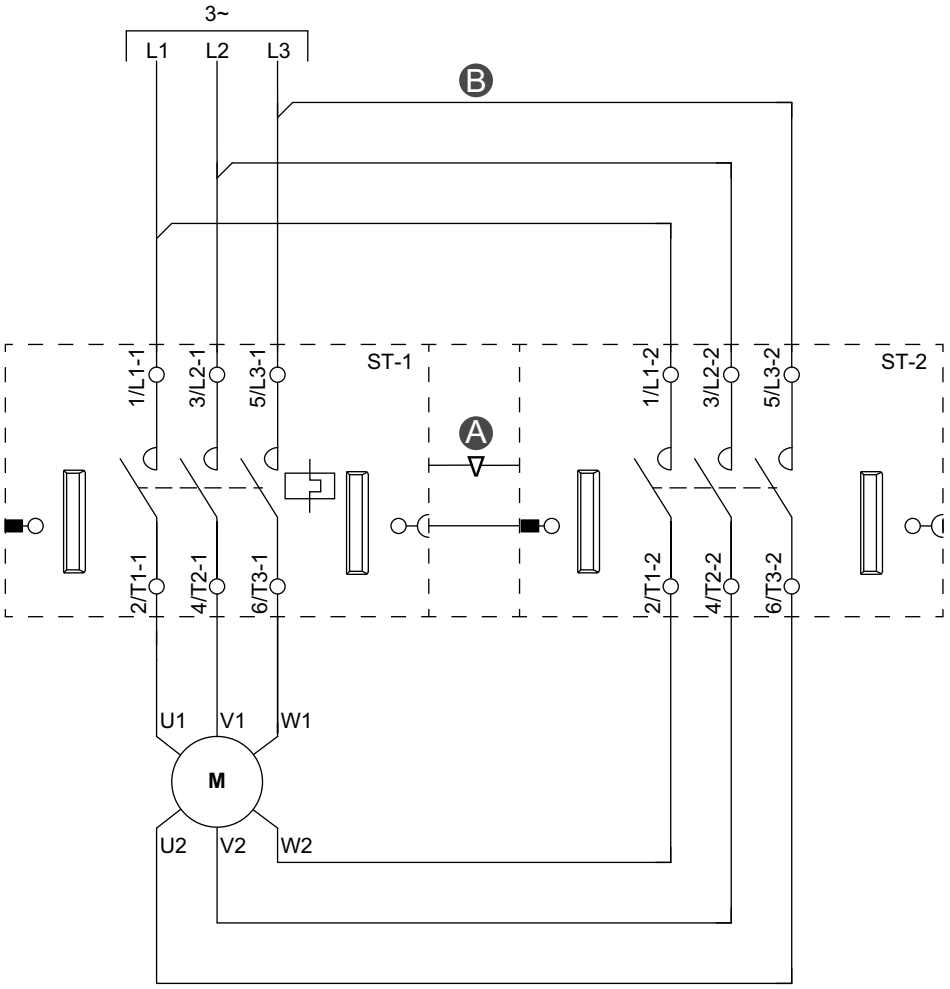

Accessories

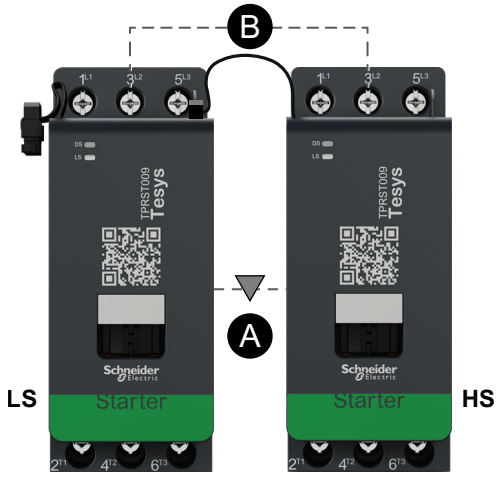

Legend

A	Mechanical interlock
B	Parallel link
LS	Low speed
HS	High speed
ST-1	Starter 1
ST-2	Starter 2

Motor Two Speeds with Dahlandar Option

Wiring (See Legend Table below.)

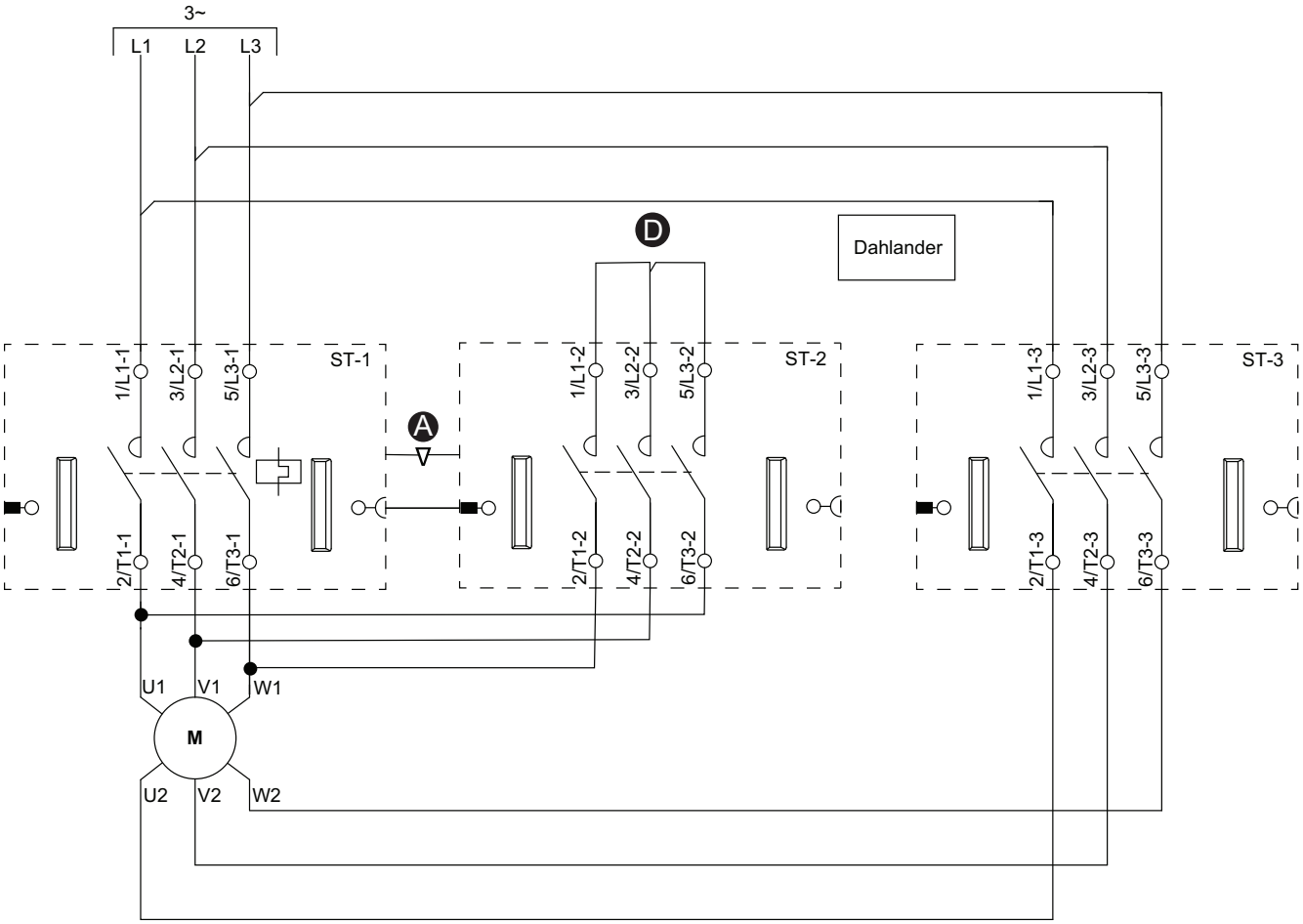

Accessories

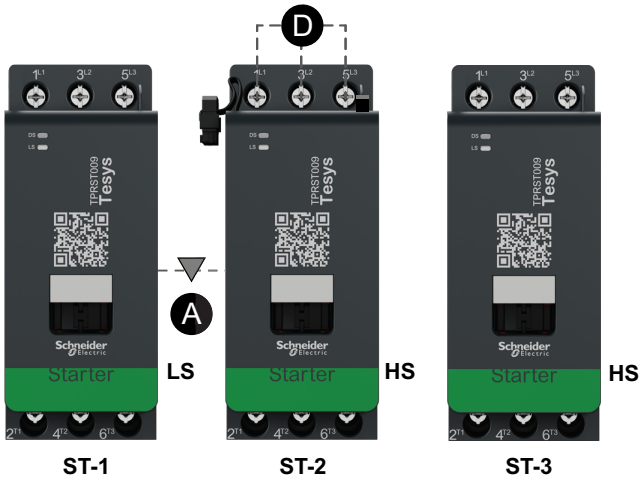

Legend

A	Mechanical interlock
D	Shorting block
LS	Low speed
HS	High speed
ST-1	Starter 1
ST-2	Starter 2
ST-3	Starter 3

Motor Two Speeds - SIL Stop, W. Cat 1/2

NOTE: Safety Integrity Level according to standard IEC 61508. Wiring Category 1 and Category 2 according to ISO 13849.

Two Speed Wiring

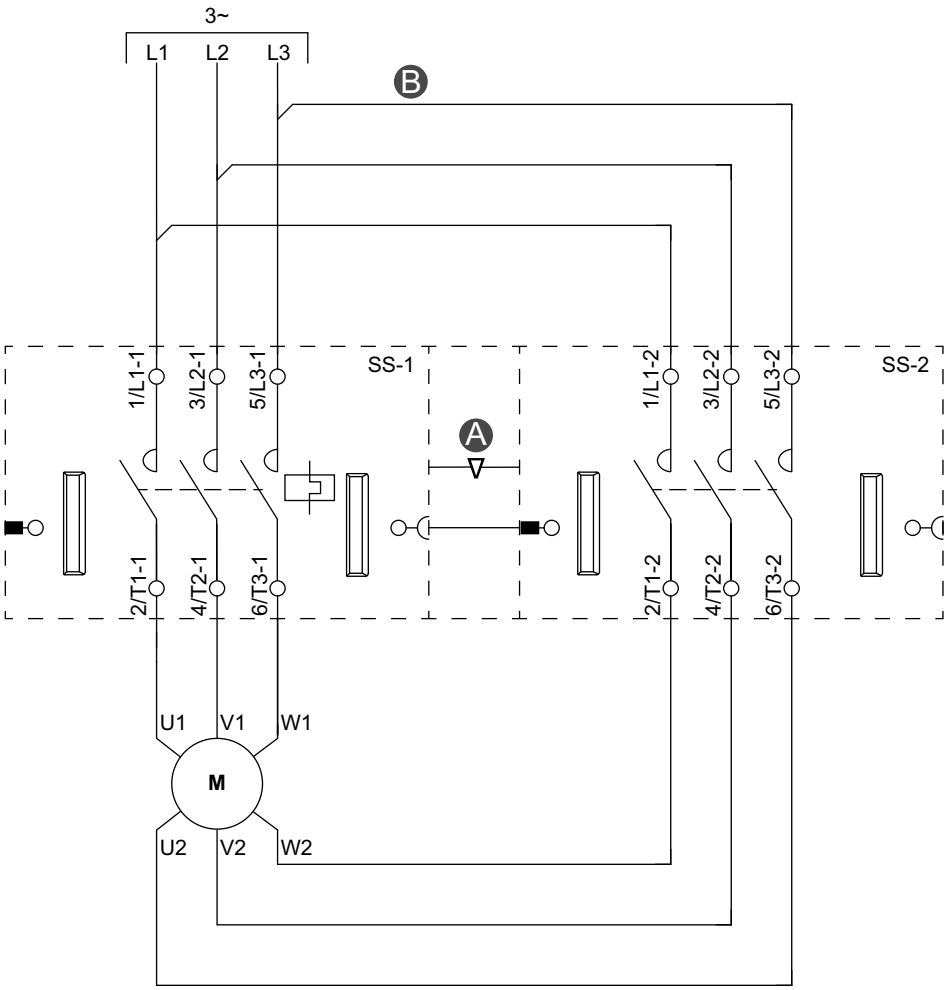

Accessories

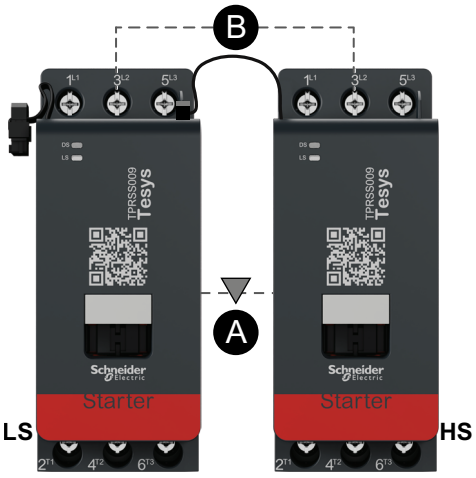

Legend

A	Mechanical interlock
B	Parallel link
LS	Low speed
HS	High speed
SS-1	SIL starter 1
SS-2	SIL starter 2

Motor Two Speeds - SIL Stop, W. Cat 3/4

NOTE: Safety Integrity Level according to standard IEC 61508. Wiring Category 3 and Category 4 according to ISO 13849.

Two Speed Wiring

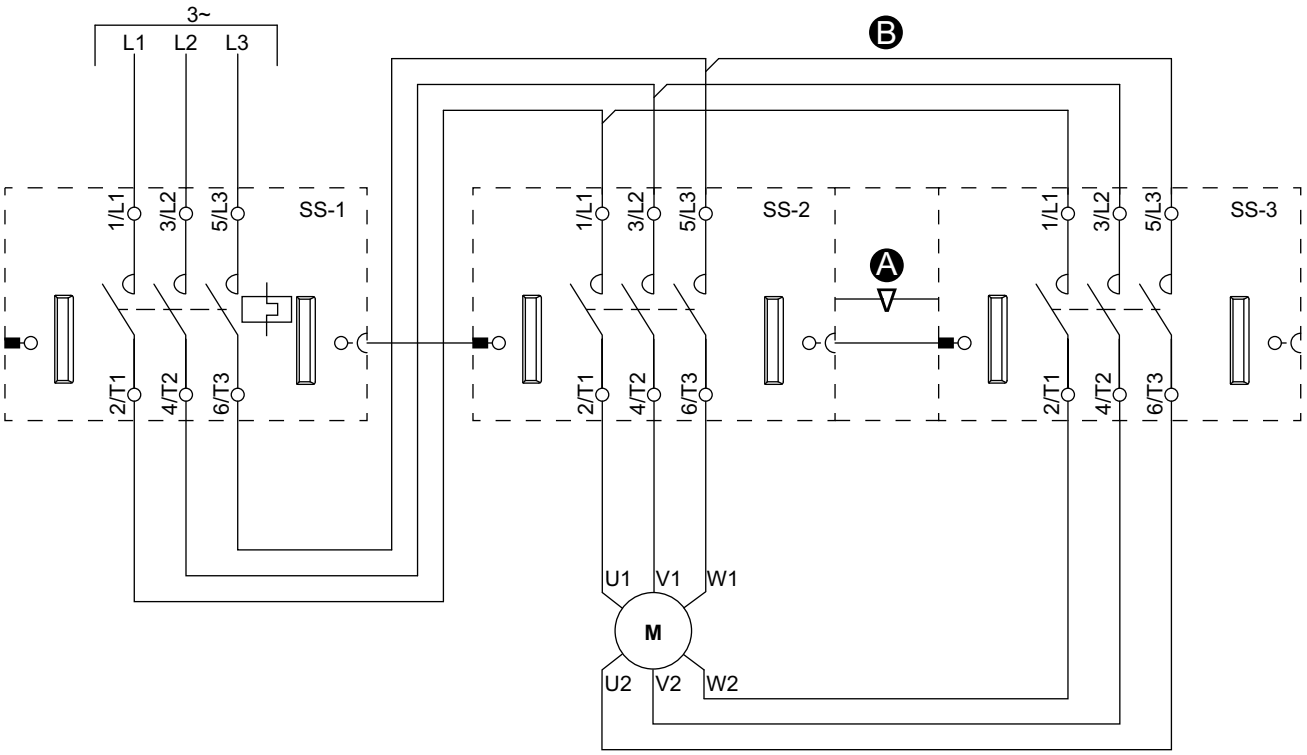

Accessories

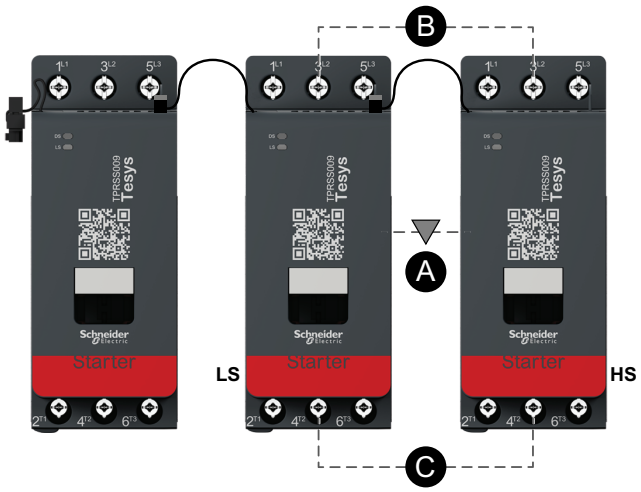

Legend

A	Mechanical interlock
B	Parallel link
LS	Low speed
HS	High speed
SS-1	SIL starter 1
SS-2	SIL starter 2
SS-3	SIL starter 3

Motor Two Speeds Two Directions

Two Speed Wiring

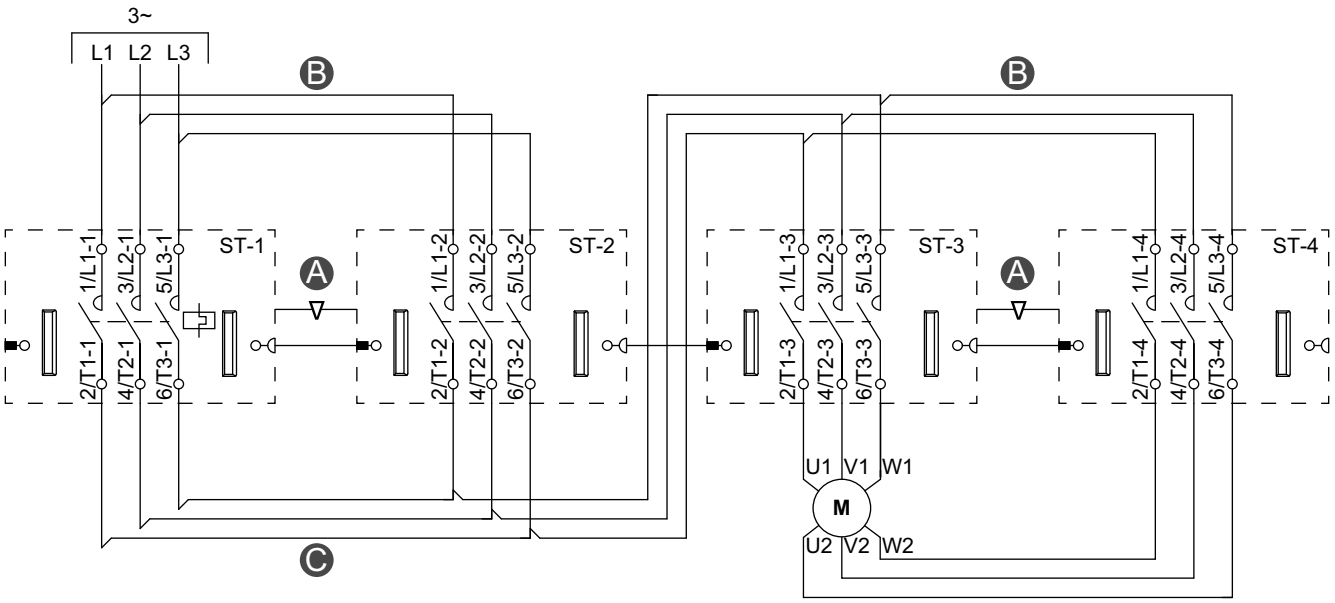

Accessories

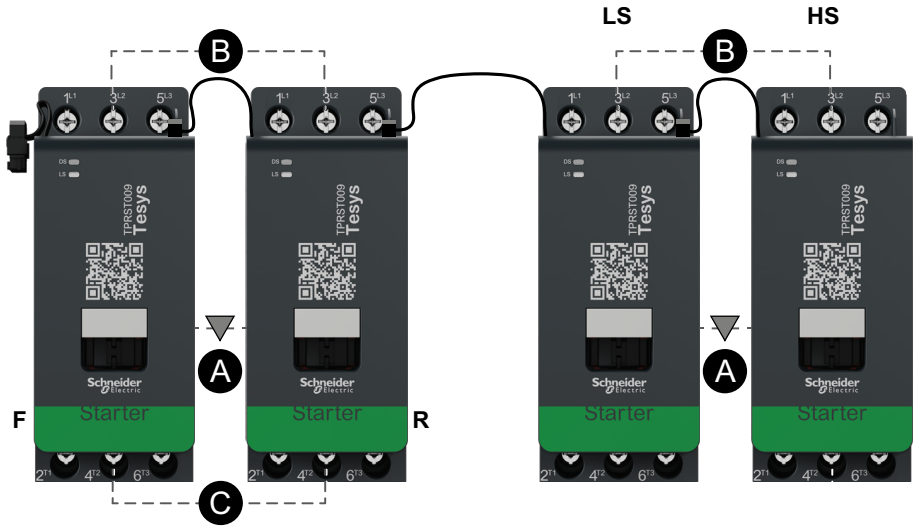

Legend

A	Mechanical interlock
B	Parallel link
C	Reversing link
F	Forward
R	Reverse
LS	Low speed
HS	High speed
ST-1	Starter 1
ST-2	Starter 2
ST-3	Starter 3
ST-4	Starter 4

Motor Two Speeds Two Directions - SIL Stop, W. Cat 1/2

NOTE: Safety Integrity Level according to standard IEC 61508. Wiring Category 1 and Category 2 according to ISO 13849.

Two Speed Wiring

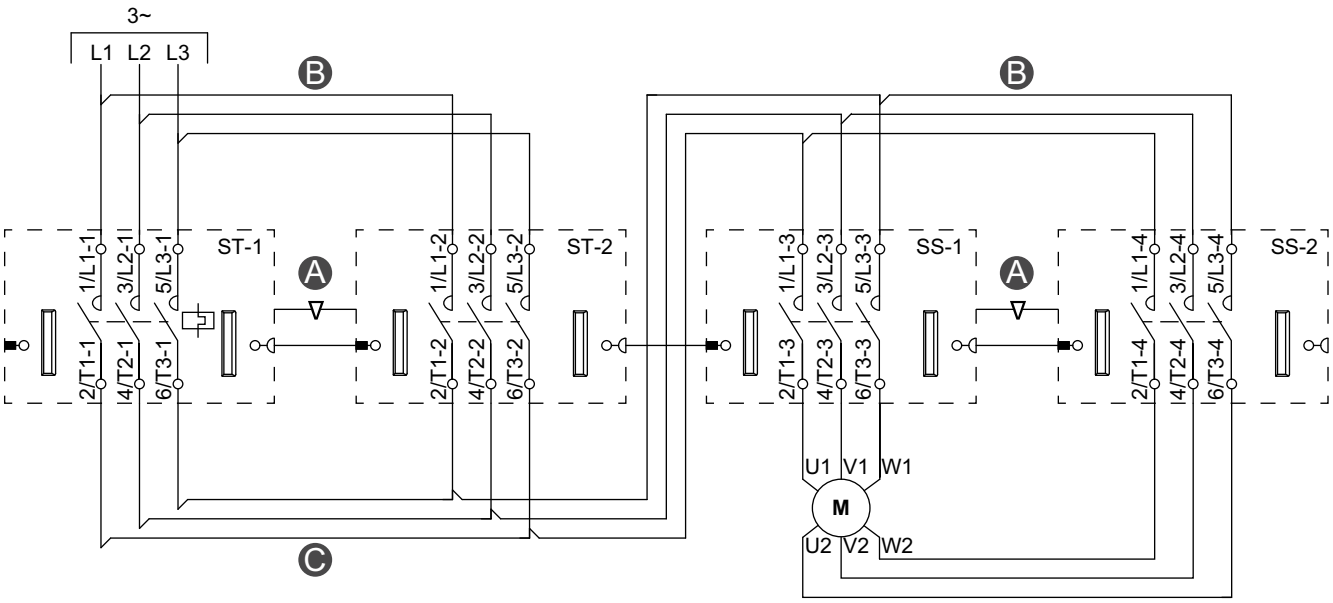

Accessories

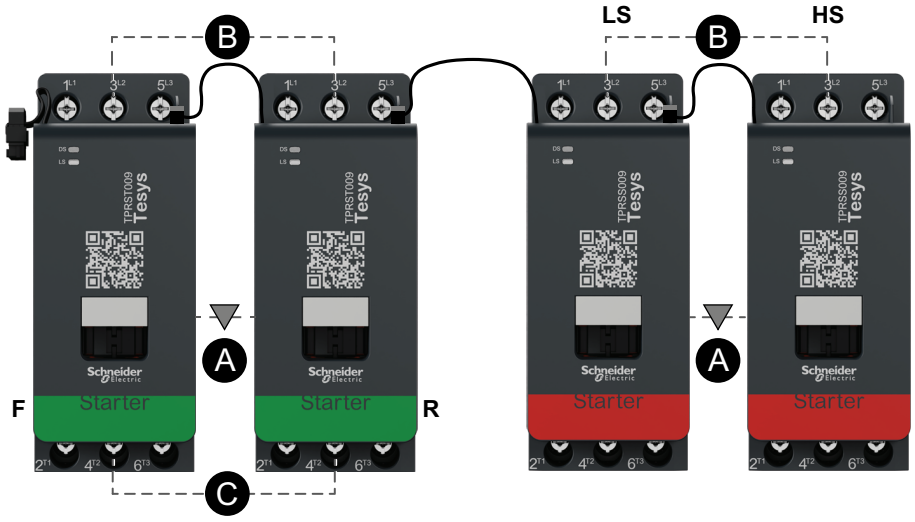

Legend

A	Mechanical interlock
B	Parallel link
C	Reversing link
F	Forward starter
R	Reverse starter
LS	Low speed
HS	High speed
ST-1	Starter 1
ST-2	Starter 2
SS-1	SIL starter 1
SS-2	SIL starter 2

Motor Two Speeds Two Directions - SIL Stop, W. Cat 3/4

NOTE: Safety Integrity Level according to standard IEC 61508. Wiring Category 3 and Category 4 according to ISO 13849.

Two Speed Wiring

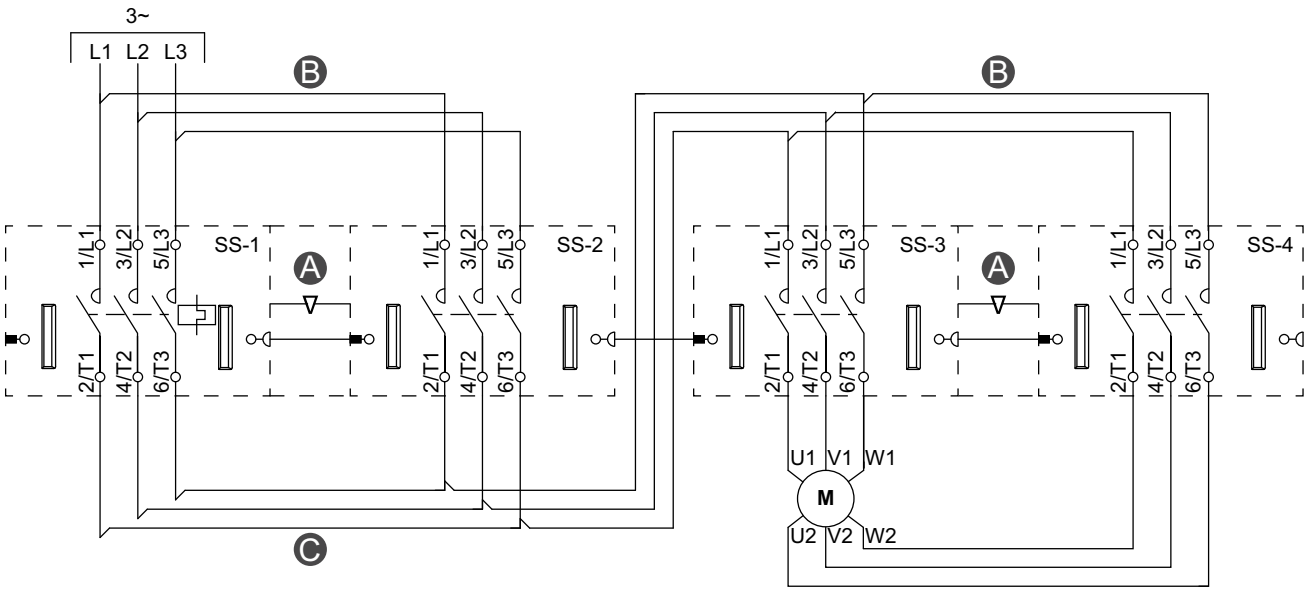

Accessories

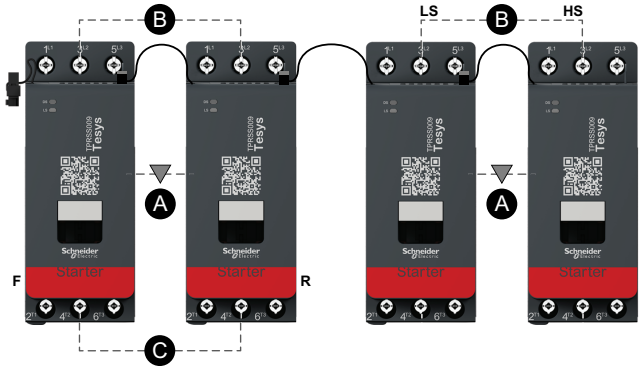

Legend

A	Mechanical interlock
B	Parallel link
C	Reversing link
F	Forward starter
R	Reverse starter
LS	Low speed
HS	High Speed
SS-1	SIL starter 1
SS-2	SIL starter 2
SS-3	SIL starter 3
SS-4	SIL starter 4

Resistor

Wiring

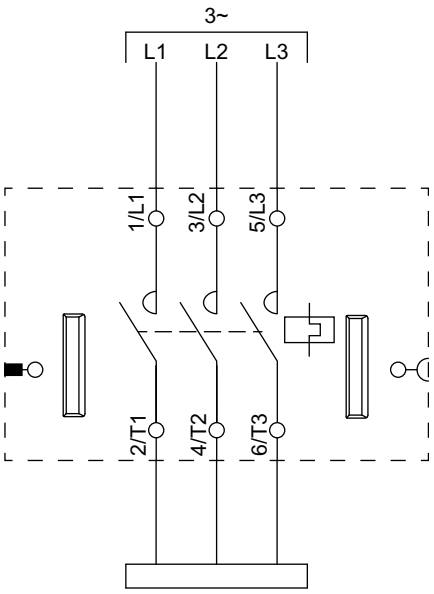

Power Supply

Wiring

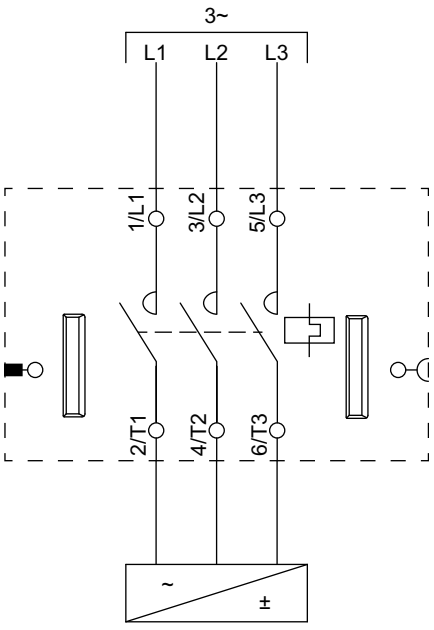

Transformer

Wiring

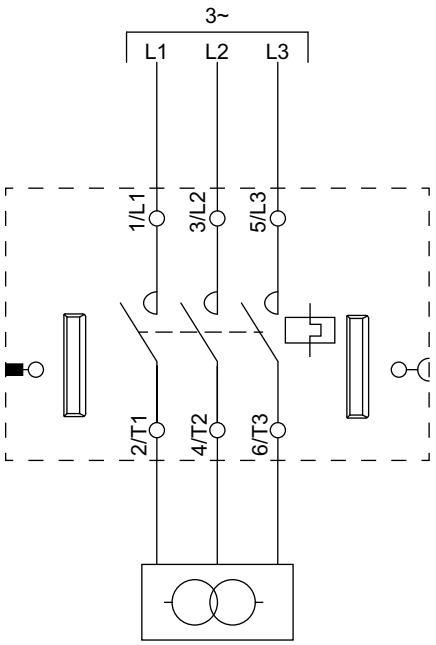

Pump & Ventilator

Wiring

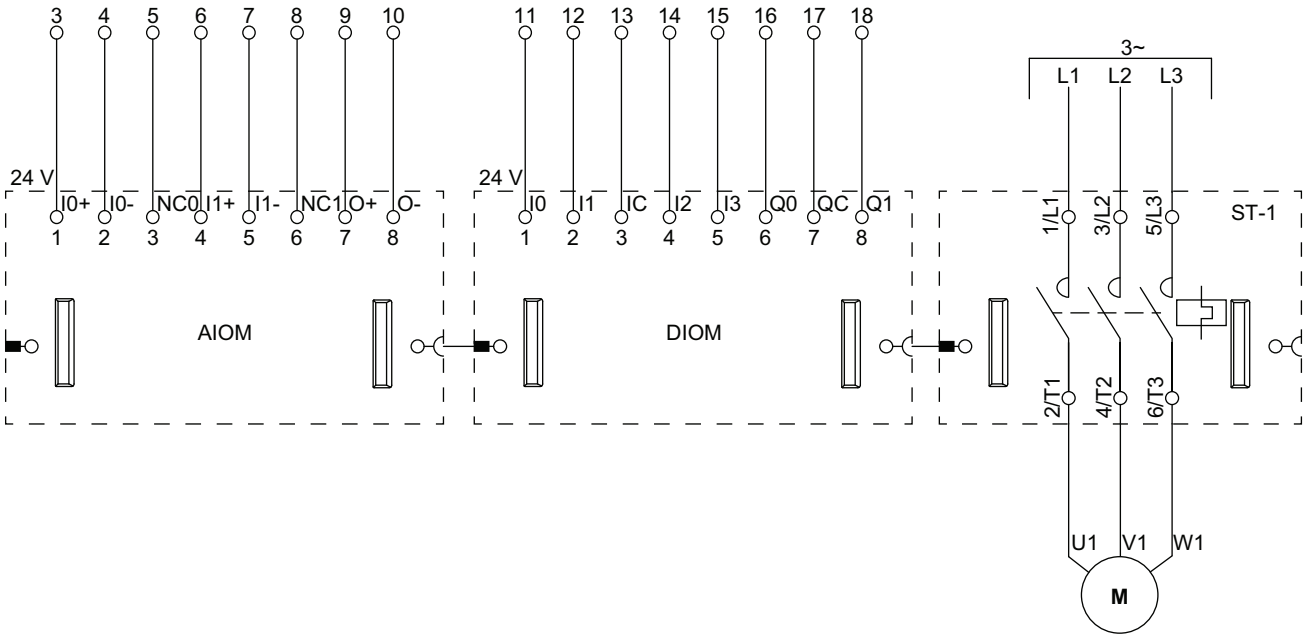

NOTE: Analog I/O modules (AIOMs) and digital I/O modules (DIOMs) are configurable.

Conveyor One Direction

Wiring

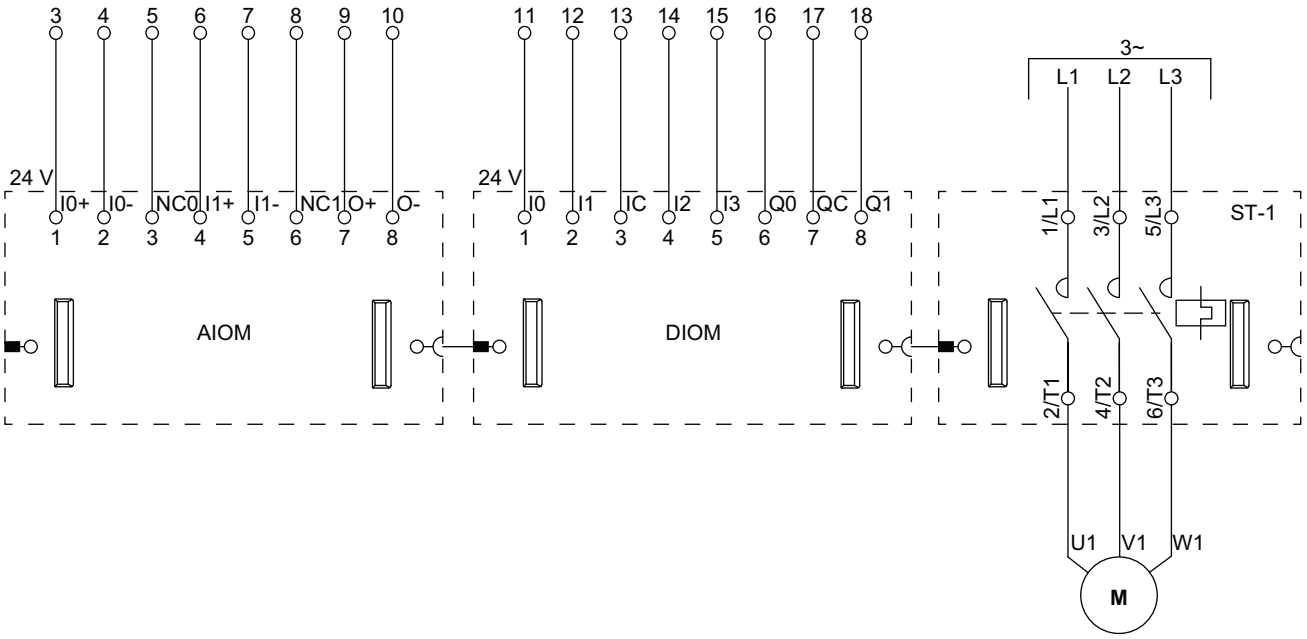

NOTE: Analog I/O modules (AIOMs) and digital I/O modules (DIOMs) are configurable.

Conveyor One Direction - SIL Stop, W. Cat 1/2

Safety Integrity Level according to standard IEC 61508. Wiring Category 1 and Category 2 according to ISO 13849.

Wiring

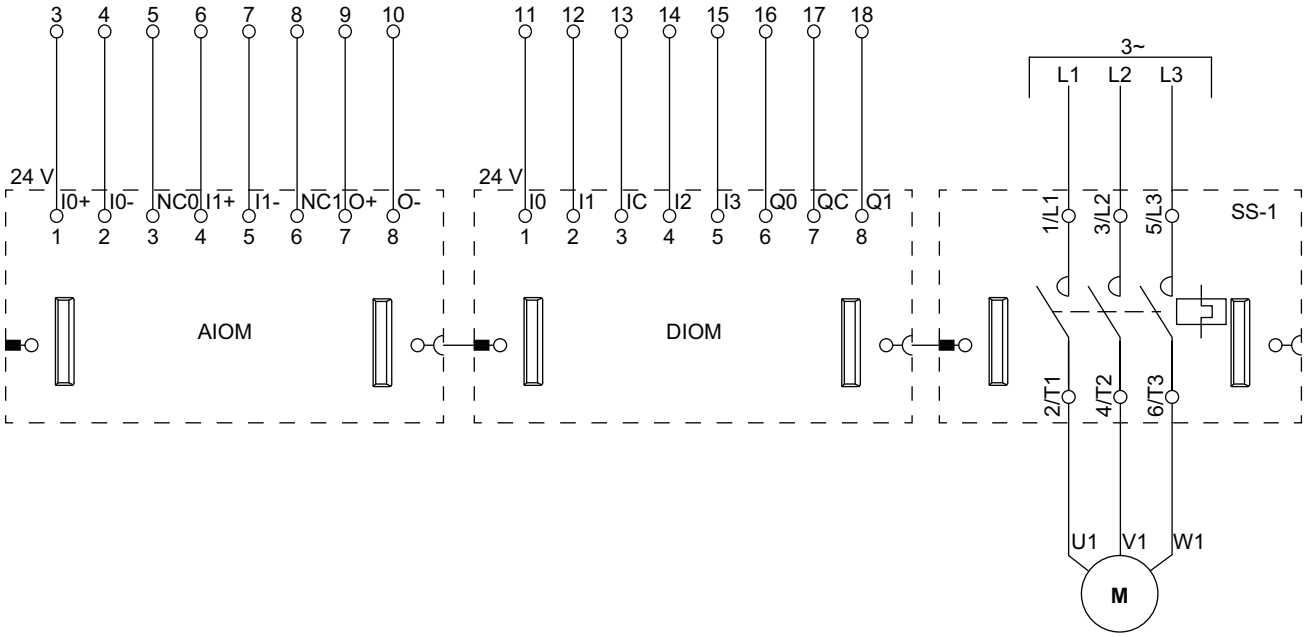

NOTE: Analog I/O modules (AIOMs) and digital I/O modules (DIOMs) are configurable.

Conveyor Two Directions

Wiring (See Legend Table below)

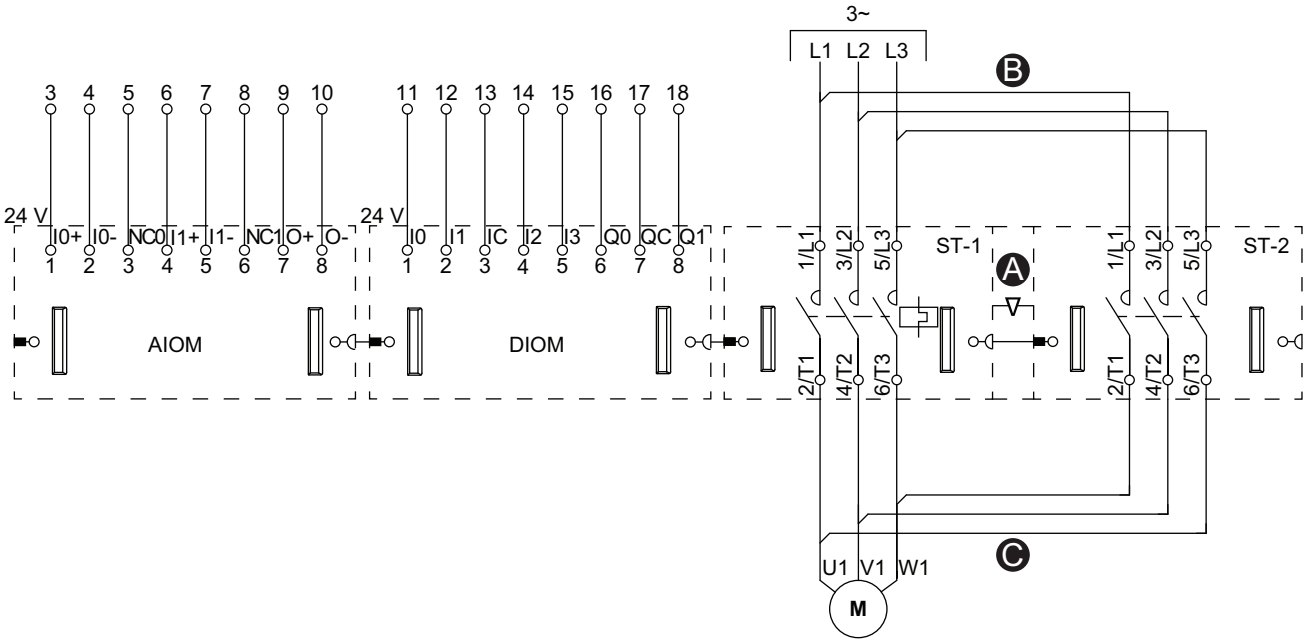

NOTE: Analog I/O modules (AIOMs) and digital I/O modules (DIOMs) are configurable.

Accessories

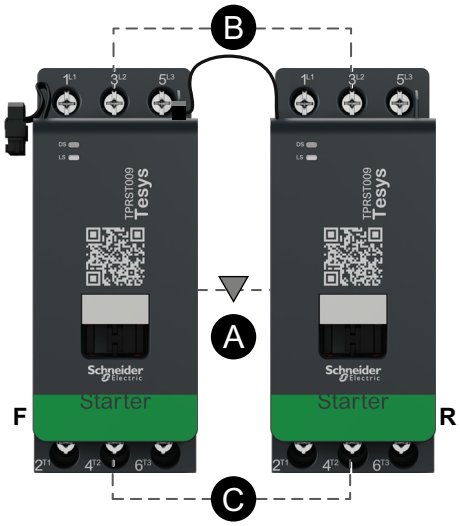

Legend

A	Mechanical interlock
B	Parallel link
C	Reversing link
F	Forward starter
R	Reverse starter
ST-1	Starter 1
ST-2	Starter 2

Conveyor Two Directions - SIL Stop, W. Cat 1/2

Safety Integrity Level according to standard IEC 61508. Wiring Category 1 and Category 2 according to ISO 13849.

Wiring (See Legend Table below)

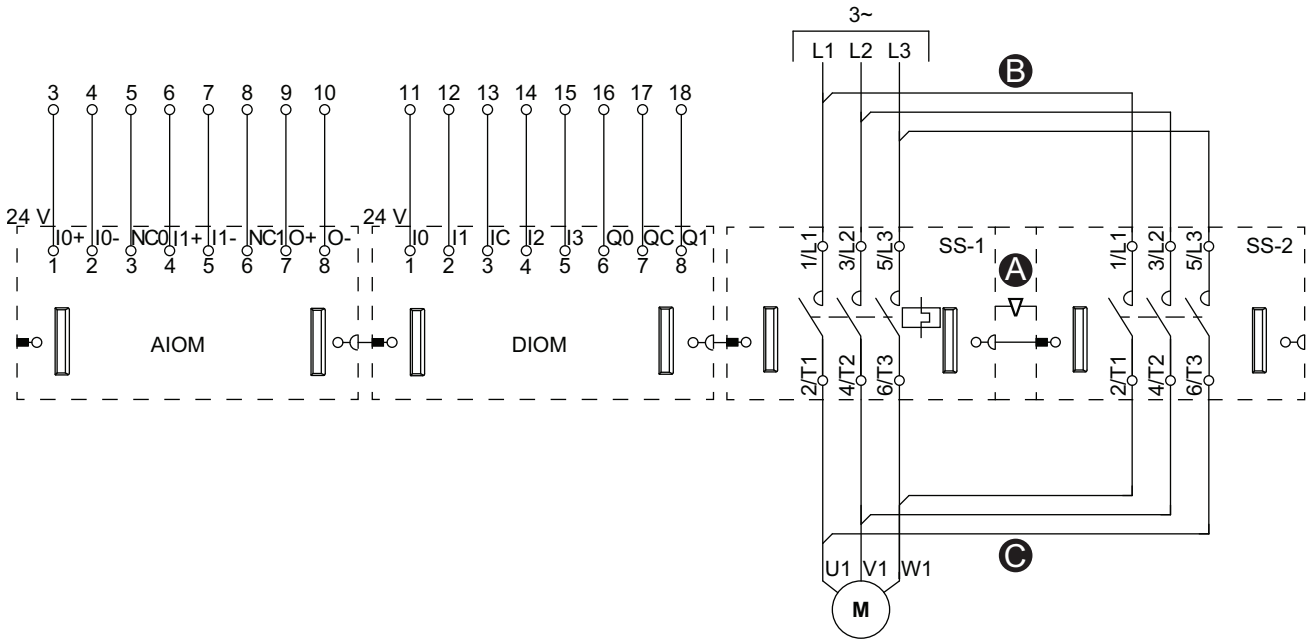

NOTE: Analog I/O modules (AIOMs) and digital I/O modules (DIOMs) are configurable.

Accessories

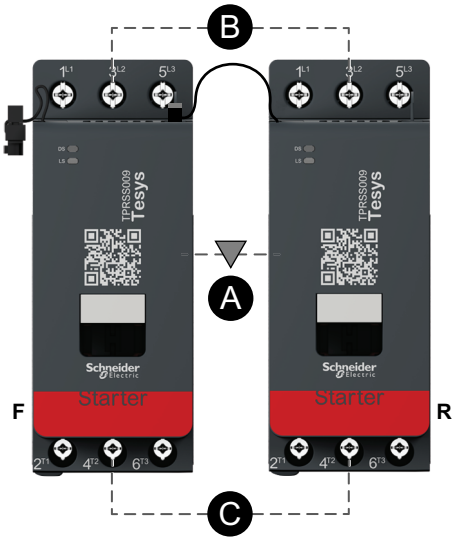

Legend

A	Mechanical interlock
B	Parallel link
C	Reversing link
F	Forward
R	Reverse
SS-1	SIL starter 1
SS-2	SIL starter 2

Schneider Electric Industries SAS
1884 Boulevard de la Défense
92000 Nanterre
France

www.se.com

© 2026 Schneider Electric. All rights reserved.

DOCA0270EN-05