EAV3832103

# Altivar

# Passive Filters

## VW3A46101 ... A46176

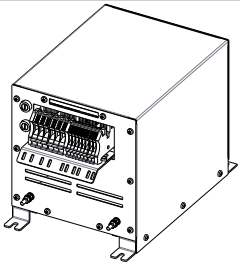

## ⚠⚠ DANGER

**HAZARD OF ELECTRIC SHOCK, EXPLOSION, OR ARC FLASH**

- Only appropriately trained persons who are familiar with and fully understand the contents of the present manual and all other pertinent product documentation and who have received all necessary training to recognize and avoid hazards involved are authorized to work on and with this equipment.
- Installation, adjustment, repair, and maintenance must be performed by qualified personnel.
- Verify compliance with all local and national electrical code requirements as well as all other applicable regulations with respect to grounding of all equipment.
- Before performing work and/or applying voltage on the equipment, follow the instructions given in the appropriate installation manual.

**Failure to follow these instructions will result in death or serious injury.**

## ⚠ CAUTION



**SHARP EDGES**

Use all necessary personal protective equipment (PPE) such as gloves when performing any type of work whatsoever on or with this product.

**Failure to follow these instructions can result in injury or equipment damage.**

Electrical equipment should be installed, operated, serviced, and maintained only by qualifed personnel. No responsibility is assumed by Schneider Electric for any consequences arising out of the use of this product.

© 2026 Schneider Electric. All Rights Reserved.

UK CA

**MANUFACTURER**
**Schneider Electric Industries SAS**
1884 Boulevard de la Défense
92000 Nanterre France

**UK REPRESENTATIVE**
**Schneider Electric Limited**
Stafford Park 5
Telford, TF3 3BL United Kingdom

EAC

Опция для продуктов Altivar и Altistart. Пожалуйста, обратитесь к сообщению о преобразователе частоты EAC / программном сартере в приложении к началу работы,размещенном на веб-сайте производителя. Авторизованный поставщик в Республике Казахстан:
ТОО «Шнейдер Электрик»
Адрес: 050010, РК, г. Алматы, пр. Достык, 38, бизнес-центр «Кен Дала», 5 этаж, левое крыло.
Тел.: +7 (727) 339 23 57
Номер службы поддержки клиентов:
Тел.: +7 (727) 339 24 52

Altivar және Altistart өніміне арналған опция. Өндірушінің веб-сайтында орналастырылған «Жұмысқа кірісу» қосымшасындағы EAC жиілік инвертер / бірқалыпты іске қосу құрылғысы хабарламасына сілтеме жасауыңызды сұраймыз.
Қазақстан Республикасындағы уәкілетті жеткізуші:
ЖШС «Шнейдер Электрик»
Мекен-жайы: 050010, ҚР, Алматы қаласы, Достық даңғылы, 38, «Кең дала» бизнес орталығы, 5-қабат, сол қанат.
тел.: +7 (727) 339 23 57
Клиенттерге қызмет көрсету нөмірі:
тел.: +7 (727) 339 24 52

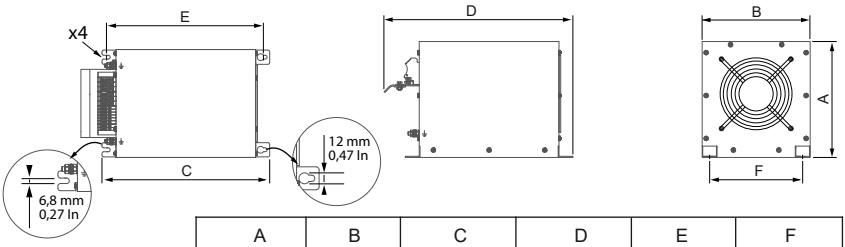


| VW3A461●● | A | | B | | C | | D | | E | | F | |
|---|---|---|---|---|---|---|---|---|---|---|---|---|
| | mm | in | mm | in | mm | in | mm | in | mm | in | mm | in |
| 01 ... 03, 20 ... 22, 39 ... 41, 58 ... 60 | 205.5 | 8.09 | 190 | 7.48 | 295 | 11.61 | 332.11 | 13.07 | 276 | 10.87 | 163 | 6.42 |
| 04, 05, 23, 24, 42, 43, 61, 62 | 247.5 | 9.74 | 232 | 9.13 | 399.55 | 15.73 | 436.11 | 17.17 | 380 | 14.96 | 205 | 8.07 |

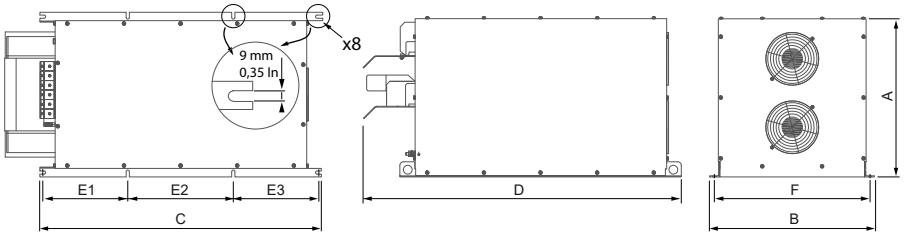


| VW3A461●● | A | | B | | C | | D | | E1 | | E2 | | E3 | | F | |
|---|---|---|---|---|---|---|---|---|---|---|---|---|---|---|---|---|
| | mm | in | mm | in | mm | in | mm | in | mm | in | mm | in | mm | in | mm | in |
| 06, 07, 25, 26, 44 ... 46, 63 ... 65 | 242 | 9.53 | 378 | 14.88 | 547 | 21.54 | 594.08 | 23.39 | 145 | 5.71 | 233 | 9.17 | 145 | 5.71 | 353 | 13.90 |
| 08, 09, 27, 28, 47, 48, 66, 67 | 333 | 13.11 | 378 | 14.88 | 577 | 22.72 | 623.6 | 24.55 | 156.5 | 6.16 | 240 | 9.45 | 156.5 | 6.16 | 353 | 13.90 |
| 10, 11, 29, 30, 49, 50, 68, 69 | 333 | 13.11 | 418 | 16.46 | 685 | 26.97 | 736.8 | 29 | 212 | 8.35 | 240 | 9.45 | 212 | 8.35 | 393 | 15.47 |
| 12, 13, 31, 32 51, 52, 70, 71 | 400 | 15.75 | 418 | 16.46 | 685 | 26.97 | 767.6 | 30.22 | 212 | 8.35 | 240 | 9.45 | 212 | 8.35 | 393 | 15.47 |
| 14 ... 18, 33, 34 53 ... 56, 72, | 448.5 | 17.66 | 468 | 18.42 | 800 | 31.50 | 900.06 | 35.43 | 240 | 9.45 | 300 | 11.81 | 240 | 9.45 | 443 | 17.44 |
| 19, 35 ... 38, 57, 73 ... 76 | 510 | 20 | 468 | 18.42 | 800 | 31.50 | 900.06 | 35.43 | 240 | 9.45 | 300 | 11.81 | 240 | 9.45 | 443 | 17.44 |

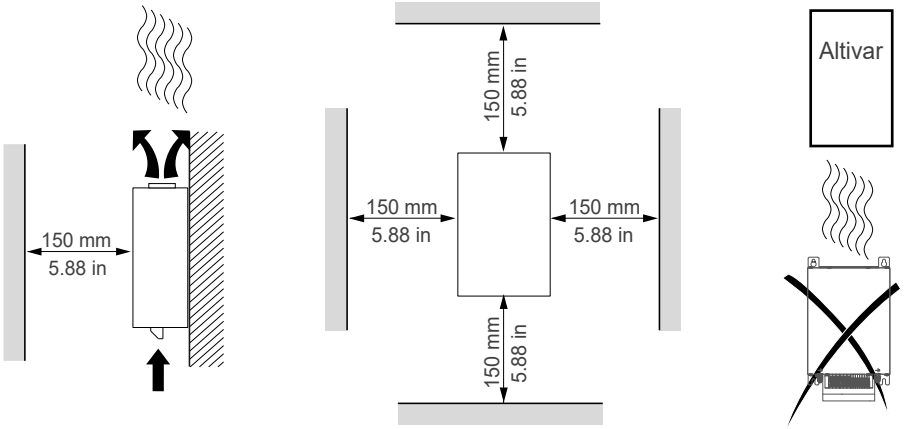

| VW3A461●● | N.m / lb.in | | | | | | | | Wiring diagrams |
|---|---|---|---|---|---|---|---|---|---|
| | X1-1 ... X2-3 | | 2 PE ⏚ | | A, B | | X3-1 ... X4-3 | | |
| 01...03, 20...22, 39...41, 58...60 | 0.5 ... 10 mm² 26 ... 8 AWG | 1.4 Nm 12.4 lb.in | M6x30 | 4 Nm 35.4 lb.in | 2.5 mm² 14 AWG | 0.8 Nm 7.1 lb.in | 0.5 ... 4 mm² 20 ... 12 AWG | 0.8 Nm 7.1 lb.in | 1 or 2 |
| 04, 05, 23, 24, 42, 43, 61, 62 | 0.5 ... 10 mm² 26 ... 8 AWG | 1.4 Nm 12.4 lb.in | M6x30 | 4 Nm 35.4 lb.in | 2.5 mm² 14 AWG | 0.8 Nm 7.1 lb.in | 0.5 ... 4 mm² 20 ... 12 AWG | 0.8 Nm 7.1 lb.in | |
| 06, 07, 25, 26, 44, 45, 63, 64 | 1.5 ... 25 mm² 14 ... 6 AWG | 3.5 Nm 31 lb.in | M8x40 | 9 Nm 79.6 lb.in | 2.5 mm² 14 AWG | 0.8 Nm 7.1 lb.in | 1.5 ... 16 mm² 16 ... 6 AWG | 2.4 Nm 21.2 lb.in | |
| 46, 65 | 1.5 ... 25 mm² 14 ... 6 AWG | 3.5 Nm 31 lb.in | M8x40 | 9 Nm 79.6 lb.in | 2.5 mm² 14 AWG | 0.8 Nm 7.1 lb.in | 1.5 ... 16 mm² 16 ... 6 AWG | 2.4 Nm 21.2 lb.in | 2 |
| 08, 09, 27, 28, 47, 48, 66, 67 | 2.5 ... 50 mm² 12 ... 1 AWG | 4.5 Nm 39.8 lb.in | M8x40 | 9 Nm 79.6 lb.in | 2.5 mm² 14 AWG | .0.8 Nm 7.1 lb.in | 1.5 ... 25 mm² 16 ... 4 AWG | 3.5 Nm 31 lb.in | |
| 10, 11, 29, 30, 49, 50, 68, 69 | 10 ... 70 mm² 8 ... 0 AWG | 5.4 Nm 47.8 lb.in | M8x40 | 9 Nm 79.6 lb.in | 2.5 mm² 14 AWG | 0.8 Nm 7.1 lb.in | 1.5 ... 25 mm² 16 ... 4 AWG | 3.5 Nm 31 lb.in | |
| 12, 13, 31, 32 51, 52, 70, 71 | 2.5 ... 90 mm² 14 ... 00 AWG | 10 Nm 88.5 lb.in | M8x40 | 9 Nm 79.6 lb.in | 2.5 mm² 14 AWG | 0.8 Nm 7.1 lb.in | 1.5 ... 50 mm² 16 ... 1 AWG | 4 Nm 35.4 lb.in | |
| 14...18, 33, 34 53...56, 72, | 25 ... 300 mm² 6 ... 600 AWG | 50 Nm 442.5 lb.in | M12x45 | 30 Nm 265.5 lb.in | 2.5 mm² 14 AWG | 0.8 Nm 7.1 lb.in | 16 ... 150 mm² 6 ... 300 AWG | 18 Nm 159.3 lb.in | |
| 19, 35...38, 57, 73...76 | 25 ... 300 mm² 6 ... 600 AWG | 50 Nm 442.5 lb.in | M12x45 | 30 Nm 265.5 lb.in | 2.5 mm² 14 AWG | 0.8 Nm 7.1 lb.in | 16 ... 150 mm² 6 ... 300 AWG | 18 Nm 159.3 lb.in | |

**Wiring diagram 1** – With shunt
(which connect internal capacitors of the filter)

**NOTICE**

**OVERVOLTAGE AT THE POWER ON**

This wiring diagram with shunt must not be used for VW3A461●●:
08...19, 27...38, 46...57, 65...76

**Failure to follow these instructions can result in equipment damage.**

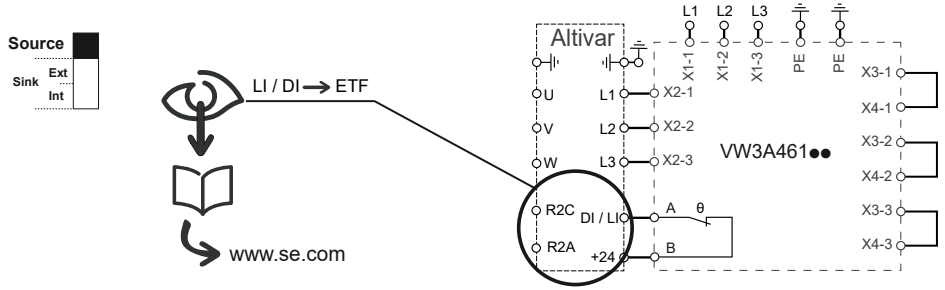


**Wiring diagram 2** – With capacitor contactor
(which disconnect internal capacitors of the filter at standstill)

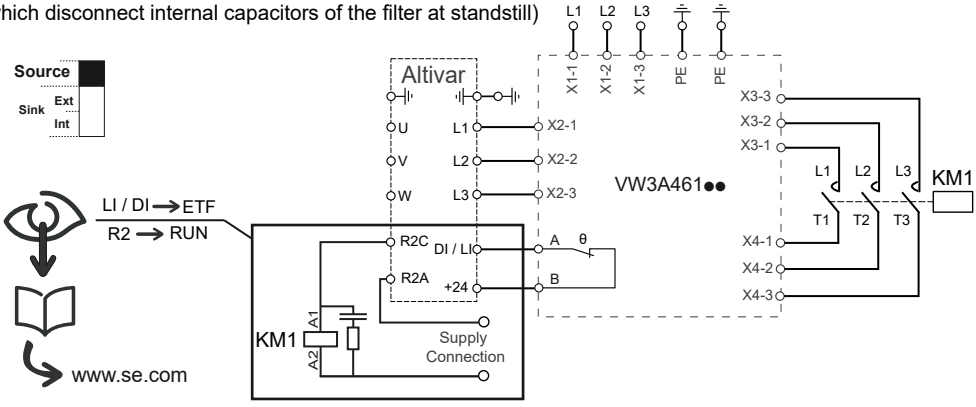

# Capacitor Contactor

It is used to reduce the reactive current and prevent an overcompensation of the mains at standby operation.

**NOTICE**

**CAPACITOR CONTACTOR DAMAGE**

- It is advisable to use a special capacitor contactor to manage the C-disconnection.
- Without using a special capacitor contactor, you must adapt your wiring diagram to wait 25 secondes after having opened the contactor, to allow the complete discharge of the internal capacitors of the filter, before restarting.

**Failure to follow these instructions can result in equipment damage.**

Follow this table to select the contactor :

| Nominal Current (A) | | Contactor Nominal Power (kVAr) |
|---|---|---|
| at 380-415V (50-60Hz) | at 440-480V (60Hz) | |
| 6 | 6 | 1 |
| 10 | 10 | 1 |
| 14 | 14 | 2 |
| 22 | 19 | 4 |
| 29 | 25 | 6 |
| 35 | 31 | 7 |
| 43 | 36 | 7 |
| 58 | 48 | 9 |
| 72 | 60 | 11 |
| 86 | 73 | 15 |
| 101 | 95 | 17 |
| 144 | 118 | 22 |
| 180 | 154 | 29 |
| 217 | 183 | 36 |
| 252 | 231 | 44 |
| 304 | 291 | 51 |
| 325 | 355 | 58 |
| 380 | 380 | 66 |
| 433 | 436 | 88 |

# Set parameter [Input Filter] IFI to [Yes]

**NOTICE**

**RIPPLE ON THE DC BUS**

Before power-on, follow the steps below:

1) Refer to the product programming manual and enter the correct motor parameters.
2) Run [Autotuning] tun.
3) Find [Input Filter] DCR- menu, set parameter [Input Filter] IFI to [Yes].

Contact Schneider Electric Customer Care Hotline on www.se.com/CCC if you have other questions.

**Failure to follow these instructions can result in equipment damage.**