EAV64375-02

Altivar Process
Fan size 4, 5, 6

VX5VPS5001

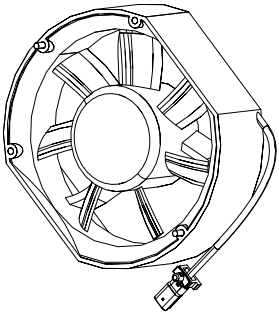

VX5VPS4001

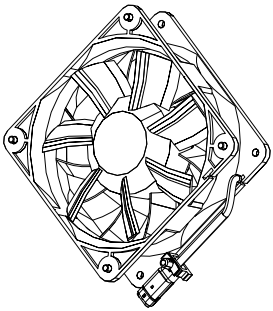

VX5VPS6001

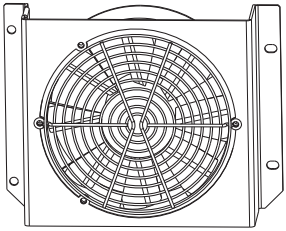

⚠ ⚠ DANGER

Only appropriately trained persons who are familiar with and understand the contents of this manual and all other pertinent product documentation and who have received safety training to recognize and avoid hazards involved are authorized to work on and with this drive system.
Installation, adjustment, repair and maintenance must be performed by qualified personnel.
• The system integrator is responsible for compliance with all local and national electrical code requirements as well as all other applicable regulations with respect to grounding of all equipment.
• Many components of the product, including the printed circuit boards, operate with mains voltage.
• Only use properly rated, electrically insulated tools and measuring equipment.
• Do not touch unshielded components or terminals with voltage present.
• Motors can generate voltage when the shaft is rotated. Prior to performing any type of work on the drive system, block the motor shaft to prevent rotation.
• AC voltage can couple voltage to unused conductors in the motor cable. Insulate both ends of unused conductors of the motor cable.
• Do not short across the DC bus terminals or the DC bus capacitors or the braking resistor terminals.
• Before performing work on the drive system:
- Disconnect all power, including external control power that may be present. Take into account that the circuit breaker or main switch does not de-energize all circuits.
- Place a Do Not Turn On label on all power switches related to the drive system.
- Lock all power switches in the open position.
- Wait 15 minutes to allow the DC bus capacitors to discharge.
- Follow the instructions given in the chapter "Verifying the Absence of Voltage" in the installation manual of the product.
• Before applying voltage to the drive system:
- Verify that the work has been completed and that the entire installation cannot cause hazards.
- If the mains input terminals and the motor output terminals have been grounded and short-circuited, remove the ground and the short circuits on the mains input terminals and the motor output terminals.
- Verify proper grounding of all equipment.
- Verify that all protective equipment such as covers, doors, grids is installed and/or closed.
Failure to follow these instructions will result in death or serious injury.

Electrical equipment should be installed, operated, serviced, and maintained only by qualifed personnel. No responsibility is assumed by Schneider Electric for any consequences arising out of the use of this product.
© 2017 Schneider Electric. All Rights Reserved.

1

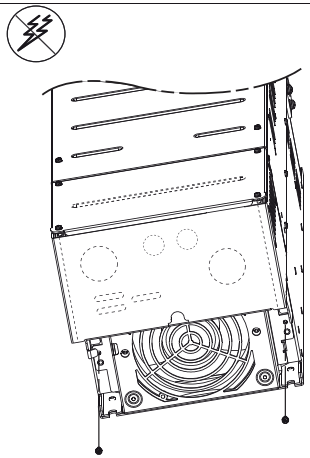

2

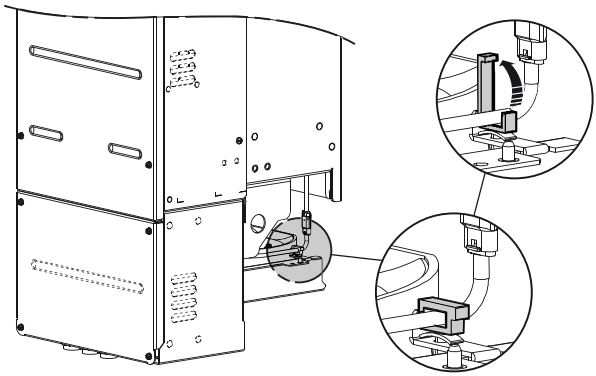

3

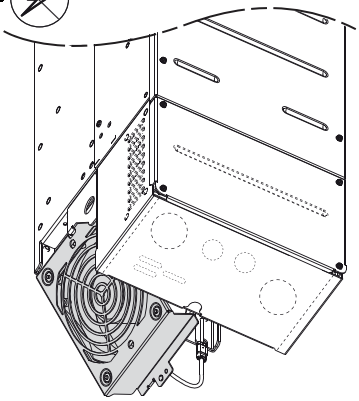

4

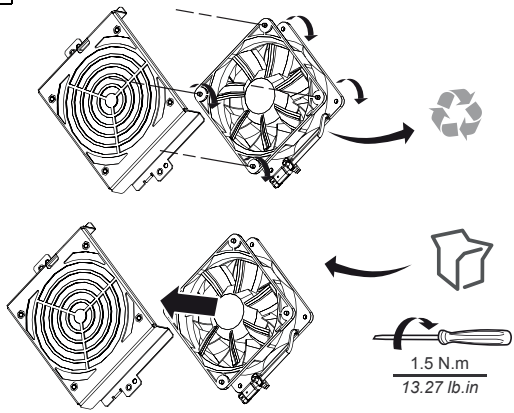

5

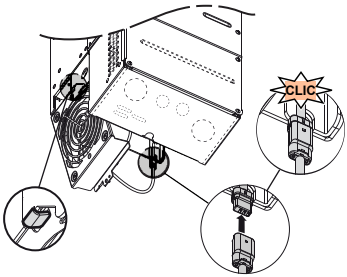

6

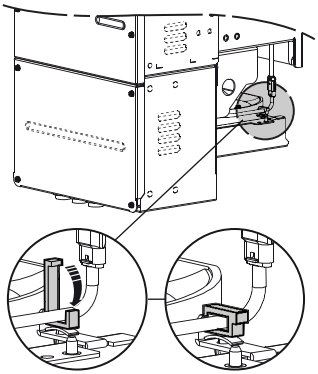

7

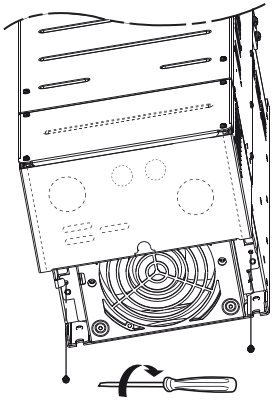

1

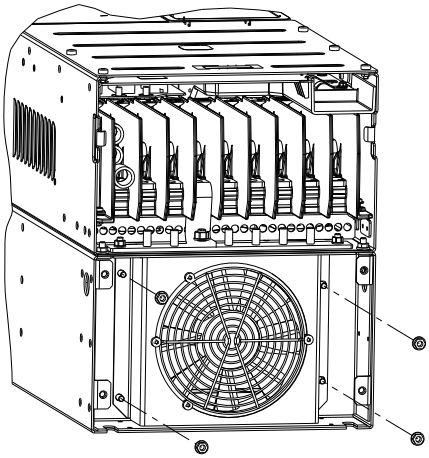

2

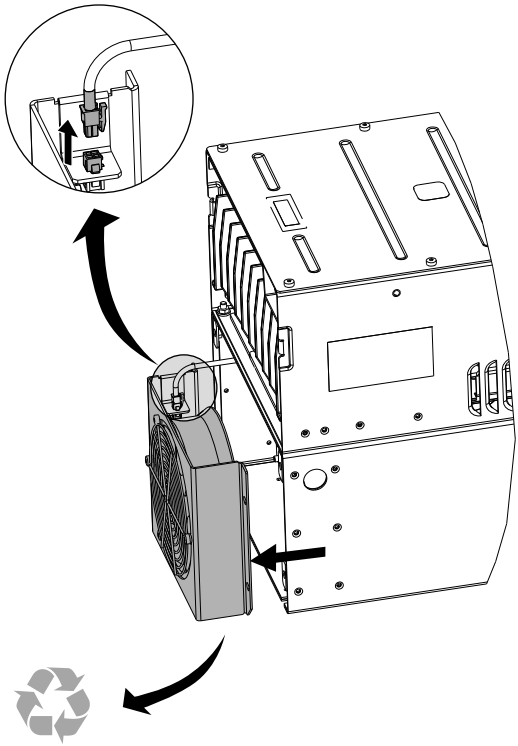

3

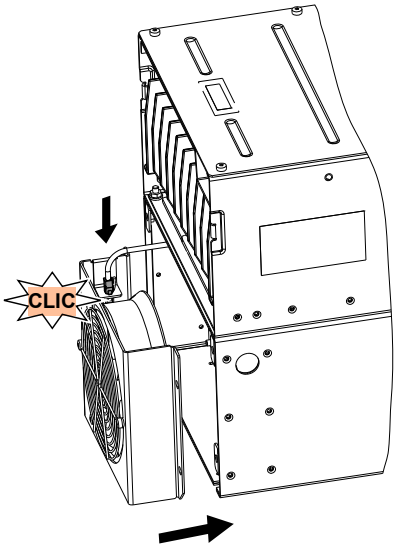
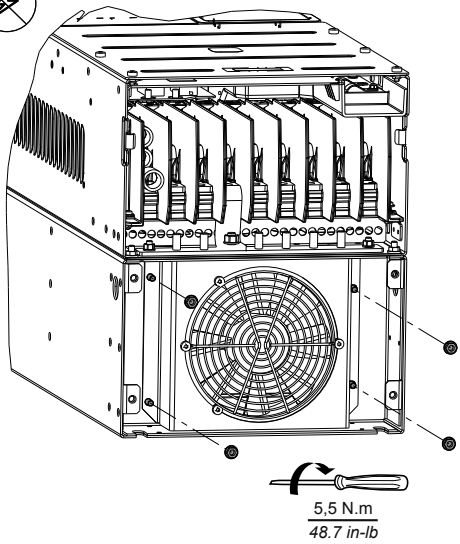
4