Modicon M100/M200 Logic Controller

Hardware Guide

EIO0000002023.06
7/2026

Legal Information

The information provided in this document contains general descriptions, technical characteristics and/or recommendations related to products/solutions.

This document is not intended as a substitute for a detailed study or operational and site-specific development or schematic plan. It is not to be used for determining suitability or reliability of the products/solutions for specific user applications. It is the duty of any such user to perform or have any professional expert of its choice (integrator, specifier or the like) perform the appropriate and comprehensive risk analysis, evaluation and testing of the products/solutions with respect to the relevant specific application or use thereof.

The Schneider Electric brand and any trademarks of Schneider Electric and its subsidiaries referred to in this document are the property of Schneider Electric or its subsidiaries. All other brands may be trademarks of their respective owner.

This document and its content are protected under applicable copyright laws and provided for informative use only. No part of this document may be reproduced or transmitted in any form or by any means (electronic, mechanical, photocopying, recording, or otherwise), for any purpose, without the prior written permission of Schneider Electric.

Schneider Electric does not grant any right or license for commercial use of the document or its content, except for a non-exclusive and personal license to consult it on an "as is" basis.

Electrical equipment should be installed, operated, serviced, and maintained only by qualified personnel. No responsibility is assumed by Schneider Electric for any consequences arising out of the use of this material.

Schneider Electric reserves the right to make changes or updates with respect to or in the content of this document or the format thereof, at any time without notice.

To the extent permitted by applicable law, no responsibility or liability is assumed by Schneider Electric and its subsidiaries for any errors or omissions in the informational content of this document, as well as any non-intended use or misuse of the content thereof.

As part of a group of responsible, inclusive companies, we are updating our communications that contain non-inclusive terminology. Until we complete this process, however, our content may still contain standardized industry terms that may be deemed inappropriate by our customers.

Table of Contents

Table of Contents 3
Safety Information 5
Qualification of Personnel 6
Intended Use 6
About the Book 7
Modicon M100/M200 Logic Controller General Overview 11
M100/M200 Logic Controller Introduction 11
M100/M200 Logic Controller Presentation 11
M100/M200 Logic Controller Description 16
M200 Logic Controller Maximum Hardware Configuration 17
M100/M200 Logic Controller Inputs/Outputs 19
Digital Inputs Characteristics 19
Relay Outputs Characteristics 22
Regular and Fast Transistor Outputs Characteristics 25
TMCR2••• Cartridges 27
TMCR2DM4U Characteristics 27
TMCR2AI2 Characteristics 30
TMCR2AQ2V Characteristics 31
TMCR2AQ2C Characteristics 33
TMCR2AM3 Characteristics 34
TMCR2TI2 Characteristics 37
TMCR2SL1 Characteristics 39
TMCR2SL1A Characteristics 40
TMCR2SL1S Characteristics 42
TM3R Expansion Modules 43
TM3R Expansion Modules 43
TM3RDM16R Characteristics 44
TM3RDM32R Characteristics 50
TM3 and TM2 Expansion Modules 56
TM3 Expansion Modules 56
TM2 Expansion Modules 59
M100/M200 Logic Controller Environmental Information 62
Environmental Characteristics 62
Certifications and Standards 64
Modicon M100/M200 Logic Controller Management 65
Input Management 65
Output Management 69
Run/Stop 75
Micro SD Card 76
M200 Logic Controller Real Time Clock (RTC) 79
Status LEDs 82
Modicon M100/M200 Logic Controller Installation and Wiring 84
M100/M200 Logic Controller Electrical Requirements 84
Installation and Maintenance Requirements 84
Mounting Positions and Clearances 86
Top Hat Section Rail (DIN rail) 88
Installing and Removing the Controller with Expansions 90
Direct Mounting on a Panel Surface 92

TMCR2••• Installation 93
Assembling an Expansion Module to a Controller 96
Disassembling an Expansion Module from a Controller 97
Wiring Best Practices 98
Grounding the M100/M200 System 102
DC Power Supply Characteristics and Wiring 105
AC Power Supply Characteristics and Wiring 108
24VDC Sensor Power Supply Characteristics and Wiring 110
M100/M200 Logic Controller Wiring 110
Digital Inputs Wiring Diagrams 110
Relay Outputs Wiring Diagrams 120
Regular and Fast Transistor Outputs Wiring Diagrams 125
Ethernet Port 129
USB Mini-B Programming Port 130
Serial Line 1 132
TMCR2••• Cartridges Wiring 133
TMCR2DM4U Wiring Diagram 133
TMCR2AI2 Wiring Diagram 134
TMCR2AQ2V Wiring Diagram 134
TMCR2AQ2C Wiring Diagram 135
TMCR2AM3 Wiring Diagram 135
TMCR2TI2 Wiring Diagram 136
TMCR2SL1 Wiring Diagram 137
TMCR2SL1A Wiring Diagram 137
TMCR2SL1S Wiring Diagram 138
TM3R Expansion Modules Wiring 138
TM3RDM16R Wiring Diagram 138
TM3RDM32R Wiring Diagram 139
Glossary 143
Index 147

Safety Information

Important Information

Read these instructions carefully, and look at the equipment to become familiar with the device before trying to install, operate, service, or maintain it. The following special messages may appear throughout this documentation or on the equipment to warn of potential hazards or to call attention to information that clarifies or simplifies a procedure.

The addition of this symbol to a “Danger” or “Warning” safety label indicates that an electrical hazard exists which will result in personal injury if the instructions are not followed.

This is the safety alert symbol. It is used to alert you to potential personal injury hazards. Obey all safety messages that follow this symbol to avoid possible injury or death.

⚠ DANGER

DANGER indicates a hazardous situation which, if not avoided, **will result in** death or serious injury.

⚠ WARNING

WARNING indicates a hazardous situation which, if not avoided, **could result in** death or serious injury.

⚠ CAUTION

CAUTION indicates a hazardous situation which, if not avoided, **could result** in minor or moderate injury.

NOTICE

NOTICE is used to address practices not related to physical injury.

Information Related to Cybersecurity

Schneider Electric is most focused on Cybersecurity. Our security by design approach makes our products more resilient against cyberattacks. We implemented mechanisms to mitigate threats, reduce exploitable weaknesses, and defend against avoidable data breaches and cyberattacks. However, it is still strongly recommend to apply the following mitigations to reduce the risk of exploit.

- Use controllers and devices only in a protected environment to minimize network exposure and ensure that they are not accessible from outside.
- Use firewalls to protect and separate the control system network from other networks.
- Use VPN (Virtual Private Networks) tunnels if remote access is required.
- Limit the access to both development and control system by physical means, operating system features, etc.
- Protect both development and control system by using up to date virus detecting solutions.

To ensure you are informed of all updates, including details on affected products and re-mediation plans, subscribe to Schneider Electric’s security notification

service here: https://www.se.com/en/work/support/cybersecurity/security-notifications.jsp

Recommended Cybersecurity Best Practices: https://www.se.com/ww/en/download/document/7EN52-0390/

Please Note

Electrical equipment should be installed, operated, serviced, and maintained only by qualified personnel. No responsibility is assumed by Schneider Electric for any consequences arising out of the use of this material.

A qualified person is one who has skills and knowledge related to the construction and operation of electrical equipment and its installation, and has received safety training to recognize and avoid the hazards involved.

Qualification of Personnel

Only appropriately trained persons who are familiar with and understand the contents of this manual and all other pertinent product documentation are authorized to work on and with this product.

The qualified person must be able to detect possible hazards that may arise from parameterization, modifying parameter values and generally from mechanical, electrical, or electronic equipment. The qualified person must be familiar with the standards, provisions, and regulations for the prevention of industrial accidents, which they must observe when designing and implementing the system.

Intended Use

The product may only be used in compliance with all applicable safety regulations and directives, the specified requirements, and the technical data.

Prior to using the product, you must perform a risk assessment in view of the planned application. Based on the results, the appropriate safety-related measures must be implemented.

Since the product is used as a component in an overall machine or process, you must ensure the safety of persons by means of the design of this overall system.

Operate the product only with the specified cables and accessories. Use only genuine accessories and spare parts.

Any use other than the use explicitly permitted is prohibited and can result in unanticipated hazards.

About the Book

Document Scope

Use this document to:

- Install and operate your M100/M200 Logic Controller.
- Connect the M100/M200 Logic Controller to a programming device equipped with EcoStruxure Machine Expert-Basic software.
- Interface the M100/M200 Logic Controller with I/O expansion modules, HMI and other devices.
- Familiarize yourself with the M100/M200 Logic Controller features.

NOTE: Read and understand this document and all related documents, page 7 before installing, operating, or maintaining your controller.

Validity Note

This document has been updated for the release of EcoStruxure Machine Expert-Basic V1.3.

The technical characteristics of the devices described in this manual also appear online.

The characteristics of the products described in this document are intended to match the characteristics that are available on www.se.com. As part of our corporate strategy for constant improvement, we may revise the content over time to enhance clarity and accuracy. If you see a difference between the characteristics in this document and the characteristics on www.se.com, consider www.se.com to contain the latest information.

For product compliance and environmental information (RoHS, REACH, PEP, EOLI, etc.), go to https://www.se.com/ww/en/about-us/sustainability/green-premium-products/

Related Documents

Title of Documentation	Reference Number
Modicon M100/M200 Logic Controller - Programming Guide	EIO0000002019 (ENG) EIO0000002020 (CHS)
Modicon TM3 Digital I/O Modules - Hardware Guide	EIO0000003125 (ENG) EIO0000003126 (FRE) EIO0000003127 (GER) EIO0000003128 (SPA) EIO0000003129 (ITA) EIO0000003130 (CHS) EIO0000003424 (POR) EIO0000003425 (TUR)
Modicon TM3 Analog I/O Modules - Hardware Guide	EIO0000003131 (ENG) EIO0000003132 (FRE) EIO0000003133 (GER) EIO0000003134 (SPA)

Title of Documentation	Reference Number
	EIO0000003135 (ITA) EIO0000003136 (CHS) EIO0000003426 (POR) EIO0000003427 (TUR)
Modicon TM2 Digital I/O Modules - Hardware Guide	EIO0000000028 (ENG) EIO0000000029 (FRE) EIO0000000030 (GER) EIO0000000031 (SPA) EIO0000000032 (ITA) EIO0000000033 (CHS)
Modicon TM2 Analog I/O Modules - Hardware Guide	EIO0000000034 (ENG) EIO0000000035 (FRE) EIO0000000036 (GER) EIO0000000037 (SPA) EIO0000000038 (ITA) EIO0000000039 (CHS)
M100/M200 Logic Controller - Instruction Sheet	NVE86608
TM3R••• Expansion Modules - Instruction Sheet	NHA34534
TMCR2••• Cartridges - Instruction Sheet	EAV93187

You can download these technical publications and other technical information from our website at www.se.com/ww/en/download/ .

Product Related Information

⚠⚠DANGER

HAZARD OF ELECTRIC SHOCK, EXPLOSION OR ARC FLASH

- Disconnect all power from all equipment including connected devices prior to removing any covers or doors, or installing or removing any accessories, hardware, cables, or wires except under the specific conditions specified in the appropriate hardware guide for this equipment.
- Always use a properly rated voltage sensing device to confirm the power is off where and when indicated.
- Replace and secure all covers, accessories, hardware, cables, and wires and confirm that a proper ground connection exists before applying power to the unit.
- Use only the specified voltage when operating this equipment and any associated products.

Failure to follow these instructions will result in death or serious injury.

⚠ DANGER

POTENTIAL FOR EXPLOSION

- Only use this equipment in non-hazardous locations.
- Do not substitute components which would impair compliance to Class I, Division 2.
- Do not connect or disconnect equipment unless power has been removed or the location is known to be non-hazardous.
- Do not use the USB port(s), if so equipped, unless the location is known to be non-hazardous.

Failure to follow these instructions will result in death or serious injury.

⚠ WARNING

LOSS OF CONTROL

- The designer of any control scheme must consider the potential failure modes of control paths and, for certain critical control functions, provide a means to achieve a safe state during and after a path failure. Examples of critical control functions are emergency stop and overtravel stop, power outage and restart.
- Separate or redundant control paths must be provided for critical control functions.
- System control paths may include communication links. Consideration must be given to the implications of unanticipated transmission delays or failures of the link.
- Observe all accident prevention regulations and local safety guidelines.[1]
- Each implementation of this equipment must be individually and thoroughly tested for proper operation before being placed into service.

Failure to follow these instructions can result in death, serious injury, or equipment damage.

[1] For additional information, refer to NEMA ICS 1.1 (latest edition), "Safety Guidelines for the Application, Installation, and Maintenance of Solid State Control" and to NEMA ICS 7.1 (latest edition), "Safety Standards for Construction and Guide for Selection, Installation and Operation of Adjustable-Speed Drive Systems" or their equivalent governing your particular location.

⚠ WARNING

UNINTENDED EQUIPMENT OPERATION

- Only use software approved by Schneider Electric for use with this equipment.
- Update your application program every time you change the physical hardware configuration.

Failure to follow these instructions can result in death, serious injury, or equipment damage.

Modicon M100/M200 Logic Controller General Overview

What's in This Chapter

M100/M200 Logic Controller Introduction 11
M100/M200 Logic Controller Inputs/Outputs 19
TMCR2••• Cartridges 27
TM3R Expansion Modules 43
TM3 and TM2 Expansion Modules 56
M100/M200 Logic Controller Environmental Information 62

M100/M200 Logic Controller Introduction

Overview

This section provides general information about the M100/M200 Logic Controller system architecture and its components.

M100/M200 Logic Controller Presentation

Overview

The M100/M200 Logic Controller has various powerful features and can service a wide range of applications.

Software configuration, programming, and commissioning are accomplished with the EcoStruxure Machine Expert-Basic software described in the EcoStruxure Machine Expert-Basic Operating Guide (see EcoStruxure Machine Expert - Basic, Operating Guide) and the M100/M200 Logic Controller - Programming Guide (see Modicon M100/M200 Logic Controller, Programming Guide).

Programming Languages

The M100/M200 Logic Controller is configured and programmed with the EcoStruxure Machine Expert-Basic software, which supports the following IEC 61131-3 programming languages:

- IL: Instruction List
- LD: Ladder Diagram
- Grafcet (List)
- Grafcet SFC

Power Supply

The power supply of the M100 Logic Controller is 100...240 Vac, page 108.

The power supply of the M200 Logic Controller is 24 Vdc, page 105 or 100...240 Vac, page 108.

Real Time Clock

The M200 Logic Controller includes a Real Time Clock (RTC) system, page 79.

Run/Stop

The M100/M200 Logic Controller can be operated externally by the following:

- A hardware Run/Stop switch, page 75
- A Run/Stop, page 75 operation by a dedicated digital input, defined in the software configuration. For more information, refer to Configuring Digital Inputs in the M100/M200 Logic Controller Programming Guide (see Modicon M100/M200 Logic Controller, Programming Guide).
- EcoStruxure Machine Expert-Basic software. For more information, refer to the EcoStruxure Machine Expert-Basic Operating Guide (see EcoStruxure Machine Expert - Basic, Operating Guide).

Embedded Inputs/Outputs

The following embedded I/O types are available, depending on the controller reference:

- Regular inputs, page 20
- Fast inputs, page 20 associated with counters
- Relay outputs, page 22
- Regular transistor outputs, page 25 (sink and source)
- Fast transistor outputs, page 26 (sink and source) associated with pulse generators

Removable Storage

The M100/M200 Logic Controllers include an embedded micro SD card slot, page 76.

The main uses of the micro SD card are:

- Initializing the controller with a new application
- Updating the controller firmware

Embedded Communication Features

The following types of communication ports are available depending on the controller reference:

- Ethernet, page 129
- USB Mini-B, page 130
- Serial Line 1, page 132

M100 Logic Controller References

Reference	Digital inputs	24VDC sensor power supply	Digital outputs	Communication ports	Power supply
TM100C16RN	3 regular inputs(1) 4 fast inputs (FC)(2) 2 high-speed inputs (HSC)(4)	Yes	7 relay outputs	1 serial line port 1 USB programming port	100...240 Vac
TM100C24RN	8 regular inputs(1) 4 fast inputs (FC)(2) 2 high-speed inputs (HSC)(4)	Yes	10 relay outputs	1 serial line port 1 USB programming port	100...240 Vac
TM100C32RN	14 regular inputs(1) 4 fast inputs (FC)(2) 2 high-speed inputs (HSC)(4)	Yes	12 relay outputs	1 serial line port 1 USB programming port	100...240 Vac
TM100C40RN	18 regular input(1) 4 fast inputs (FC)(2) 2 high-speed inputs (HSC)(4)	Yes	16 relay outputs	1 serial line port 1 USB programming port	100...240 Vac

(1) The regular inputs have a maximum frequency of 5 kHz. The frequency refresh depends on the cycle time of the user application.

(2) The fast inputs have a maximum frequency of 5 kHz. They can be used either as regular inputs or as fast inputs for counting or event functions.

(3) The high-speed inputs have a maximum frequency of 100 kHz.

(4) The high-speed inputs have a maximum frequency of 60 kHz.

M200 Logic Controller References

Reference	Digital inputs	24VDC sensor power supply	Digital outputs	Communication ports	Power supply
TM200C16R	1 regular input[1] 4 fast inputs (FC)[2] 4 high-speed inputs (HSC)[3]	Yes	7 relay outputs	1 serial line port 1 USB programming port	100...240 Vac
TM200C16T		No	Source outputs 5 regular transistor outputs 2 fast outputs (PWM / PLS /PTO / FREQGEN)[4]	1 serial line port 1 USB programming port	24 Vdc
TM200C16U		No	Sink outputs 5 regular transistor outputs 2 fast outputs (PWM / PLS / PTO / FREQGEN)[4]	1 serial line port 1 USB programming port	24 Vdc
TM200C24R	6 regular inputs[1] 4 fast inputs (FC)[2] 4 high-speed inputs (HSC)[3]	Yes	10 relay outputs	1 serial line port 1 USB programming port	100...240 Vac
TM200CE24R		Yes		1 serial line port 1 USB programming port 1 Ethernet port	
TM200C24T		No	Source outputs 8 regular transistor outputs 2 fast outputs (PWM / PLS / PTO / FREQGEN)[4]	1 serial line port 1 USB programming port	24 Vdc
TM200CE24T		No		1 serial line port 1 USB programming port 1 Ethernet port	
TM200C24U		No	Sink outputs 8 regular transistor outputs 2 fast outputs (PWM / PLS / PTO / FREQGEN)[4]	1 serial line port 1 USB programming port	24 Vdc
TM200CE24U		No		1 serial line port 1 USB programming port 1 Ethernet port	
TM200C32R	12 regular inputs[1] 4 fast inputs (FC)[2] 4 high-speed inputs (HSC)[3]	Yes	12 relay outputs	1 serial line port 1 USB programming port	100...240 Vac
TM200CE32R		Yes		1 serial line port 1 USB programming port 1 Ethernet port	
TM200C32T		No	Source outputs 10 regular transistor outputs 2 fast outputs	1 serial line port 1 USB programming port	24 Vdc
TM200C32U		No	Sink outputs 10 regular transistor outputs 2 fast outputs		

Reference	Digital inputs	24VDC sensor power supply	Digital outputs	Communication ports	Power supply
TM200C40R	16 regular inputs(1) 4 fast inputs (FC)(2) 4 high-speed inputs (HSC)(3)	Yes	16 relay outputs	1 serial line port 1 USB programming port	100...240 Vac
TM200CE40R		Yes		1 serial line port 1 USB programming port 1 Ethernet port	
TM200C40T		No	Source outputs 14 regular transistor outputs 2 fast outputs (PWM / PLS / PTO / FREQGEN)(4)	1 serial line port 1 USB programming port	24 Vdc
TM200CE40T		No		1 serial line port 1 USB programming port 1 Ethernet port	
TM200C40U		No	Sink outputs 14 regular transistor outputs 2 fast outputs (PWM / PLS / PTO / FREQGEN)(4)	1 serial line port 1 USB programming port	24 Vdc
TM200CE40U		No		1 serial line port 1 USB programming port 1 Ethernet port	
TM200C60R	28 regular inputs(1) 4 fast inputs (FC)(2) 4 high-speed inputs (HSC)(3)	Yes	24 relay outputs	1 serial line port 1 USB programming port	100...240 Vac
TM200CE60R		Yes		1 serial line port 1 USB programming port 1 Ethernet port	

(1) The regular inputs have a maximum frequency of 5 kHz. The frequency refresh depends on the cycle time of the user application.

(2) The fast inputs have a maximum frequency of 5 kHz. They can be used either as regular inputs or as fast inputs for counting or event functions.

(3) The high-speed inputs have a maximum frequency of 100 kHz.

(4) The fast transistor outputs can be used either as regular transistor outputs, or for PLS/PWM/PTO/FREQGEN functions.

Delivery Content

The following figure shows the content of the delivery for a M100/M200 Logic Controller:

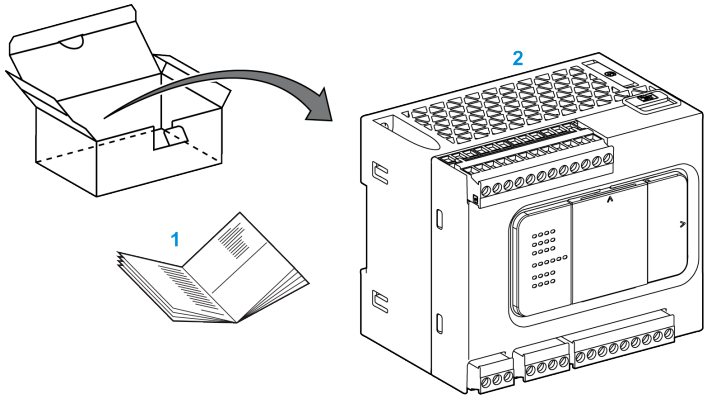

1 M100/M200 Logic Controller Instruction Sheet

2 M100/M200 Logic Controller

M100/M200 Logic Controller Description

Description

The components of the M100/M200 Logic Controller depend on the controller reference.

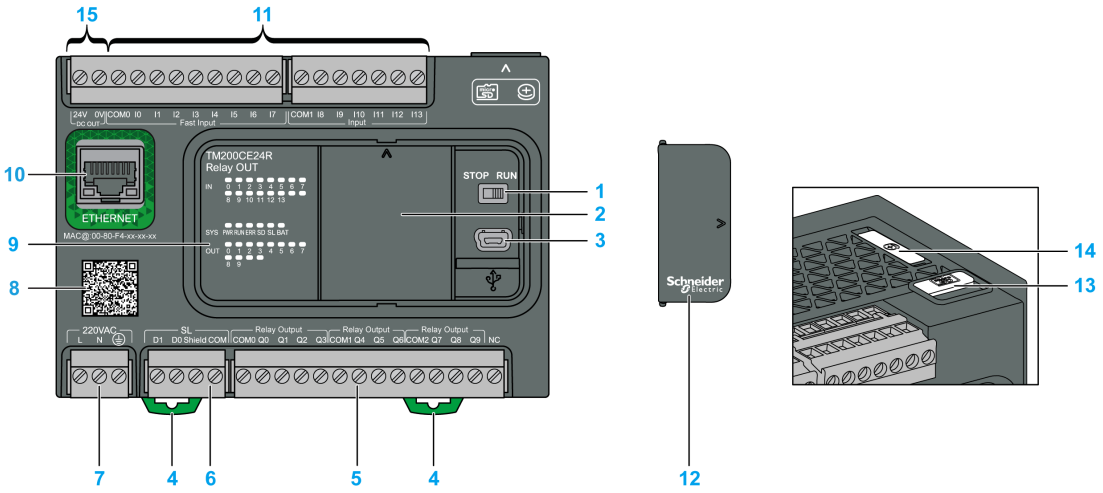

N°	Description	M100	M200	Refer to
1	Run/Stop switch			Run/Stop switch, page 75
2	Cartridge slot	No	Yes (1 or 2)	TMCR2••• Installation, page 93
3	USB mini-B programming port for terminal connection to a programming PC (EcoStruxure Machine Expert-Basic)			USB mini-B programming port , page 130
4	Clip-on lock for 35 mm (1.38 in.) top hat section rail (DIN-rail)			DIN Rail, page 88
5	Output terminal blocks	Removable		Rules for screw terminal block, page 100 Relay outputs wiring diagram, page 120 Regular and fast transistor outputs wiring diagram, page 125
6	Serial line terminal blocks	Removable		Serial line 1, page 132
7	Power supply terminal blocks	Removable		Rules for screw terminal block, page 100 DC power supply, page 105 AC power supply, page 108
8	QR code			–
9	Status LEDs			Status LEDs, page 82
10	Ethernet port	No	Yes (TM200CE•••)	Ethernet port, page 129
11	Input terminal blocks	Removable		Rules for Screw Terminal Block, page 100 Digital inputs wiring diagram, page 110
12	Protective cover for Run/Stop switch and USB mini-B programming port			–
13	Micro SD card slot			Micro SD Card Slot, page 76
14	Battery holder	No	Yes	Battery, page 79
15	24VDC sensor power supply terminal blocks	TM100•••RN	TM200•••R	Rules for Screw Terminal Block, page 100 24VDC Sensor Power Supply Characteristics and Wiring, page 110

M200 Logic Controller Maximum Hardware Configuration

Introduction

The M200 Logic Controller is a control system that offers an all-in-one solution with optimized configurations and an expandable architecture.

M200 Logic Controller Local Configuration Architecture

Optimized local configuration and flexibility are provided by the association of:

- M200 Logic Controller
- TM3R expansion modules
- TM3 expansion modules
- TM2 expansion modules

Application requirements determine the architecture of your M200 Logic Controller configuration.

The following figure represents the components of a local configuration:

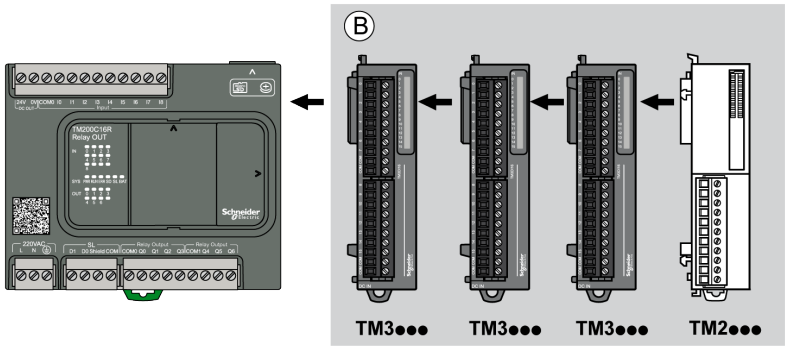

(B) Expansion modules (see maximum number of modules)

NOTE: It is prohibited to mount a TM2 module before any TM3R or TM3 module, as indicated in the following figure:

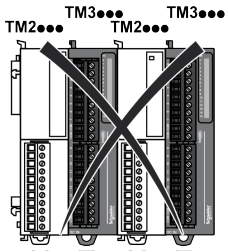

Maximum Number of Modules

The following table shows the maximum configuration supported:

References	Maximum	Type of configuration
TM200C16•	4 TM3R / TM3 / TM2 expansion modules	Local
TM200C24• TM200CE24•		
TM200C32• TM200CE32R		
TM200C40• TM200CE40•		

References	Maximum	Type of configuration
TM200C60R TM200CE60R		

NOTE: The configuration with its TM3R, TM3, and TM2 expansion modules is validated by EcoStruxure Machine Expert-Basic software in the **Configuration window**.

Current Supplied to the I/O Bus

The following table shows the maximum current supplied by the controllers to the I/O Bus:

Reference	I/O bus 5 Vdc	I/O bus 24 Vdc
TM200C16R	360 mA	320 mA
TM200C16T		
TM200C16U		
TM200C24R		
TM200CE24R		
TM200C24T		
TM200CE24T		
TM200C24U		
TM200CE24U		
TM200C32R		
TM200CE32R		
TM200C32T		
TM200C32U		
TM200C40R		
TM200CE40R		
TM200C40T		
TM200CE40T		
TM200C40U		
TM200CE40U		
TM200C60R		
TM200CE60R		

NOTE: Expansion modules consume current from the 5 Vdc and 24 Vdc supplied to the I/O Bus. Therefore, the current delivered by the logic controller to the I/O Bus defines the maximum number of expansion modules that can be connected to the I/O Bus (validated by EcoStruxure Machine Expert-Basic software in the **Configuration** window).

M100/M200 Logic Controller Inputs/Outputs

Digital Inputs Characteristics

Overview

For detailed information on the digital inputs, refer to Digital Input Wiring Diagrams, page 110 and Input Management, page 65.

M100 Logic Controller Regular Input Characteristics

Characteristic		Value			
		TM100 C16RN	**TM100 C24RN**	**TM100 C32RN**	**TM100 C40RN**
Number of regular inputs		3 inputs (I6...I8)	8 inputs (I6...I13)	14 inputs (I6...I19)	18 inputs (I6...I23)
Number of channel groups		1 common line for I0...I8	1 common line for I0...I7 1 common line for I8...I13	1 common line for I0...I7 1 common line for I8...I19	1 common line for I0....I7 1 common line for I8...I23
Input type		Type 1 (IEC/EN 61131-2)			
Logic type		Sink/Source			
Input voltage range		24 Vdc			
Rated input voltage		0...28.8 Vdc			
Rated input current		7 mA			
Input impedance		3.3 kΩ			
Input limit values	Voltage at state 1	> 15 Vdc (15...28.8 Vdc)			
	Voltage at state 0	< 5 Vdc (0...5 Vdc)			
	Current at state 1	> 2.5 mA			
	Current at state 0	< 1.5 mA			
Derating		See *Derating Curve*, page 22			
Turn on time	I2...I5	35 µs + filter value[1]			
	I8...I13	35 µs + filter value[1]			
	I14...I23	55 µs + filter value[1]			
Turn off time	I2...I5	100 µs + filter value[1]			
	I8...I13	100 µs + filter value[1]			
	I14...I23	125 µs + filter value[1]			
Isolation between input and internal logic		Opto-coupler			
Overvoltage protection		Up to 30 V, 1 hour per 24 hours			
Connection type		Removable screw terminal blocks			
Cable	Unshielded	50 m (164 ft)			
	Shielded (for PTO and HSC assistant inputs)	Maximum 100 m (328 ft)			
[1] For more information, refer to *Integrator Filter Principle*, page 65.					

M200 Logic Controller Regular Input Characteristics

Characteristic		Value				
		TM200C16•	**TM200C24•** **TM200CE24•**	**TM200C32•** **TM200CE32R**	**TM200C40•** **TM200CE40•**	**TM200C60R** **TM200CE60R**
Number of regular inputs		1 input (I8)	6 inputs (I8...I13)	12 inputs (I8...I19)	16 inputs (I8...I23)	28 inputs (I8...I35)
Number of channel groups		1 common line for I0...I8	1 common line for I0...I7 1 common line for I8...I13	1 common line for I0...I7 1 common line for I8...I19	1 common line for I0....I7 1 common line for I8...I23	1 common line for I0....I7 1 common line for I8...I35
Input type		Type 1 (IEC/EN 61131-2)				
Logic type		Sink/Source				
Input voltage range		24 Vdc				
Rated input voltage		0...28.8 Vdc				
Rated input current		7 mA				
Input impedance		3.3 kΩ				
Input limit values	Voltage at state 1	> 15 Vdc (15...28.8 Vdc)				
	Voltage at state 0	< 5 Vdc (0...5 Vdc)				
	Current at state 1	> 2.5 mA				
	Current at state 0	< 1.5 mA				
Derating		See *Derating Curve*, page 22				
Turn on time	I2...I5	35 µs + filter value[1]				
	I8...I13	35 µs + filter value[1]				
	I14...I35	55 µs + filter value[1]				
Turn off time	I2...I5	100 µs + filter value[1]				
	I8...I13	100 µs + filter value[1]				
	I14...I35	125 µs + filter value[1]				
Isolation between input and internal logic		Opto-coupler				
Overvoltage protection		Up to 30 V, 1 hour per 24 hours				
Connection type		Removable screw terminal blocks				
Connector insertion/removal durability		Over 50 times				
Cable	Unshielded	50 m (164 ft)				
	Shielded (for PTO and HSC assistant inputs)	Maximum 100 m (328 ft)				
[1] For more information, refer to *Integrator Filter Principle*, page 65.						

Fast Input Characteristics

The following table describes the characteristics of the M100/M200 Logic Controller fast inputs:

Characteristic		Fast Counter Input Values	High Speed Counter Input Values
Number of fast inputs	TM100C••RN	4 inputs (I2...I5)	2 inputs (I0, I1)
	TM200C•••		4 inputs (I0, I1, I6, I7)
Number of channel groups	TM•00C16•	1 common line for I0...I8	
	Others	1 common line for I0...I7	
Input type		Type 1 (IEC/EN 61131-2)	
Logic type		Sink/Source	
Rated input voltage		24 Vdc	
Input voltage range		0...28.8 Vdc	
Rated input current		7 mA	9 mA
Input impedance		3.3 kΩ	2.81 kΩ
Input limit values	Voltage at state 1	> 15 Vdc (15...28.8 Vdc)	
	Voltage at state 0	< 5 Vdc (0...5 Vdc)	
	Current at state 1	> 2.5 mA	> 5 mA
	Current at state 0	< 1.5 mA	
Derating		See *Derating Curve*, page 22	
Turn on time		35 µs	5 µs
Turn off time		100 µs	5 µs
Counter maximum frequency	TM100C••RN	Single phase: 5 kHz	• A/B phase counter: 60 kHz • Pulse/Direction counter: 60 kHz • Single counter: 60 kHz
	TM200C•••		• A/B phase counter: 100 kHz • Pulse/Direction counter: 100 kHz • Single counter: 100 kHz
Counter supported operation mode		Up/Down counter	• A/B phase counter (Bi-phase counter) • Pulse/Direction counter (Up/Down counter) • Single counter • CW/CCW counter • Frequency meter
Isolation	Between input and internal logic	500 Vac / 800 Vdc	
	Between input groups	500 Vac / 800 Vdc	
Overvoltage protection		Up to 30 V, 1 hour per 24 hours	
Connection type		Removable screw terminal blocks	
Connector insertion/removal durability (only for M200)		Over 50 times	
Cable	Type	Shielded, including the 24 Vdc power supply	
	Length	Maximum 10 m (32.8 ft)	

Derating Curve

The following figure shows the derating curve of TM200C16• and TM200C24• embedded digital inputs:

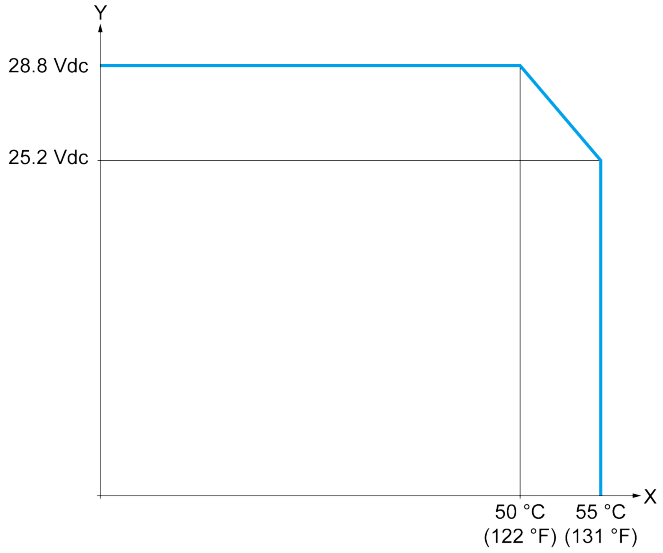

X Ambient temperature (°C / °F)

Y Input voltage (V)

Relay Outputs Characteristics

Overview

For detailed information on the relay outputs, refer to Relay Outputs Wiring Diagrams, page 120 and Output Management, page 69.

Characteristics

The following table describes the characteristics of the M100/M200 Logic Controller (TM100•••RN and TM200•••R) with relay outputs, depending on the controller reference:

Characteristic	**Value**				
	TM100C16RN **TM200C16R**	**TM100C24RN** **TM200C24R** **TM200CE24R**	**TM100C32RN** **TM200C32R** **TM200CE32R**	**TM100C40RN** **TM200C40R** **TM200CE40R**	**TM200C60R** **TM200CE60R**
Number of relay outputs	7 outputs	10 outputs	12 outputs	16 outputs	24 outputs
Number of channel groups	1 common line for Q0...Q3 1 common line for Q4...Q6	1 common line for Q0...Q3 1 common line for Q4...Q6 1 common line for Q7...Q9	1 common line for Q0...Q3 1 common line for Q4...Q7 1 common line for Q8...Q11	1 common line for Q0...Q3 1 common line for Q4...Q7 1 common line for Q8...Q11 1 common line for Q12...Q15	1 common line for Q0...Q3 1 common line for Q4...Q7 1 common line for Q8...Q11 1 common line for Q12...Q15 1 common line for Q16...Q19 1 common line for Q20...Q23

Characteristic		Value				
		TM100C16RN **TM200C16R**	**TM100C24RN** **TM200C24R** **TM200CE24R**	**TM100C32RN** **TM200C32R** **TM200CE32R**	**TM100C40RN** **TM200C40R** **TM200CE40R**	**TM200C60R** **TM200CE60R**
Output type		Relay				
Contact type		NO (Normally Open)				
Rated output voltage		24 Vdc, 220 Vac				
Maximum voltage		30 Vdc, 250 Vac				
Rated output current		2 A				
24VDC sensor output		250mA		300mA		
Maximum output current at 55 °C (131 °F) (50% derating when all the relay outputs are used at 55 °C (131 °F))		2 A per output				
		4 A for common 0 (Q0...Q3) 4 A for common 1 (Q4...Q6)	4 A for common 0 (Q0...Q3) 4 A for common 1 (Q4...Q6) 4 A for common 2 (Q7...Q9)	4 A per common		
Maximum output current at peak load		5 A per output				
Maximum output frequency	With maximum load	0.1 Hz				
	Without load	5 Hz				
Derating		See *Derating Curve*, page 24				
Turn on time		Max. 10 ms				
Turn off time		Max. 10 ms				
Contact resistance		Max. 100 mΩ				
Mechanical life		20 million operations				
Electrical life under resistive load 2 A		100,000 switching cycles at 45 °C (113 °F)				
Protection against short circuit		No				
Isolation type		Relay coil				
Connection type		Removable screw terminal blocks				
Connector insertion/removal durability		Over 50 times				
Cable	Type	Unshielded				
	Length	Max. 150 m (492 ft)				
NOTE: Refer to *Protecting Outputs from Inductive Load Damage*, page 101 for additional information concerning output protection.						

Derating Curve

The following figure shows the derating curve of TM200C16R, TM200C•32R, TM200C•40R, and TM200C•60R for the relay outputs:

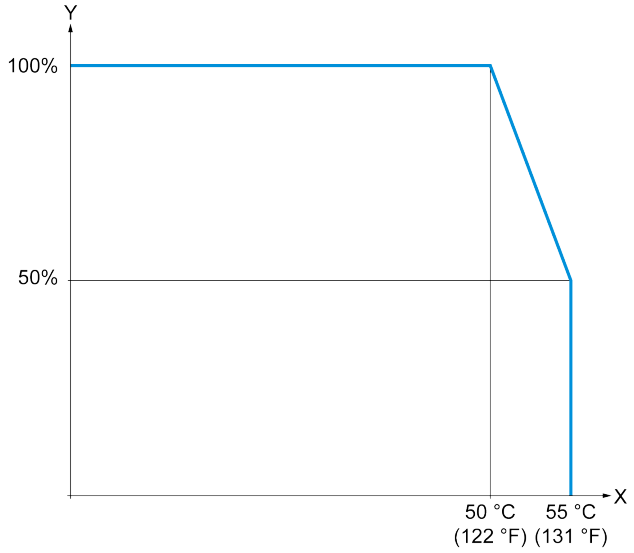

X Ambient temperature (°C / °F)

Y Output load current (%)

Power Limitation

The following table describes the power limitation of the relay outputs depending on the voltage, the type of load, and the number of operations required.

These controllers do not support capacitive loads.

⚠ WARNING

RELAY OUTPUTS WELDED CLOSED

- Always protect relay outputs from inductive alternating current load damage using an appropriate external protective circuit or device.
- Do not connect relay outputs to capacitive loads.

Failure to follow these instructions can result in death, serious injury, or equipment damage.

Power Limitations				
Voltage	**24 Vdc**	**120 Vac**	**240 Vac**	**Number of operations**
Power of resistive loads AC-12	–	240 VA 80 VA	480 VA 160 VA	100,000 300,000
Power of inductive loads AC-15 (cos ϕ = 0.35)	–	60 VA 18 VA	120 VA 36 VA	100,000 300,000
Power of inductive loads AC-14 (cos ϕ = 0.7)	–	120 VA 36 VA	240 VA 72 VA	100,000 300,000
Power of resistive loads DC-12	48 W 16 W	–	–	100,000 300,000
Power of inductive loads DC-13 L/R = 7 ms	24 W 7.2 W	–	–	100,000 300,000

Regular and Fast Transistor Outputs Characteristics

Overview

For detailed information on the regular and fast transistor outputs, refer to Regular and Fast Transistor Outputs Wiring Diagrams, page 125 and Output Management, page 69.

Regular Transistor Output Characteristics

The following table describes the characteristics of the M200 Logic Controller (TM200•••U and TM200•••T) with regular outputs, depending on the controller reference:

Characteristic		**Value**			
		TM200C16U **TM200C16T**	**TM200C24U** **TM200CE24U** **TM200C24T** **TM200CE24T**	**TM200C32T** **TM200C32U**	**TM200C40U** **TM200CE40U** **TM200C40T** **TM200CE40T**
Number of regular transistor outputs		5 outputs (Q2...Q6)	8 outputs (Q2...Q9)	10 outputs (Q2...Q11)	14 outputs (Q2...Q15)
Number of channel groups		1 common line for Q0...Q6	1 common line for Q0...Q3 1 common line for Q4...Q9	1 common line for Q0...Q3 1 common line for Q4...Q7 1 common line for Q8...Q11	1 common line for Q0..Q3 1 common line for Q4...Q7 1 common line for Q8...Q15
Output type		Transistor			
Logic type		Sink (TM200•••U) Source (TM200•••T)			
Rated output voltage		24 Vdc			
Output voltage range		20.4...28.8 Vdc			
Rated output current		0.5 A			
Total output current		3.5 A for channel group Q0...Q6	2 A for channel group Q0...Q3 3 A for channel group Q4...Q9	2A for channel group Q0...Q3 2A for channel group Q4...Q7 2A for channel group Q8...Q11	2 A for channel group Q0...Q3 2 A for channel group Q4...Q7 4 A for channel group Q8...Q15
Voltage drop		< 1.5 V for I = 0.1 A			
Turn on time	Q2...Q7	Max. 50 µs at 0.5 A			
	Other regular outputs	Max. 1 ms at 0.5 A			
Turn off time	Q2...Q7	Max. 300 µs at 0.5 A			
	Other regular outputs	Max. 1 ms at 0.5 A			
Protection against short circuit		Yes			
Automatic rearming after short circuit or overload		Yes, every 1 s			
Isolation between output and internal logic		500 Vac / 800 Vdc			
Connection type		Removable screw terminal blocks			

Characteristic		Value			
		TM200C16U **TM200C16T**	**TM200C24U** **TM200CE24U** **TM200C24T** **TM200CE24T**	**TM200C32T** **TM200C32U**	**TM200C40U** **TM200CE40U** **TM200C40T** **TM200CE40T**
Connector insertion/removal durability		Over 50 times			
Cable	Type	Unshielded			
	Length	Max 150 m (492.125 ft)			
NOTE: Refer to *Protecting Outputs from Inductive Load Damage*, page 101 for additional information concerning output protection.					

Fast Transistor Output Characteristics

The following table describes the characteristics of the M200 Logic Controller (TM200•••U and TM200•••T) with fast transistor outputs, depending on the controller reference:

Characteristic		Value			
		TM200C16U **TM200C16T**	**TM200C24U** **TM200CE24U** **TM200C24T** **TM200CE24T**	**TM200C32T** **TM200C32U**	**TM200C40U** **TM200CE40U** **TM200C40T** **TM200CE40T**
Number of fast transistor outputs		2 outputs (Q0 and Q1)	2 outputs (Q0 and Q1)	2 outputs (Q0 and Q1)	2 outputs (Q0 and Q1)
Number of channel groups		1 common line	1 common line	1 common line	1 common line
Output type		Transistor			
Logic type		Sink (TM200•••U) Source (TM200•••T)			
Rated output voltage		24 Vdc			
Output voltage range		20.4...28.8 Vdc			
Rated output current	When used as regular output	0.5 A			
	When used as fast output	50 mA			
Total output current		3.5 A for channel group Q0...Q6	2 A for channel group Q0...Q3 3 A for channel group Q4...Q9	2A for channel group Q0...Q3 2A for channel group Q4...Q7 2A for channel group Q8...Q11	2 A for channel group Q0...Q3 2 A for channel group Q4...Q7 4 A for channel group Q8...Q15
Re-sponse time	Origin input	250 µs			
	Limit input	250 µs			
	Touch probe	30 µs[1]			
Turn on time		Max. 5 µs			
Turn off time		Max. 5 µs			
Protection against short circuit		Yes			
Automatic rearming after short circuit or overload		Yes, every 1 s			
Power supply protection against reverse polarity		Yes			

Characteristic		Value			
		TM200C16U **TM200C16T**	**TM200C24U** **TM200CE24U** **TM200C24T** **TM200CE24T**	**TM200C32T** **TM200C32U**	**TM200C40U** **TM200CE40U** **TM200C40T** **TM200CE40T**
Maximum PLS/PTO/FREQGEN output frequency		100 kHz			
PWM output frequency range		1 Hz...10 kHz			
PWM mode accuracy		1 % of full scale			
Minimum PWM mode duty rate step		1 %			
PWM duty rate range		0 %...100 %			
Supported operating modes		Pulse / Direction output CW / CCW output S-curve function PWM output PLS output FREQGEN output			
Isolation between output and internal logic		500 Vac / 800 Vdc			
Insulation resistance		> 10 MΩ			
Residual voltage		< 1.5 V for I=0.1 A			
Minimum load impedance		48 Ω			
Connection type		Removable screw terminal blocks			
Connector insertion/removal durability		Over 50 times			
Cable	Type	Shielded, including 24 Vdc power supply			
	Length	Max 5 m (16 ft)			
NOTE: Refer to *Protecting Outputs from Inductive Load Damage*, page 101 for additional information concerning output protection.					
[1] The response time can be increased to 50 µs if the touch probe is triggered when the input status transfers from on to off.					

TMCR2••• Cartridges

Overview

You can expand the number of I/Os or communication options of your M100/M200 Logic Controller by adding a maximum of two TMCR2••• cartridges.

TMCR2DM4U Characteristics

Introduction

The following features are integrated into the TMCR2DM4U cartridge:

- 2 digital inputs
- 2 transistor sink outputs
- removable screw terminal block, 3.5 mm (0.13 in.) pitch

⚠ WARNING

UNINTENDED EQUIPMENT OPERATION

Do not exceed any of the rated values specified in the environmental and electrical characteristics tables.

Failure to follow these instructions can result in death, serious injury, or equipment damage.

Connectors

The following diagram shows a TMCR2DM4U cartridge marking and connectors:

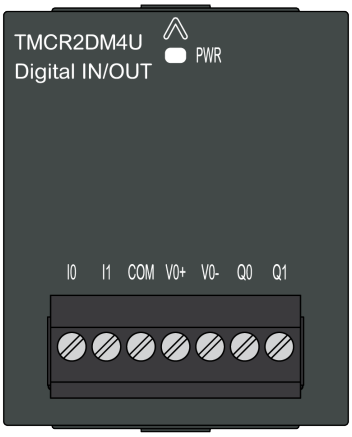

Main Characteristics

Main Characteristic	Value
Number of input channels	2 sink/source
Number of output channels	2 transistor sink
Rated input voltage	24 Vdc (external power supply)
Rated output voltage	24 Vdc
Rated output current	0.5 A
Connection type	3.5 mm (0.13 in.) pitch, removable screw terminal block
Weight	23 g (0.81 oz)

Input Characteristics

The table below describes the input characteristics of the TMCR2DM4U:

Characteristic	Value
Number of input channels	2 inputs
Number of channel groups	1 common line for 2 channels
Input type	Type 1 (IEC/EN 61131-2)
Logic type	Sink/source
Rated input voltage	24 Vdc
Input voltage range	0...28.8 Vdc
Rated input current	5 mA
Input impedance	4.7 kΩ

Characteristic		Value
Input limit values	Voltage at state 1	> 15 Vdc (15...28.8 Vdc)
	Voltage at state 0	< 5 Vdc (0...5 Vdc)
	Current at state 1	> 2.5 mA
	Current at state 0	< 1.0 mA
Turn on time		4 ms
Turn off time		4 ms
Isolation	Between input and internal logic	500 Vac / 800 Vdc
	Between input group and output group	500 Vac / 800 Vdc
	Between input groups	N/A
Connection type		Removable screw terminal block, 3.5 mm (0.13 in.) pitch
Connector insertion/removal durability		Over 100 times

Output Characteristics

The table below describes the output characteristics of the TMCR2DM4U:

Characteristic		Value
Number of output channels		2 outputs
Number of channel groups		1 common line for 2 channels
Output type		Transistor sink
Rated output voltage		24 V
Rated output current		0.5 A
Total output current		1 A for channel group Q0, Q1
Voltage drop		< 1.5 V for I = 0.1 A
Maximum output current		0.5 A per output
		1 A per common
Turn on time		1 ms + cycle time at 0.5 A
Turn off time		1 ms + cycle time at 0.5 A
Protection against short circuit		Yes
Isolation	Between output and internal logic	500 Vac / 800 Vdc
	Between input group and output group	500 Vac / 800 Vdc
	Between output groups	N/A
Connection type		Removable screw terminal block, 3.5 mm (0.13 in.) pitch
Connector insertion/removal durability		Over 100 times
NOTE: Refer to Protecting Outputs from Inductive Load Damage, page 101 for additional information on this topic.		

TMCR2AI2 Characteristics

Introduction

The following features are integrated into the TMCR2AI2 cartridge:

- 2 analog inputs (voltage or current)
- non-removable screw terminal block, 3.81 mm (0.15 in.) pitch

⚠ WARNING

UNINTENDED EQUIPMENT OPERATION

Do not exceed any of the rated values specified in the environmental and electrical characteristics tables.

Failure to follow these instructions can result in death, serious injury, or equipment damage.

Connectors

The following diagram shows a TMCR2AI2 cartridge marking and connectors:

Main Characteristics

Characteristic	Value	
	Voltage	Current
Number of input channels	2	
Input range	0...10 Vdc	0...20 mA 4...20 mA
Resolution	12 bits (4096 steps)	
Connection type	3.81 mm (0.15 in.) pitch, non-removable screw terminal block	
Weight	15 g (0.53 oz)	

Input Characteristics

The following table describes the input characteristics of the TMCR2AI2 cartridge:

Characteristics		Value	
		Voltage	Current
Rated input range		0...10 Vdc	0...20 mA 4...20 mA
Input impedance		> 1 MΩ	< 250 Ω
Sample duration time		10 ms per enabled channel	
Input type		single-ended	
Operating mode		self-scan	
Conversion mode		SAR type	
Maximum accuracy at ambient temperature: 25 °C (77 °F)		± 0.1 % of full scale	
Temperature drift		± 0.02 % of full scale per 1 °C (1.8 °F)	
Repeatability after stabilization time		± 0.5 % of full scale	
Non-linearity		± 0.01 % of full scale	
Maximum input deviation		± 1.0 % of full scale	
Digital resolution		12 bits (4096 steps)	
Input value of LSB		2.44 mV (0...10 Vdc range)	4.88 µA (0...20 mA range) 3.91 µA (4...20 mA range)
Data type in application program		scalable from –32768 to 32767	
Input data out of detection range		yes	
Noise resistance	Maximum temporary deviation during perturbations	± 4.0 % of the full scale maximum when EMC perturbation is applied to the power and I/O wiring	
	Recommended cable type and length	twisted-pair shielded	
		< 30 m (98.4 ft)	
	Crosstalk (maximum)	1 LSB	
Isolation between inputs and internal logic		not isolated	
Maximum continuous overload allowed (without damage)		13 Vdc	40 mA
Input filter		software filter: 0...10 s (with 0.01 s increment)	

TMCR2AQ2V Characteristics

Introduction

The following features are integrated into the TMCR2AQ2V cartridge:

- 2 analog voltage outputs
- non-removable screw terminal block, 3.81 mm (0.15 in.) pitch

⚠ WARNING

UNINTENDED EQUIPMENT OPERATION

Do not exceed any of the rated values specified in the environmental and electrical characteristics tables.

Failure to follow these instructions can result in death, serious injury, or equipment damage.

Connectors

The following diagram shows a TMCR2AQ2V cartridge marking and connectors:

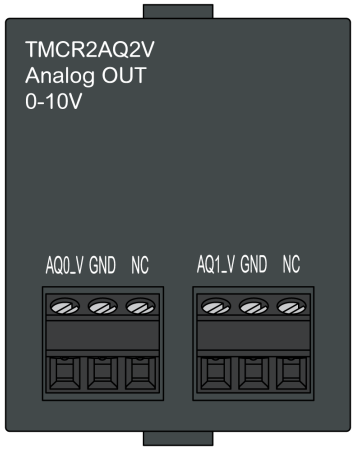

Main Characteristics

Characteristic	Value
	Voltage
Number of output channels	2
Output range	0...10 Vdc
Resolution	12 bits (4096 steps)
Connection type	3.81 mm (0.15 in.) pitch, non-removable screw terminal block
Weight	15 g (0.53 oz)

Output Characteristics

The following table describes the output characteristics of the TMCR2AQ2V cartridge:

Characteristics	Value
	Voltage
Rated output range	0...10 Vdc
Load impedance	> 2 KΩ
Application load type	resistive load
Conversion time	20 ms
Total output system transfer time	40 ms
Maximum accuracy at ambient temperature: 25 °C (77 °F)	± 0.3 % of full scale
Temperature drift	± 0.02 % of full scale per 1 °C (1.8 °F)
Repeatability after stabilization time	± 0.4 % of full scale
Non-linearity	± 0.01 % of full scale
Overshoot	0 %
Maximum output deviation	± 1.0 % of full scale (including ripple)
Digital resolution	12 bits (4096 steps)
Output value of LSB	2.44 mV
Data type in application program	0...4095 scalable from –32768 to 32767

Characteristics		Value
		Voltage
Noise resistance	Maximum temporary deviation during perturbations	± 4.0 % of the full scale maximum when EMC perturbation is applied to the power and I/O wiring
	Recommended cable type and length	twisted-pair shielded
		< 30 m (98.4 ft)
	Crosstalk (maximum)	1 LSB
Isolation between outputs and internal logic		not isolated

TMCR2AQ2C Characteristics

Introduction

The following features are integrated into the TMCR2AQ2C cartridge:

- 2 analog current outputs
- non-removable screw terminal block, 3.81 mm (0.15 in.) pitch

⚠ WARNING

UNINTENDED EQUIPMENT OPERATION

Do not exceed any of the rated values specified in the environmental and electrical characteristics tables.

Failure to follow these instructions can result in death, serious injury, or equipment damage.

Connectors

The following diagram shows a TMCR2AQ2C cartridge marking and connectors:

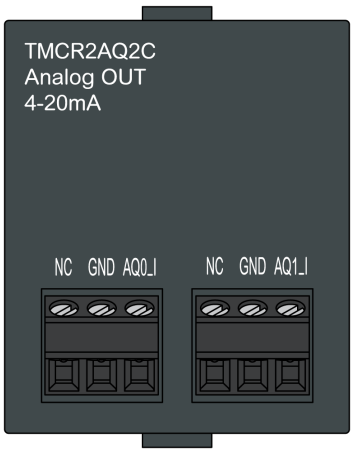

Main Characteristics

Characteristic	Value
	Current
Number of output channels	2
Output range	4...20 mA

Characteristic	Value
	Current
Resolution	12 bits (4096 steps)
Connection type	3.81 mm (0.15 in.) pitch, non-removable screw terminal block
Weight	15 g (0.53 oz)

Output Characteristics

The following table describes the output characteristics of the TMCR2AQ2C cartridge:

Characteristics		Value
		Current
Rated output range		4...20 mA
Load impedance		< 500 Ω
Application load type		resistive load
Conversion time		20 ms
Total output system transfer time		40 ms
Maximum accuracy at ambient temperature: 25 °C (77 °F)		± 0.3 % of full scale
Temperature drift		± 0.02 % of full scale per 1 °C (1.8 °F)
Repeatability after stabilization time		± 0.4 % of full scale
Non-linearity		± 0.01 % of full scale
Overshoot		0 %
Maximum output deviation		± 1.0 % of full scale (including ripple)
Digital resolution		12 bits (4096 steps)
Output value of LSB		3.91 µA
Data type in application program		0...4095 scalable from –32768 to 32767
Noise resistance	Maximum temporary deviation during perturbations	± 4.0 % of the full scale maximum when EMC perturbation is applied to the power and I/O wiring
	Recommended cable type and length	twisted-pair shielded
		< 30 m (98.4 ft)
	Crosstalk (maximum)	1 LSB
Isolation between outputs and internal logic		not isolated

TMCR2AM3 Characteristics

Introduction

The following features are integrated into the TMCR2AM3 cartridge:

- 2 analog inputs (voltage or current)
- 1 analog output (voltage or current)
- removable screw terminal block, 3.5 mm (0.13 in.) pitch

⚠ WARNING

UNINTENDED EQUIPMENT OPERATION

Do not exceed any of the rated values specified in the environmental and electrical characteristics tables.

Failure to follow these instructions can result in death, serious injury, or equipment damage.

Connectors

The following diagram shows a TMCR2AM3 cartridge marking and connectors:

Main Characteristics

Characteristic	Value	
	Voltage	**Current**
Number of input channels	2	
Input range	0...5 Vdc 0...10 Vdc	0...20 mA 4...20 mA
Resolution	16 bits	
Connection type	3.5 mm (0.13 in.) pitch, removable screw terminal block	
Weight	24 g (0.85 oz)	

Input Characteristics

The following table describes the input characteristics of the TMCR2AM3 cartridge:

Characteristics	Value	
	Voltage	**Current**
Rated input range	0...5 Vdc 0...10 Vdc	0...20 mA 4...20 mA
Input impedance	> 1 MΩ	250 Ω ± 5 %
Total input system transfer time	2 ms for 2 channels + 1 scan time	
Input type	single-ended	
Operating mode	self-scan	

Characteristics		Value	
		Voltage	**Current**
Conversion mode		SAR type	
Maximum accuracy at ambient temperature: 25 °C (77 °F)		± 0.5 % of full scale	
Maximum input deviation at 55 °C (131 °F)		± 1.0 % of full scale	
Digital resolution		16 bits	
Input value of LSB		1 mV	2 µA
Data type in application program		scalable from –32768 to 32767	
Input data out of detection range		yes	
Noise resistance	Maximum temporary deviation during perturbations	± 2.0 % of the full scale maximum when EMC perturbation is applied to the power and I/O wiring	
	Recommended cable type and length	twisted-pair shielded	
		< 30 m (98.4 ft)	
	Crosstalk (maximum)	80 dB	
Isolation	Between inputs and internal logic	isolated	
	Between inputs and output	not isolated	
Maximum continuous overload allowed (without damage)		30 Vdc	40 mA
Input filter		software filter: level 0...6. Refer to TMCR2AM3 cartridge configuration (see Modicon M100/M200 Logic Controller, Programming Guide) for details.	

Output Characteristics

The following table describes the output characteristics of the TMCR2AM3 cartridge:

Characteristics		Value	
		Voltage	**Current**
Rated output range		0...5 Vdc 0...10 Vdc	0...20 mA 4...20 mA
Load impedance		> 2 KΩ	< 500 Ω
Application load type		resistive load	
Total output system transfer time		1 ms + 1 scan time	
Maximum accuracy at ambient temperature: 25 °C (77 °F)		± 0.5 % of full scale	
Maximum output deviation at 55 °C (131 °F)		± 1.0 % of full scale	
Output ripple		± 20 mV	
Digital resolution		16 bits	
Output value of LSB		1 mV	2 µA
Data type in application program		scalable from –32768 to 32767	
Noise resistance	Maximum temporary deviation during perturbations	± 2.0 % of the full scale maximum when EMC perturbation is applied to the power and I/O wiring	

Characteristics		Value	
		Voltage	**Current**
	Recommended cable type and length	twisted-pair shielded	
		< 30 m (98.4 ft)	
	Crosstalk (maximum)	1 LSB	
Isolation	Between outputs and internal logic	isolated	
	Between inputs and outputs	not isolated	

TMCR2TI2 Characteristics

Introduction

The following features are integrated into the TMCR2TI2 cartridge:

- 2 analog temperature inputs (thermocouple or RTD)
- non-removable screw terminal block, 3.81 mm (0.15 in.) pitch

⚠ WARNING

UNINTENDED EQUIPMENT OPERATION

Do not exceed any of the rated values specified in the environmental and electrical characteristics tables.

Failure to follow these instructions can result in death, serious injury, or equipment damage.

Connectors

The following diagram shows a TMCR2TI2 cartridge marking and connectors:

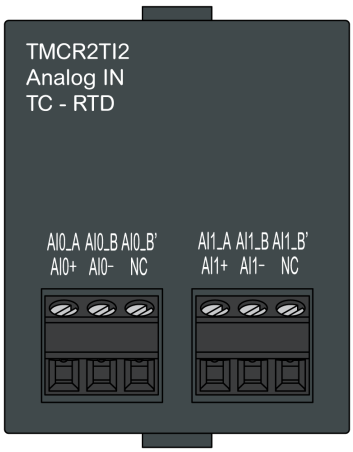

Main Characteristics

Characteristic	Value	
	Thermocouple	**3 wires RTD**
Number of input channels	2	
Input range	type: K, J, R, S, B, E, T, N, C	type: Pt100, Pt1000, Ni100, Ni1000

Characteristic	Value	
	Thermocouple	**3 wires RTD**
Resolution	Depends on signal type. Refer to Digital resolution, page 38.	
Connection type	3.81 mm (0.15 in.) pitch, non-removable screw terminal block	
Weight	15 g (0.53 oz)	

Input Characteristics

The following table describes the input characteristics of the TMCR2TI2 cartridge:

Characteristics	Value	
	Thermocouple	**3 wires RTD**
Rated input range	thermocouple type: K: –200...+1300 °C (–328...+2372 °F) J: –200...+1000 °C (–328...+1832 °F) R: 0...+1760 °C (+32...+3200 °F) S: 0...+1760 °C (+32...+3200 °F) B:0...+1820 °C (+32...+3308 °F) E: –200...+800 °C (–328...+1472 °F) T: –200...+400 °C (–328...+752 °F) N: –200...+1300 °C (–328...+2372 °F) C: 0...+2315 °C (+32...+4199 °F)	RTD type: Pt100: –200...+850 °C (–328...+1562 °F) Pt1000: –200...+600 °C (–328...+1112 °F) Ni100: –60...+180 °C (–76...+356 °F) Ni1000: –60...+180 °C (–76...+356 °F)
Input impedance	> 1 MΩ	
Sample duration time	125 ms per enabled channel	250 ms per enabled channel
Input type	single-ended	
Operating mode	self-scan	
Conversion mode	SAR type	
Maximum accuracy	± 0.1 % of full scale at ambient temperature: 25 °C (77 °F) Exception: R, S: ± 6 °C (10.8 °F): Measured temperature range: 0...200 °C (32...392 °F) B:Non-guaranteed: 0...300 °C (32...572 °F) K, J, E, T, N: ± 0.4 % of full scale at temperature < 0 °C (32 °F)	± 0.1 % of full scale at ambient temperature: 25 °C (77 °F)
Cold junction accuracy	± 4.0 °C (39.2 °F)	None
Temperature drift	± 0.02 % of full scale per 1 °C (1.8 °F)	
Repeatability after stabilization time	± 0.5 % of full scale	

Characteristics		Value	
		Thermocouple	**3 wires RTD**
Non-linearity		± 0.01 % of full scale	
Maximum input deviation		± 1.0 % of full scale	
Digital resolution		thermocouple type: K: 15000 steps J: 12000 steps R: 17600 steps S: 17600 steps B: 18200 steps E: 10000 steps T: 6000 steps N: 15000 steps C: 23150 steps	RTD type: Pt100: 10500 steps Pt1000: 8000 steps Ni100: 2400 steps Ni1000: 2400 steps
Input value of LSB		0.1 °C (0.18 °F)	
Data type in application program		scalable from –32768 to 32767	
Input data out of detection range		yes	
Noise resistance	Maximum temporary deviation during perturbations	± 4.0 % of the full scale maximum when EMC perturbation is applied to the power and I/O wiring	
	Recommended cable type and length	shielded	
		< 30 m (98.4 ft)	
	Crosstalk (maximum)	1 LSB	
Isolation between inputs and internal logic		not isolated	
Maximum continuous overload allowed (without damage)		13 Vdc	13 Vdc
Input filter		software filter: 0...10 s (with 0.1 s increment)	
Behavior when the temperature sensor is disconnected or broken		input value = upper limit	

TMCR2SL1 Characteristics

Introduction

The following features are integrated into the TMCR2SL1 cartridge:

- 1 serial line (RS232 or RS485)
- non-removable screw terminal block, 3.81 mm (0.15 in.) pitch

⚠ WARNING

UNINTENDED EQUIPMENT OPERATION

Do not exceed any of the rated values specified in the environmental and electrical characteristics tables.

Failure to follow these instructions can result in death, serious injury, or equipment damage.

Connectors

The following diagram shows a TMCR2SL1 cartridge marking and connectors:

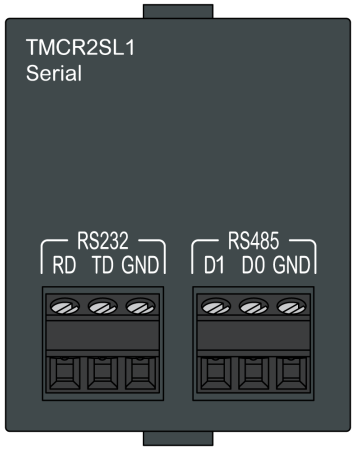

Main Characteristics

Characteristic	Value	
	Serial lineRS-232	**Serial line RS-485**
Number of channels	1	
Connection type	3.81 mm (0.15 in.) pitch, non-removable screw terminal block	
Weight	15 g (0.53 oz)	

Serial Line Characteristics

The following table describes the serial line characteristics of the TMCR2SL1 cartridge:

Characteristics		Value	
		RS-232	**RS-485**
Baudrate		1200...115200 bps	
Wires		RD, TD, GND	D1, D0, GND
Protocol selection		software programmable	
Line polarization		–	software programmable
Line end adapter in the cartridge		no	
Recommended cable	Type	shielded	
	Length	< 3 m (9.8 ft)	< 15 m (49.2 ft)
Isolation between lines and internal logic		not isolated	

TMCR2SL1A Characteristics

Introduction

The following features are integrated into the TMCR2SL1A cartridge:

- 1 serial line (isolated RS485)
- non-removable screw terminal block, 3.81 mm (0.15 in.) pitch

⚠ WARNING

UNINTENDED EQUIPMENT OPERATION

Do not exceed any of the rated values specified in the environmental and electrical characteristics tables.

Failure to follow these instructions can result in death, serious injury, or equipment damage.

Connectors

The following diagram shows a TMCR2SL1A cartridge marking and connectors:

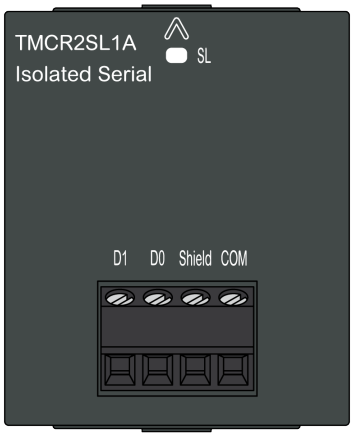

Main Characteristics

Characteristic	Value
Standard	isolated Serial line RS-485
Number of channels	1
Connection type	3.81 mm (0.15 in.) pitch, non-removable screw terminal block
Weight	14 g (0.49 oz)

Serial Line Characteristics

The following table describes the serial line characteristics of the TMCR2SL1A cartridge:

Characteristics		Value
Software configurable standard		RS-485
Baudrate		1200...115200 bps
Wires		D1, D0, Shield, COM
Protocol selection		software programmable
Line polarization		software programmable
Line end adapter in the cartridge		no
Recommended cable	Type	shielded
	Length	< 15 m (49.2 ft)
Isolation between lines and internal logic		isolated

TMCR2SL1S Characteristics

Introduction

The following features are integrated into the TMCR2SL1S cartridge:

- 1 serial line (isolated RS485)
- non-removable screw terminal block, 3.81 mm (0.15 in.) pitch

⚠ WARNING

UNINTENDED EQUIPMENT OPERATION

Do not exceed any of the rated values specified in the environmental and electrical characteristics tables.

Failure to follow these instructions can result in death, serious injury, or equipment damage.

Connectors

The following diagram shows a TMCR2SL1S cartridge marking and connectors:

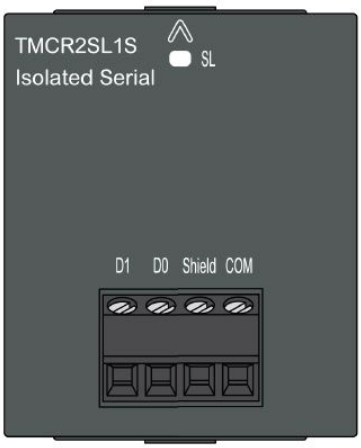

Main Characteristics

Characteristic	Value
Standard	isolated Serial line RS-485
Number of channels	1
Connection type	3.81 mm (0.15 in.) pitch, non-removable screw terminal block
Weight	14 g (0.49 oz)

Serial Line Characteristics

The following table describes the serial line characteristics of the TMCR2SL1S cartridge:

Characteristics	Value
Software configurable standard	RS-485
Baudrate	1200...115200 bps
Wires	D1, D0, Shield, COM

Characteristics		Value
Protocol selection		software programmable
Line polarization		software programmable
Line end adapter in the cartridge		no
Recommended cable	Type	shielded
	Length	< 15 m (49.2 ft)
Isolation between lines and internal logic		isolated

TM3R Expansion Modules

Overview

You can expand the number of I/Os of your M200 Logic Controller by adding TM3R expansion modules.

For the maximum number of expansion modules that can be added to a controller, refer to M200 Logic Controller *Maximum Hardware Configuration*, page 17.

TM3R Expansion Modules

Introduction

The range of TM3R expansion modules includes:

- Digital mixed input/output modules, page 57

TM3R Digital Mixed Input/Output Modules

This following table shows the TM3R mixed I/O modules, with corresponding channel type, nominal voltage/current, and terminal type:

Reference	Channels	Channel Type	Voltage Current	Terminal Type / Pitch
TM3RDM16R, page 44	8	Regular inputs	24 Vdc 5 mA	Removable screw terminal block / 3.81 mm (0.15 in.)
	8	Relay outputs	24 Vdc / 240 Vac 4 A maximum per common line / 2 A maximum per output	
TM3RDM32R, page 50	16	Regular inputs	24 Vdc 5 mA	Removable screw terminal blocks / 3.81 mm (0.15 in.)
	16	Relay outputs	24 Vdc / 240 Vac 4 A maximum per common line / 2 A maximum per output	

TM3RDM16R Characteristics

Introduction

This section describes the general characteristics of the TM3RDM16R expansion module.

See also Environmental Characteristics (see Modicon TM3, Digital I/O Modules, Hardware Guide).

⚠ DANGER

FIRE HAZARD

- Use only the correct wire sizes for the current capacity of the I/O channels and power supplies.
- For relay output (2 A) wiring, use conductors of at least 0.5 mm^2 (AWG 20) with a temperature rating of at least 80 °C (176 °F).
- For common conductors of relay output wiring (4 A), or relay output wiring greater than 2 A, use conductors of at least 1.0 mm^2 (AWG 16) with a temperature rating of at least 80 °C (176 °F).

Failure to follow these instructions will result in death or serious injury.

⚠ WARNING

UNINTENDED EQUIPMENT OPERATION

Do not exceed any of the rated values specified in the environmental and electrical characteristics tables.

Failure to follow these instructions can result in death, serious injury, or equipment damage.

Overview

TM3RDM16R digital expansion module:

- 8 channel 24 Vdc sink/source inputs
- 1 common line for inputs
- 8 channel 2 A relay outputs
- 2 common lines for outputs
- Removable screw terminal block

Status LEDs

The following figure shows the status LEDs:

This table describes the status LEDs:

LED	Color	Status	Type	Description
0...7	Green	On	Input	The channel is activated
		Off		The channel is deactivated
0...7	Green	On	Output	The channel is activated
		Off		The channel is deactivated

Dimensions

The following diagrams show the external dimensions for the TM3RDM16R expansion modules:

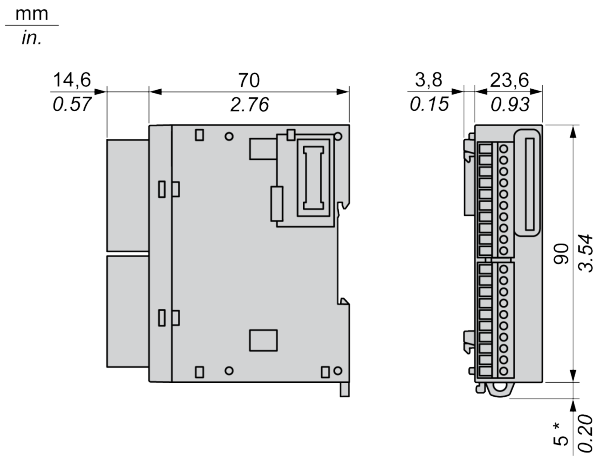

NOTE: * 8.5 mm (0.33 in.) when the clamp is pulled out.

Panel Mounting

Insert the mounting strip into the slot at the top of the module:

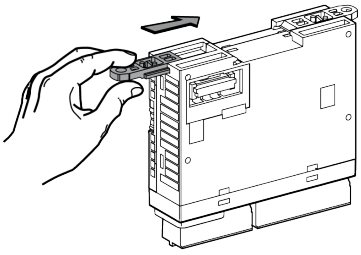

The following diagram shows the mounting holes layout for the TM3RDM16R expansion module:

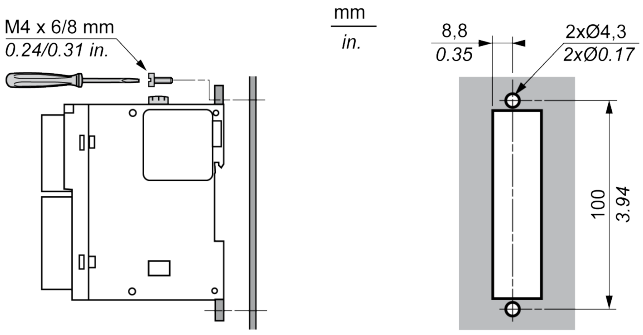

Main Characteristics

Characteristic		Value
Input		
Number of input channels		8 inputs
Input type		Type 1 (IEC/EN 61131-2)
Input Logic type		Sink/source
Rated input voltage		24 Vdc
Output		
Number of output channels		8 outputs
Output type		Relay
Contact type		NO (Normally Open)
Rated output voltage		24 Vdc / 240 Vac
Rated output current		2 A
Connection and cable types		
Connection type		Removable screw terminal block
Cable type and length	Type	Unshielded
	Length	Input: max. 50 m (164 ft) Output: max. 150 m (492 ft)
Weight		118 g (4.16 oz)

Input Characteristics

The table below describes the input characteristics of the TM3RDM16R:

Characteristic		Value
Number of input channels		8 inputs
Number of channels groups		1 common line for 8 channels
Input type		Type 1 (IEC/EN 61131-2)
Logic type		Sink/source
Rated input voltage		24 Vdc
Input voltage range		0...28.8 Vdc
Rated input current		5 mA
Input impedance		4.7 kΩ
Input limit values	Voltage at state 1	> 15 Vdc (15..28.8 Vdc)
	Voltage at state 0	< 5 Vdc (0..5 Vdc)
	Current at state 1	> 2.5 mA
	Current at state 0	< 1.5 mA
Turn on time		4 ms
Turn off time		4 ms
De-rating	0...55 °C (32...131 °F)	See Input de-rating, page 48
Isolation	Between input and internal logic	500 Vac / 800 Vdc
	Between input group and output group	1500 Vac / 2500 Vdc
	Between input groups	N/A
Connection type		Removable screw terminal block
Connector insertion/removal durability		Over 100 times
Current draw on 5 Vdc internal bus		70 mA
Current draw on 24 Vdc internal bus		40 mA

Input De-rating

When using TM3RDM16R:

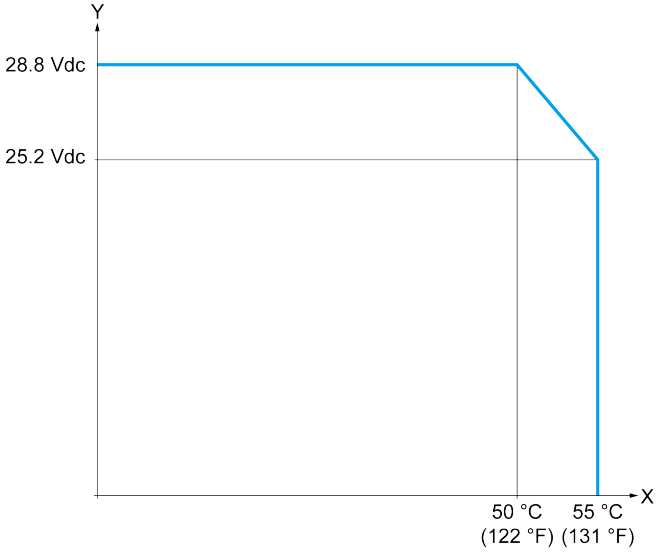

X Ambient temperature (°C / °F)

Y Input voltage (V)

At an ambient temperature of 55 °C (131 °F) in the horizontal mounting direction, limit the inputs and outputs, respectively, which turn on simultaneously as indicated by the X axis.

Output Characteristics

The table below describes the outputs characteristics of the TM3RDM16R:

Characteristic		Value
Number of output channels		8 outputs
Number of channel groups		2 common lines for 8 channels
Output type		Relay
Contact type		NO (Normally Open)
Rated output voltage		24 Vdc, 220 Vac
Maximum voltage		30 Vdc, 250 Vac
Rated output current		2 A per output
Maximum output current		2 A per output 4 A per common
Maximum output frequency	With max. load	0.1 Hz
	Without load	5 Hz
Turn on time		Max. 10 ms
Turn off time		Max. 10 ms
De-rating	0...55 °C (32...131 °F)	See Output de-rating, page 49
Mechanical life		20 million operations
Electrical life under resistive load 2 A		100,000 switching cycles at 45 °C (113 °F)
Protection against short circuit		No
Isolation	Between output and internal logic	1500 Vac / 2500 Vdc

Characteristic		Value
	Between input group and output group	1500 Vac / 2500 Vdc
	Between output groups	1500 Vac / 2500 Vdc
Connection type		Removable screw terminal block
Connector insertion/removal durability		Over 100 times
Current draw on 5 Vdc internal bus		70 mA
Current draw on 24 Vdc internal bus		40 mA
NOTE: Refer to Protecting Outputs from Inductive Load Damage, page 101 for additional information on this topic.		

Output De-rating

When using TM3RDM16R:

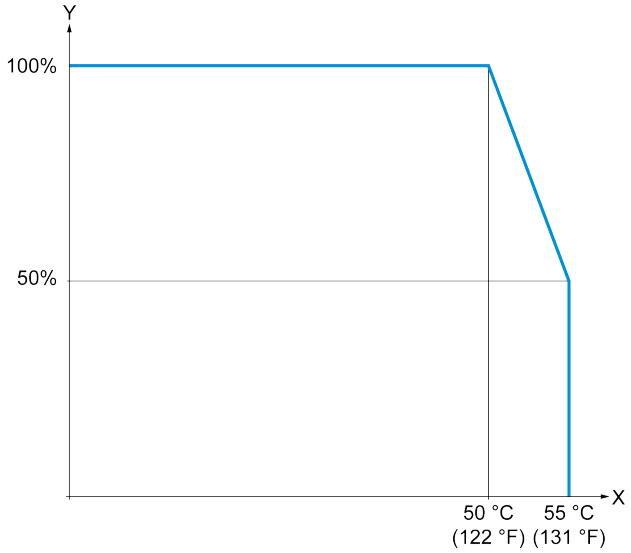

X Ambient temperature (°C / °F)

Y Output load current (%)

Power Limitation

This table describes the power limitation of the TM3RDM16R expansion module depending on the voltage, the type of load, and the number of operations required.

These expansion modules do not support capacitive loads.

⚠ WARNING

RELAY OUTPUTS WELDED CLOSED

- Always protect relay outputs from inductive alternating current load damage using an appropriate external protective circuit or device.
- Do not connect relay outputs to capacitive loads.

Failure to follow these instructions can result in death, serious injury, or equipment damage.

Power Limitations				
Voltage	**24 Vdc**	**120 Vac**	**240 Vac**	**Number of operations**
Power of resistive loads AC-12	–	240 VA 80 VA	480 VA 160 VA	100,000 300,000
Power of inductive loads AC-15 (cos ϕ = 0.35)	–	60 VA 18 VA	120 VA 36 VA	100,000 300,000
Power of inductive loads AC-14 (cos ϕ = 0.7)	–	120 VA 36 VA	240 VA 72 VA	100,000 300,000
Power of resistive loads DC-12	48 W 16 W	–	–	100,000 300,000
Power of inductive loads DC-13 L/R = 7 ms	24 W 7.2 W	–	–	100,000 300,000

TM3RDM32R Characteristics

Introduction

This section provides a description of the electrical and input/output characteristics of the TM3RDM32R expansion modules.

See also Environmental Characteristics (see Modicon TM3, Digital I/O Modules, Hardware Guide).

⚠ DANGER

FIRE HAZARD

- Use only the correct wire sizes for the current capacity of the I/O channels and power supplies.
- For relay output (2 A) wiring, use conductors of at least 0.5 mm^2 (AWG 20) with a temperature rating of at least 80 °C (176 °F).
- For common conductors of relay output wiring (4 A), or relay output wiring greater than 2 A, use conductors of at least 1.0 mm^2 (AWG 16) with a temperature rating of at least 80 °C (176 °F).

Failure to follow these instructions will result in death or serious injury.

⚠ WARNING

UNINTENDED EQUIPMENT OPERATION

Do not exceed any of the rated values specified in the environmental and electrical characteristics tables.

Failure to follow these instructions can result in death, serious injury, or equipment damage.

Overview

TM3RDM32R digital expansion module:

- 16 channel 24 Vdc sink/source inputs
- 2 common lines for inputs
- 16 channel 2 A relay outputs
- 4 common lines for outputs

- Removable screw terminal block

Status LEDs

The following figure shows the status LEDs:

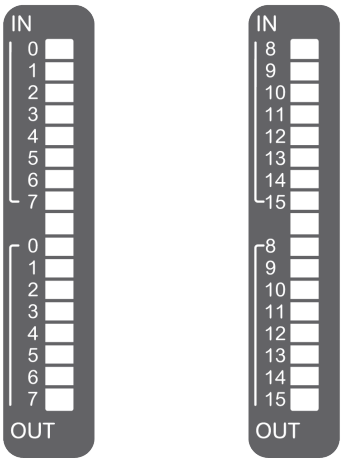

This table describes the status LEDs:

LED	Color	Status	Type	Description
0...15	Green	On	Input	The channel is activated
		Off		The channel is deactivated
0...15	Green	On	Output	The channel is activated
		Off		The channel is deactivated

Dimensions

The following diagrams show the external dimensions for the TM3RDM32R expansion modules:

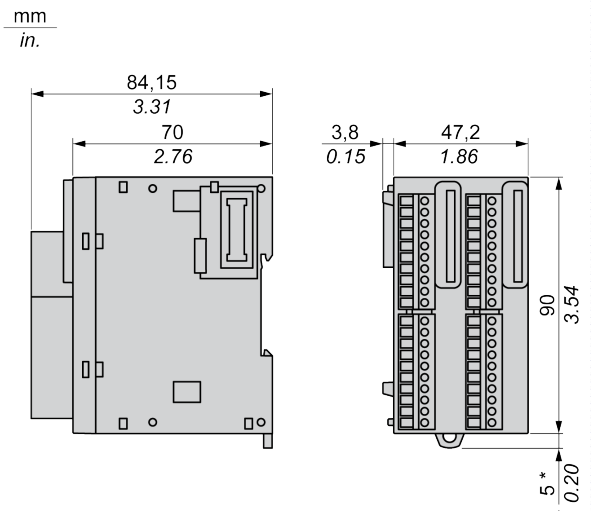

NOTE: * 8.5 mm (0.33 in) when the clamp is pulled out.

Panel Mounting

Insert the mounting strip into the slot at the top of the module:

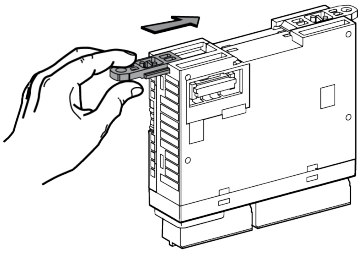

The following diagram shows the mounting holes layout for the TM3RDM32R expansion module:

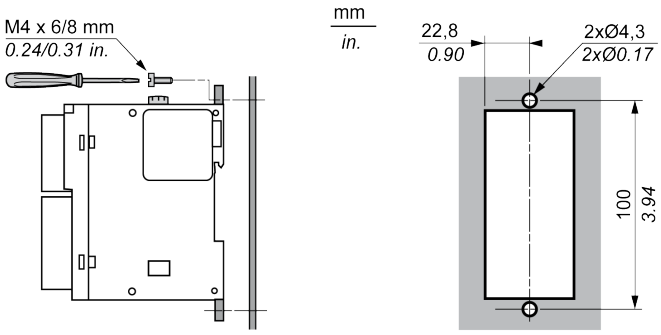

Main Characteristics

Characteristic		Value
Input		
Number of input channels		16 inputs
Input type		Type 1 (IEC/EN 61131-2)
Input Logic type		Sink/Source
Rated input voltage		24 Vdc
Output		
Number of output channels		16 outputs
Contact type		NO (Normally Open)
Rated output voltage		24 Vdc / 220 Vdc
Rated output current		2 A
Connection and cable types		
Connection type		Removable screw terminal blocks
Cable type and length	Type	Unshielded
	Length	Input: max. 50 m (164 ft) Output: max. 150 m (490 ft)
Weight		208 g (7.34 oz)

Input Characteristics

The table below describes the input characteristics of the TM3RDM32R:

Characteristic		Value
Number of input channels		16 inputs
Number of channels groups		2 common lines for 16 channels
Input type		Type 1 (IEC/EN 61131-2)
Logic type		Sink/source
Rated input voltage		24 Vdc
Input voltage range		0...28.8 Vdc
Rated input current		5 mA
Input impedance		4.7 kΩ
Input limit values	Voltage at state 1	> 15 Vdc (15...28.8 Vdc)
	Voltage at state 0	< 5 Vdc (0..5 Vdc)
	Current at state 1	> 2.5 mA
	Current at state 0	< 1.5 mA
Turn on time		4 ms
Turn off time		4 ms
De-rating	0...55 °C (32...131 °F)	See Input de-rating, page 54
Isolation	Between input and internal logic	500 Vac / 800 Vdc
	Between input group and output group	1500 Vac / 2500 Vdc
	Between input groups	500 Vac / 800 Vdc
Connection type		Removable screw terminal block
Connector insertion/removal durability		Over 100 times
Current draw on 5 Vdc internal bus		95 mA
Current draw on 24 Vdc internal bus		80 mA

Input De-rating

When using TM3RDM32R:

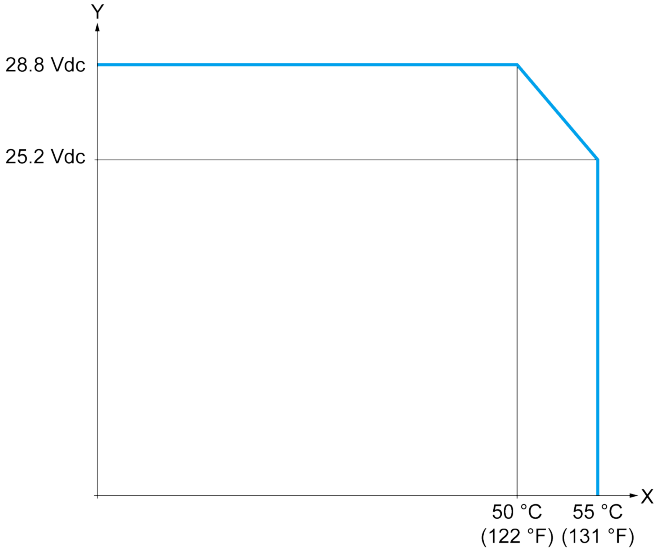

X Ambient temperature (°C / °F)

Y Input voltage

Output Characteristics

The table below describes the output characteristics of the TM3RDM32R

Characteristic		Value
Number of output channels		16
Number of channel groups		4 common line for 16 channels
Output type		Relay
Contact type		NO (Normally Open)
Rated output current		2 A per output
Maximum output current		2 A per output 4 A per common
Maximum output frequency	With max. load	0.1 Hz
	Without load	5 Hz
Turn on time		Max. 10 ms
Turn off time		Max. 10 ms
De-rating	0...55 °C (32...131 °F)	See Output de-rating, page 55
Mechanical life		20 million operations
Electrical life under resistive load 2 A		100,000 switching cycles at 45 °C (113 °F)
Protection against short circuit		No
Isolation	Between output and internal logic	1500 Vac / 2500 Vdc
	Between input group and output group	1500 Vac / 2500 Vdc
	Between output groups	1500 Vac / 2500 Vdc
Connection type		Removable screw terminal block

Characteristic	Value
Connector insertion/removal durability	Over 100 times
Current draw on 5 Vdc internal bus	95 mA
Current draw on 24 Vdc internal bus	80 mA
NOTE: Refer to Protecting Outputs from Inductive Load Damage, page 101 for additional information on this topic.	

Output De-rating

When using TM3RDM32R:

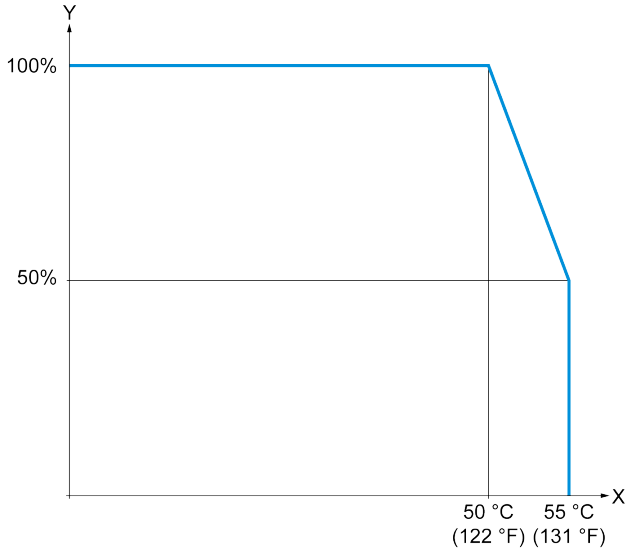

X Ambient temperature (°C / °F)

Y Output load current (%)

Power Limitation

This table describes the power limitation of the TM3RDM32R expansion modules depending on the voltage, the type of load, and the number of operations required.

These expansion modules do not support capacitive loads.

⚠ WARNING

RELAY OUTPUTS WELDED CLOSED

- Always protect relay outputs from inductive alternating current load damage using an appropriate external protective circuit or device.
- Do not connect relay outputs to capacitive loads.

Failure to follow these instructions can result in death, serious injury, or equipment damage.

Power Limitations				
Voltage	**24 Vdc**	**120 Vac**	**240 Vac**	**Number of operations**
Power of resistive loads	–	240 VA	480 VA	100,000
AC-12		80 VA	160 VA	300,000
Power of inductive loads	–	60 VA	120 VA	100,000
AC-15 (cos ϕ = 0.35)		18 VA	36 VA	300,000

Power Limitations				
Power of inductive loads AC-14 (cos ϕ = 0.7)	–	120 VA 36 VA	240 VA 72 VA	100,000 300,000
Power of resistive loads DC-12	48 W 16 W	–	–	100,000 300,000
Power of inductive loads DC-13 L/R = 7 ms	24 W 7.2 W	–	–	100,000 300,000

TM3 and TM2 Expansion Modules

Overview

You can expand the number of I/Os of your M200 Logic Controller by adding TM3 and TM2 expansion modules.

For the maximum number of expansion modules that can be added to a controller, refer to M200 Logic Controller *Maximum Hardware Configuration*, page 17.

TM3 Expansion Modules

Introduction

The range of TM3 expansion modules includes:

- Digital modules, classified as follows:
  - Input modules, page 56
  - Output modules, page 57
  - Mixed input/output modules, page 57
- Analog modules, classified as follows:
  - Input modules, page 58
  - Output modules, page 58
  - Mixed input/output modules, page 59

For more information, refer to the following documents:

- TM3 Digital I/O Modules Hardware Guide
- TM3 Analog I/O Modules Hardware Guide

TM3 Digital Input Modules

The following table shows the TM3 digital input expansion modules, with corresponding channel type, nominal voltage/current, and terminal type:

Reference	Channels	Channel Type	Voltage Current	Terminal Type / Pitch
TM3DI8	8	Regular inputs	24 Vdc 7 mA	Removable screw terminal block / 5.08 mm
TM3DI16	16	Regular inputs	24 Vdc 7 mA	Removable screw terminal blocks / 3.81 mm
TM3DI32K	32	Regular inputs	24 Vdc 5 mA	HE10 (MIL 20) connector

TM3 Digital Output Modules

The following table shows the TM3 digital output expansion modules, with corresponding channel type, nominal voltage/current, and terminal type:

Reference	Channels	Channel Type	Voltage Current	Terminal Type / Pitch
TM3DQ8R	8	Relay outputs	24 Vdc / 240 Vac 7 A maximum per common line / 2 A maximum per output	Removable screw terminal block / 5.08 mm
TM3DQ8T	8	Regular transistor outputs (source)	24 Vdc 4 A maximum per common line/0.5 A maximum per output	Removable screw terminal block / 5.08 mm
TM3DQ8U	8	Regular transistor outputs (sink)	24 Vdc 4 A maximum per common line/0.5 A maximum per output	Removable screw terminal block / 5.08 mm
TM3DQ16R	16	Relay outputs	24 Vdc / 240 Vac 8 A maximum per common line / 2 A maximum per output	Removable screw terminal blocks / 3.81 mm
TM3DQ16T	16	Regular transistor outputs (source)	24 Vdc 8 A maximum per common line / 0.5 A maximum per output	Removable screw terminal blocks / 3.81 mm
TM3DQ16U	16	Regular transistor outputs (sink)	24 Vdc 8 A maximum per common line / 0.5 A maximum per output	Removable screw terminal blocks / 3.81 mm
TM3DQ32TK	32	Regular transistor outputs (source)	24 Vdc 2 A maximum per common line / 0.1 A maximum per output	HE10 (MIL 20) connectors
TM3DQ32UK	32	Regular transistor outputs (sink)	24 Vdc 2 A maximum per common line / 0.1 A maximum per output	HE10 (MIL 20) connectors

TM3 Digital Mixed Input/Output Modules

This following table shows the TM3 mixed I/O modules, with corresponding channel type, nominal voltage/current, and terminal type:

Reference	Channels	Channel Type	Voltage Current	Terminal Type / Pitch
TM3DM8R	4	Regular inputs	24 Vdc 7 mA	Removable screw terminal block / 5.08 mm
	4	Relay outputs	24 Vdc / 240 Vac 7 A maximum per common line / 2 A maximum per output	
TM3DM24R	16	Regular inputs	24 Vdc 7 mA	Removable screw terminal blocks / 3.81 mm

Reference	Channels	Channel Type	Voltage Current	Terminal Type / Pitch
	8	Relay outputs	24 Vdc / 240 Vac 7 A maximum per common line / 2 A maximum per output	

TM3 Analog Input Modules

The following table shows the TM3 analog input expansion modules, with corresponding resolution, channel type, nominal voltage/current, and terminal type:

Reference	Resolution	Channels	Channel Type	Mode	Terminal Type / Pitch
TM3AI2H	16 bit, or 15 bit + sign	2	inputs	0...10 Vdc -10…+10 Vdc 0...20 mA 4...20 mA	Removable screw terminal block / 5.08 mm
TM3AI4	12 bit, or 11 bit + sign	4	inputs	0...10 Vdc -10…+10 Vdc 0...20 mA 4...20 mA	Removable screw terminal block / 3.81 mm
TM3AI8	12 bit, or 11 bit + sign	8	inputs	0...10 Vdc -10…+10 Vdc 0...20 mA 4...20 mA 0...20 mA extented 4...20 mA extented	Removable screw terminal block / 3.81 mm
TM3TI4	16 bit, or 15 bit + sign	4	inputs	0...10 Vdc -10…+10 Vdc 0...20 mA 4...20 mA Thermocouple PT100/1000 NI100/1000	Removable screw terminal block / 3.81 mm
TM3TI8T	16 bit, or 15 bit + sign	8	inputs	Thermocouple NTC/PTC Ohmmeter	Removable screw terminal block / 3.81 mm

TM3 Analog Output Modules

The following table shows the TM3 analog output modules, with corresponding resolution, channel type, nominal voltage/current, and terminal type:

Reference	Resolution	Channels	Channel Type	Mode	Terminal Type / Pitch
TM3AQ2	12 bit, or 11 bit + sign	2	outputs	0...10 Vdc -10…+10 Vdc 0...20 mA 4...20 mA	Removable screw terminal block / 5.08 mm
TM3AQ4	12 bit, or 11 bit + sign	4	outputs	0...10 Vdc -10…+10 Vdc 0...20 mA 4...20 mA	Removable screw terminal block / 5.08 mm

TM3 Analog Mixed Input/Output Modules

This following table shows the TM3 analog mixed I/O modules, with corresponding resolution, channel type, nominal voltage/current, and terminal type:

Reference	Resolution	Channels	Channel Type	Mode	Terminal Type / Pitch
TM3AM6	12 bit, or 11 bit + sign	4	inputs	0...10 Vdc -10...+10 Vdc 0...20 mA 4...20 mA	Removable spring terminal block / 3.81 mm
		2	outputs		
TM3TM3	16 bit, or 15 bit + sign	2	inputs	0...10 Vdc -10...+10 Vdc 0...20 mA 4...20 mA Thermocouple PT100/1000 NI100/1000	Removable screw terminal block / 5.08 mm
	12 bit, or 11 bit + sign	1	outputs	0...10 Vdc -10...+10 Vdc 0...20 mA 4...20 mA	

TM2 Expansion Modules

Overview

The range of TM2 expansion modules includes:

- Digital modules, classified as follows:
  - Input modules, page 60
  - Output modules, page 60
  - Mixed input/output modules, page 61
- Analog modules, classified as follows:
  - Input modules, page 61
  - Output modules, page 62
  - Mixed input/output modules, page 62

For more information, refer to the following documents:

- TM2 Digital I/O Expansion Modules Hardware Guide
- TM2 Analog I/O Expansion Modules Hardware Guide

NOTICE

INOPERABLE EQUIPMENT

TM2 modules can only be used in the local configuration, and only if there is no TM3 transmitter and receiver modules present in the configuration.

Failure to follow these instructions can result in equipment damage.

NOTICE

INOPERABLE EQUIPMENT

It is prohibited to mount a TM2 module before any TM3 module. The TM2 modules must be mounted and configured at the end of the local configuration.

Failure to follow these instructions can result in equipment damage.

TM2 Digital Input Expansion Modules

The following table shows the compatible TM2 digital input expansion modules with the corresponding channel type, nominal voltage/current, and terminal type:

Reference	Channels	Channel Type	Voltage Current	Terminal Type
TM2DAI8DT	8	Regular inputs	120 Vac 7.5 mA	Removable screw terminal block
TM2DDI8DT	8	Regular inputs	24 Vdc 7 mA	Removable screw terminal block
TM2DDI16DT	16	Regular inputs	24 Vdc 7 mA	Removable screw terminal block
TM2DDI16DK	16	Regular inputs	24 Vdc 5 mA	HE10 (MIL 20) connector
TM2DDI32DK	32	Regular inputs	24 Vdc 5 mA	HE10 (MIL 20) connector

TM2 Digital Output Expansion Modules

The following table shows the compatible TM2 digital output expansion modules with the corresponding channel type, nominal voltage/current, and terminal type:

Reference	Channels	Channel type	Voltage Current	Terminal type
TM2DRA8RT	8	Relay outputs	30 Vdc / 240 Vac 2 A max	Removable screw terminal block
TM2DRA16RT	16	Relay outputs	30 Vdc / 240 Vac 2 A max	Removable screw terminal block
TM2DDO8UT	8	Regular transistor outputs (sink)	24 Vdc 0.3 A max per output	Removable screw terminal block

Reference	Channels	Channel type	Voltage Current	Terminal type
TM2DDO8TT	8	Regular transistor outputs (source)	24 Vdc 0.5 A max per output	Removable screw terminal block
TM2DDO16UK	16	Regular transistor outputs (sink)	24 Vdc 0.1 A max per output	HE10 (MIL 20) connector
TM2DDO16TK	16	Regular transistor outputs (source)	24 Vdc 0.4 A max per output	HE10 (MIL 20) connector
TM2DDO32UK	32	Regular transistor outputs (sink)	24 Vdc 0.1 A max per output	HE10 (MIL 20) connector
TM2DDO32TK	32	Regular transistor outputs (source)	24 Vdc 0.4 A max per output	HE10 (MIL 20) connector

TM2 Digital Mixed Input/Output Expansion Modules

The following table shows the compatible TM2 digital mixed I/O expansion modules with the corresponding channel type, nominal voltage/current, and terminal type:

Reference	Channels	Channel type	Voltage Current	Terminal type
TM2DMM8DRT	4	Regular inputs	24 Vdc 7 mA	Removable screw terminal block
	4	Relay outputs	24 Vdc / 240 Vac 7 A maximum per common line / 2 A maximum per output	
TM2DMM24DRF	16	Regular inputs	24 Vdc 7 mA	Non-removable spring terminal block
	8	Relay outputs	24 Vdc / 240 Vac 7 A maximum per common line / 2 A maximum per output	

TM2 Analog Input Expansion Modules

The following table shows the compatible TM2 analog input expansion modules with the corresponding channel type, nominal voltage/current, and terminal type:

Reference	Channels	Channel type	Voltage Current	Terminal Type
TM2AMI2HT	2	High-level inputs	0...10 Vdc 4...20 mA	Removable screw terminal block
TM2AMI2LT	2	Low-level inputs	Thermocouple type J, K,T	Removable screw terminal block
TM2AMI4LT	4	Analog inputs	0...10 Vdc 0...20 mA PT100/1000 Ni100/1000	Removable screw terminal block
TM2AMI8HT	8	Analog inputs	0...20 mA 0...10 Vdc	Removable screw terminal block

Reference	Channels	Channel type	Voltage Current	Terminal Type
TM2ARI8HT	8	Analog inputs	NTC / PTC	Removable screw terminal block
TM2ARI8LRJ	8	Analog inputs	PT100/1000	RJ11 connector
TM2ARI8LT	8	Analog inputs	PT100/1000	Removable screw terminal block

TM2 Analog Output Expansion Modules

The following table shows the compatible TM2 analog output expansion modules with the corresponding channel type, nominal voltage/current, and terminal type:

Reference	Channels	Channel type	Voltage Current	Terminal Type
TM2AMO1HT	1	Analog outputs	0...10 Vdc 4...20 mA	Removable screw terminal block
TM2AVO2HT	2	Analog outputs	+/- 10 Vdc	Removable screw terminal block

TM2 Analog Mixed Input/Output Expansion Modules

The following table shows the compatible TM2 analog mixed I/O expansion modules with the corresponding channel type, nominal voltage/current, and terminal type:

Reference	Channels	Channel type	Voltage Current	Terminal Type
TM2AMM3HT	2	Analog inputs	0...10 Vdc 4...20 mA	Removable screw terminal block
	1	Analog outputs	0...10 Vdc 4...20 mA	
TM2AMM6HT	4	Analog inputs	0...10 Vdc 4...20 mA	Removable screw terminal block
	2	Analog outputs	0...10 Vdc 4...20 mA	
TM2ALM3LT	2	Low-level inputs	Thermo J,K,T, PT100	Removable screw terminal block
	1	Analog outputs	0...10 Vdc 4...20 mA	

M100/M200 Logic Controller Environmental Information

Environmental Characteristics

Enclosure Requirements

M100/M200 Logic Controller system components are designed as Zone B, Class A industrial equipment according to IEC/CISPR Publication 11. If they are used in environments other than those described in the standard, or in environments that do not meet the specifications in this manual, the ability to meet electromagnetic compatibility requirements in the presence of conducted and/or radiated interference may be reduced.

All M100/M200 Logic Controller system components meet European Community (CE) requirements for open equipment as defined by IEC/EN 61131-2. You must install them in an enclosure designed for the specific environmental conditions and to minimize the possibility of unintended contact with hazardous voltages.

Use metal enclosures to improve the electromagnetic immunity of your M100/M200 Logic Controller system. Use enclosures with a keyed locking mechanism to minimize unauthorized access.

Environmental Characteristics

All the M100/M200 Logic Controller module components are electrically isolated between the internal electronic circuit and the input/output channels within the limits set forth and described by these environmental characteristics. For more information on electrical isolation, see the technical specifications of your particular controller found later in the current document. This equipment meets CE requirements as indicated in the table below. This equipment is intended for use in a Pollution Degree 2 industrial environment.

⚠ WARNING

UNINTENDED EQUIPMENT OPERATION

Do not exceed any of the rated values specified in the environmental and electrical characteristics tables.

Failure to follow these instructions can result in death, serious injury, or equipment damage.

The following table shows the general environmental characteristics:

Characteristic		Specification
Standard compliance	IEC/EN 61131-2 IEC/EN 61010-2-201	
Ambient operating temperature	Horizontal installation	0...55 °C (32...131 °F)
Storage temperature		–25...70 °C (- 13...158 °F)
Relative humidity	Transport and storage	5...95 % (non-condensing)
	Operation	5...95 % (non-condensing)
Degree of pollution	IEC/EN 60664-1	2
Degree of protection	IEC/EN 61131-2	IP20 with protective covers in place
Machine Safety conformance	IEC/EN 61010-2-201	Yes
Corrosion immunity		Atmosphere free from corrosive gases
Operating altitude		0...2000 m (0...6560 ft)
Storage altitude		0...3000 m (0...9843 ft)
Vibration resistance	IEC/EN 61131-2 Panel mounting or mounted on a top hat section rail (DIN rail)	• DIN installation: 5...8.4 Hz, 3.5 mm fixed amplitude; 8.4...150 Hz, acceleration 1 g; X/Y/Z directions vibration 10 times. • Panel installation: 5...8.7 Hz, 7.5 mm fixed amplitude; 8.7...150 Hz, acceleration 2 g; X/Y/Z directions vibration 10 times.
Mechanical shock resistance		• DIN installation: Acceleration 15 g, action time: 11 ms; X/Y/Z vibration in each direction 3 times. • Panel installation: Acceleration 30 g, action time: 6 ms; X/Y/Z vibration in each direction 3 times.

Electromagnetic Susceptibility

The M100/M200 Logic Controller system meets electromagnetic susceptibility specifications as indicated in the following table:

Characteristic	Designed to specification	Range		
Electrostatic discharge	IEC/EN 61000-4-2	8 kV (air discharge) 6 kV (contact discharge)		
Radiated electromagnetic field	IEC/EN 61000-4-3	10 V/m (80 MHz...3 GHz) Sinus amplitude modulated 80% / 1 kHz + Internal clock frequency		
Fast transients burst	IEC/EN 61000-4-4	AC/DC Power lines	2 kV	
		Relay Outputs	2 kV	
		24 Vdc I/Os	1 kV	
		Communication line	1 kV	
Surge immunity	IEC/EN 61000-4-5 IEC/EN 61131-2	–	CM[1]	DM[2]
		DC Power lines	1.1 kV	0.5 kV
		AC Power lines	2.2 kV	1.1 kV
		AC I/Os	2.2 kV	1.1 kV
		24 Vdc I/Os	1.1 kV	0.5 kV
		Shielded cable (between shield and ground)	1.1 kV	–
Induced electromagnetic field	IEC/EN 61000-4-6	10 V (0.15 MHz...80MHz) + spot frequencies Sinus amplitude modulated 80% / 1KHz		
Conducted emission	IEC/EN 55011 (IEC/CISPR Publication 11)	• 0.15...0.5 MHz: 79 dBµV/m QP / 66 dBµV/m AV • 0.5...30 MHz: 73 dBµV/m QP / 60 dBµV/m AV		
Radiated emission	IEC/EN 55011 (IEC/CISPR Publication 11)	Class A, 10 m distance: • 30...230 MHz: 40 dBµV/m QP • 230...1000 MHz: 47 dBµV/m QP		
[1] Common Mode [2] Differential Mode				

Certifications and Standards

Introduction

The M100/M200 Logic Controllers are designed to conform to the main national and international standards concerning electronic industrial control devices:

- IEC/EN 61131-2

The M100/M200 Logic Controllers have obtained:

- CE
- EAC*
- RCM*

Some modules have not been certified by EAC & RCM. Please go to www.se.com/ww/en/ and you can download EAC certificate and check specific modules certified by EAC.

Modicon M100/M200 Logic Controller Management

What's in This Chapter

Input Management 65
Output Management 69
Run/Stop 75
Micro SD Card 76
M200 Logic Controller Real Time Clock (RTC) 79
Status LEDs 82

Input Management

Overview

The M100/M200 Logic Controller features digital inputs, including 4 fast inputs.

The following functions are configurable:

- Filters (depends on the function associated with the input).
- All inputs can be used for the Run/Stop function.
- 4 fast inputs can be either latched or used for events (rising edge, falling edge, or both) and thus be linked to an event task.

NOTE: All inputs can be used as regular inputs.

Integrator Filter Principle

The filter is designed to reduce the bouncing effect at the inputs. Setting a filter value helps the controller to ignore sudden changes of input levels caused by induction of electromagnetic interference.

The following timing diagram illustrates the filter effects:

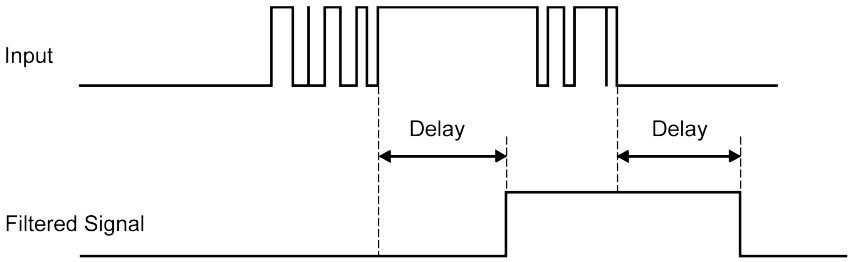

Bounce Filter Availability

The bounce filter can be used on a fast input when:

- Using a latch or event
- HSC is enabled

Latching

Latching is a function that can be assigned to the M100/M200 Logic Controller fast inputs. This function is used to memorize (or latch) any pulse with a duration that is less than the M100/M200 Logic Controller scan time. When a pulse is shorter than one scan, the controller latches the pulse, which is then updated in the next scan. This latching mechanism only recognizes rising edges. Falling edges cannot

be latched. Assigning inputs to be latched is done in the **Configuration** tab in EcoStruxure Machine Expert-Basic.

The following timing diagram illustrates the latching effects:

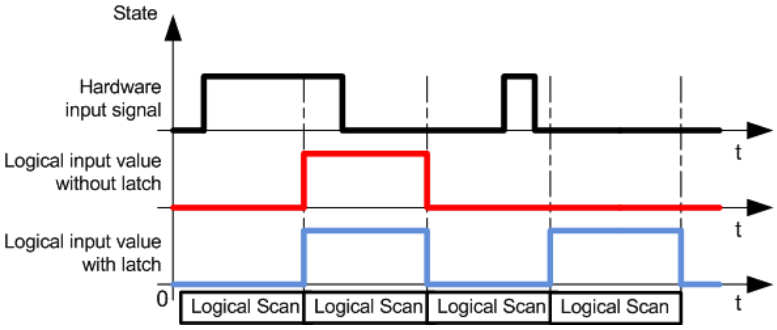

Event

An input configured for events can be associated with an event task.

Run/Stop

The Run/Stop function is used to start or stop an application program using an input. In addition to the embedded Run/Stop switch, you can configure one (and only one) input as an additional Run/Stop command.

For more information, refer to the Run/Stop, page 75.

⚠WARNING

UNINTENDED MACHINE OR PROCESS START-UP

- Verify the state of security of your machine or process environment before applying power to the Run/Stop input.
- Use the Run/Stop input to help prevent the unintentional start-up from a remote location.

Failure to follow these instructions can result in death, serious injury, or equipment damage.

Input Management Functions Availability

Embedded digital inputs can be configured as functions (Run/Stop, Latch, Event, Fast Counter, HSC, PTO).

Inputs not configured as functions are used as regular inputs.

You can use filters and functions to manage the controller inputs, page 65.

TM200•••R Logic Controller Inputs

The following table shows the possible usage of the M100/M200 Logic Controller (TM200•••R) inputs, depending on the controller reference:

Function		Input Function				Single Phase HSC	Main HSC0	Main HSC1	FC
		None	Run/ Stop	Latch	Event				
Fast Input(1)	I0	X	X	–	–	HSC0	X	–	–
	I1	X	X	–	–	HSC2	X	–	–
	I2	X	X	X	X	Preset for Single Phase HSC0	Preset	–	FC0
	I3	X	X	X	X	Capture for Single Phase HSC0	Capture	–	FC1
	I4	X	X	X	X	Capture for Single Phase HSC1	–	Capture	FC2
	I5	X	X	X	X	Preset for Single Phase HSC1	–	Preset	FC3
	I6	X	X	–	–	HSC1	–	X	–
	I7	X	X	–	–	HSC3	–	X	–
Regular Input	I8	X	X	–	–	–	–	–	–
	I9	X	X	–	–	–	–	–	–
	I10	X	X	–	–	–	–	–	–
	I11	X	X	–	–	–	–	–	–
	I12	X	X	–	–	–	–	–	–
	I13	X	X	–	–	–	–	–	–
	I14	X	X	–	–	–	–	–	–
	I15	X	X	–	–	–	–	–	–
	I16	X	X	–	–	–	–	–	–
	I17	X	X	–	–	–	–	–	–
	I18	X	X	–	–	–	–	–	–
	I19	X	X	–	–	–	–	–	–
	I20	X	X	–	–	–	–	–	–
	I21	X	X	–	–	–	–	–	–
	I22	X	X	–	–	–	–	–	–
	I23	X	X	–	–	–	–	–	–
	I24	X	X	–	–	–	–	–	–
	I25	X	X	–	–	–	–	–	–
	I26	X	X	–	–	–	–	–	–
	I27	X	X	–	–	–	–	–	–
	I28	X	X	–	–	–	–	–	–
	I29	X	X	–	–	–	–	–	–
	I30	X	X	–	–	–	–	–	–
	I31	X	X	–	–	–	–	–	–
	I32	X	X	–	–	–	–	–	–
	I33	X	X	–	–	–	–	–	–
	I34	X	X	–	–	–	–	–	–
	I35	X	X	–	–	–	–	–	–

X Yes

– No

(1) Can also be used as a regular input. But only one function can be implemented. If I2...I5 are used, for example, as HSC preset and capture function, they cannot be used as FC function and interrupt function.

TM100•••RN Logic Controller Inputs

The following table shows the possible usage of the TM100C••RN inputs, depending on the controller reference:

Function		Input Function				Single Phase HSC	Main HSC0	Main HSC1	FC
		None	Run/ Stop	Latch	Event				
Fast Input(1)	I0	X	X	–	–	HSC0	X	–	–
	I1	X	X	–	–	HSC1	X	–	–
	I2	X	X	X	X	Preset for Single Phase HSC0	Preset	–	FC0
	I3	X	X	X	X	Capture for Single Phase HSC0	Capture	–	FC1
	I4	X	X	X	X	–	–	–	FC2
	I5	X	X	X	X	–	–	–	FC3
	I6	X	X	–	–	–	–	–	–
	I7	X	X	–	–	–	–	–	–
Regular Input	I8	X	X	–	–	–	–	–	–
	I9	X	X	–	–	–	–	–	–
	I10	X	X	–	–	–	–	–	–
	I11	X	X	–	–	–	–	–	–
	I12	X	X	–	–	–	–	–	–
	I13	X	X	–	–	–	–	–	–
	I14	X	X	–	–	–	–	–	–
	I15	X	X	–	–	–	–	–	–
	I16	X	X	–	–	–	–	–	–
	I17	X	X	–	–	–	–	–	–
	I18	X	X	–	–	–	–	–	–
	I19	X	X	–	–	–	–	–	–
	I20	X	X	–	–	–	–	–	–
	I21	X	X	–	–	–	–	–	–
	I22	X	X	–	–	–	–	–	–
	I23	X	X	–	–	–	–	–	–

X Yes

– No

(1) Can also be used as a regular input. But only one function can be implemented. If I2...I5 are used, for example, as HSC preset and capture function, they cannot be used as FC function and interrupt function.

TM200•••U / TM200•••T Logic Controller Inputs

The following table shows the possible usage of the M200 Logic Controller (TM200•••U and TM200•••T) inputs, depending on the controller reference:

Function		Input Function				Single phase HSC	HSC0	HSC1	PTO0	PTO1	FC
		None	Run/ Stop	Latch	Event						
Fast Input(1)	I0	X	X	–	–	HSC0	X	–	–	–	–
	I1	X	X	–	–	HSC2	X	–	–	–	–

Function		Input Function				Single phase HSC	HSC0	HSC1	PTO0	PTO1	FC
		None	Run/ Stop	Latch	Event						
	I2	X	X	X	X	Preset for Single Phase HSC0	Preset	–	Origin(2)	–	FC0
	I3	X	X	X	X	Capture for Single Phase HSC0	Capture	–	–	–	FC1
	I4	X	X	X	X	Capture for Single Phase HSC1	–	Capture	Touch Probe(2)	–	FC2
	I5	X	X	X	X	Preset for Single Phase HSC1	–	Preset	–	Touch Probe(2)	FC3
	I6	X	X	–	–	HSC1	–	X	–	–	–
	I7	X	X	–	–	HSC3	–	X	–	–	–
Regular Input	I8	X	X	–	–	–	–	–	Origin(3)	Origin(2)	–
	I9	X	X	–	–	–	–	–	–	–	–
	I10	X	X	–	–	–	–	–	–	Origin(3)	–
	I11	X	X	–	–	–	–	–	–	–	–
	I12	X	X	–	–	–	–	–	Touch Probe(3)	–	–
	I13	X	X	–	–	–	–	–	–	Touch Probe(3)	–
	I14	X	X	–	–	–	–	–	–	–	–
	I15	X	X	–	–	–	–	–	–	–	–
	I16	X	–	–	–	–	–	–	–	–	–
	I17	X	X	–	–	–	–	–	–	–	–
	I18	X	X	–	–	–	–	–	–	–	–
	I19	X	X	–	–	–	–	–	–	–	–
	I20	X	X	–	–	–	–	–	–	–	–
	I21	X	X	–	–	–	–	–	–	–	–
	I22	X	X	–	–	–	–	–	–	–	–
	I23	X	X	–	–	–	–	–	–	–	–

X Yes

– No

(1) Can also be used as a regular input. But only one function can be implemented. If I2...I5 are used, for example, as HSC preset and capture function, they cannot be used as FC function and interrupt function.

(2) Only for TM200C16U and TM200C16T.

(3) Only for TM200C24U, TM200CE24U, TM200C40U,TM200CE40U, TM200C24T, TM200CE24T, TM200C40T, and TM200CE40T.

Output Management

Introduction

The M100 Logic Controller has only relay outputs.

The M200 Logic Controller has relay, regular, and fast transistor outputs (PTO / PWM / PLS/ FREQGEN).

The following output functions are configurable on the relay and transistor outputs:

- Alarm output
- HSC (reflex features on HSC threshold)
- PTO
- PWM
- PLS
- FREQGEN

NOTE: All fast outputs can be used as regular outputs.

Relay Output Management Availability

The information below refers to M100/M200 Logic Controllers (TM200•••R) with relay outputs, depending on the controller reference:

Function		Alarm Output	HSC0	HSC1
Regular Output	Q0	X	HSC0 reflex output0	–
	Q1	X	HSC0 reflex output1	–
	Q2	X	–	HSC1 reflex output0
	Q3	X	–	HSC1 reflex output1
	Q4	X	–	–
	Q5	X	–	–
	Q6	X	–	–
	Q7	X	–	–
	Q8	–	–	–
	Q9	–	–	–
	Q10	–	–	–
	Q11	–	–	–
	Q12	–	–	–
	Q13	–	–	–
	Q14	–	–	–
	Q15	–	–	–
	Q16	–	–	–
	Q17	–	–	–
	Q18	–	–	–
	Q19	–	–	–
	Q20	–	–	–
	Q21	–	–	–
	Q22	–	–	–
	Q23	–	–	–

The information below refers to TM100C••RN Logic Controllers with relay outputs, depending on the controller reference:

Function		Alarm Output	HSC0	HSC1
Regular Output	Q0	X	HSC0 reflex output0	–
	Q1	X	HSC0 reflex output1	–
	Q2	X	–	–
	Q3	X	–	–
	Q4	X	–	–

Function		Alarm Output	HSC0	HSC1
	Q5	X	–	–
	Q6	X	–	–
	Q7	X	–	–
	Q8	–	–	–
	Q9	–	–	–
	Q10	–	–	–
	Q11	–	–	–
	Q12	–	–	–
	Q13	–	–	–
	Q14	–	–	–
	Q15	–	–	–
	Q16	–	–	–
	Q17	–	–	–
	Q18	–	–	–
	Q19	–	–	–
	Q20	–	–	–
	Q21	–	–	–
	Q22	–	–	–
	Q23	–	–	–

Transistor Output Management Availability

The information below refers to M200 Logic Controllers (TM200•••U and TM200•••T) with transistor outputs:

Function		Alarm Output	PTO0 Pulse + Direction	PTO1 Pulse + Direction	PTO0 CW/ CCW	PLS	PWM	FREQGEN	HSC
Fast Output[1]	Q0	X	PTO0 output0	PTO1 output1	PTO0 output0	PLS0	PWM0	FREQGEN0	–
	Q1	X	PTO0 output1	PTO1 output0	PTO0 output1	PLS1	PWM1	FREQGEN1	–
	Q2	X	PTO0 output1	PTO1 output1	–	–	–	–	–
	Q3	X	PTO0 output1	PTO1 output1	–	–	–	–	–
Regular Output	Q4	X	PTO0 output1	PTO1 output1	–	–	–	–	HSC0 reflex output0
	Q5	X	PTO0 output1	PTO1 output1	–	–	–	–	HSC0 reflex output1
	Q6	X	PTO0 output1	PTO1 output1	–	–	–	–	HSC1 reflex output0
	Q7	X	PTO0 output1	PTO1 output1	–	–	–	–	HSC1 reflex output1
	Q8	–	PTO0 output1	PTO1 output1	–	–	–	–	–

Function		Alarm Output	PTO0 Pulse + Direction	PTO1 Pulse + Direction	PTO0 CW/ CCW	PLS	PWM	FREQGEN	HSC
	Q9	–	PTO0 output1	PTO1 output1	–	–	–	–	–
	Q10	–	PTO0 output1	PTO1 output1	–	–	–	–	–
	Q11	–	PTO0 output1	PTO1 output1	–	–	–	–	–
	Q12	–	PTO0 output1	PTO1 output1	–	–	–	–	–
	Q13	–	PTO0 output1	PTO1 output1	–	–	–	–	–
	Q14	–	PTO0 output1	PTO1 output1	–	–	–	–	–
	Q15	–	PTO0 output1	PTO1 output1	–	–	–	–	–
[1] Can also be used as a regular output. But only 1 function can be implemented. If Q0...Q3 are configured as HSC reflex outputs, they cannot be used as regular outputs.									

Fallback Modes (Behavior for Outputs in Stop)

When the controller enters the STOPPED or one of the exception states for any reason, the local (embedded and expansion) outputs are set to **Default Value** defined in the application.

In case of PTO outputs, the fallback values are forced to 0 logic (0 Vdc) and these values cannot be modified.

Short-Circuit or Over-Current on Outputs for TM100C••RN and TM200C•••R

For TM100C••RN and TM200C•••R, in the case of short-circuit or over-current in outputs, the following **relay outputs** are considered:

- Q0...Q6 for TM100C16RN and TM200C16R
- Q0...Q9 for TM100C24RN and TM200C•24R
- Q0...Q11 for TM100C32RN and TM200C•32R
- Q0...Q15 for TM100C40RN and TM200C•40R
- Q0...Q23 for TM200C•60R

The following table describes the actions taken on short-circuits of relay outputs:

If...	Then...
you have a short-circuit at 0 V or 24 V	no action is taken and no error is detected.

Short-Circuit or Over-Current on Outputs for TM200C•••U

For TM200C•••U, in the case of short-circuit or over-current in outputs, the following **transistor sink outputs** are considered:

- Q0...Q6 for TM200C•16U

  For TM200C•16U, in the case of short-circuit or over-current in outputs, there are different considerations for the following groups of outputs:

  - Group 1 (Q0...Q3): Four transistor sink outputs
  - Group 2 (Q4...Q6): Three transistor sink outputs

The following table describes the actions taken on short-circuit detection:

If...	Then...
you have a short-circuit at 24 V on group 1 or 2	the impacted group automatically goes into over-current protection mode (all outputs set to 0) and the group is re-armed every 1 second to test the connection state. For more information, refer to regular outputs wiring diagram, page 126.
you have a short-circuit at 0 V on group 1 or 2	no action is taken; however, no damage to the equipment is possible

- Q0...Q9 for TM200C•24U

  For TM200C•24U, in the case of short-circuit or over-current in outputs, there are different considerations for the following groups of outputs:

  - Group 1 (Q0...Q3): Four transistor sink outputs
  - Group 2 (Q4...Q7): Four transistor sink outputs
  - Group 3 (Q8...Q9): Two transistor sink outputs

The following table describes the actions taken on short-circuit detection:

If...	Then...
you have a short-circuit at 24 V on group 1, 2, or 3	the impacted group automatically goes into over-current protection mode (all outputs set to 0) and the group is re-armed every 1 second to test the connection state. For more information, refer to regular outputs wiring diagram, page 126.
you have a short-circuit at 0 V on group 1, 2, or 3	no action is taken; however, no damage to the equipment is possible

- Q0...Q11 for TM200C•32U

  For TM200C•32U, in the case of short-circuit or over-current in outputs, there are different considerations for the following groups of outputs:

  - Group 1 (Q0...Q3): Four transistor sink outputs
  - Group 2 (Q4...Q7): Four transistor sink outputs
  - Group 3 (Q8...Q11): Two transistor sink outputs

The following table describes the actions taken on short-circuit detection:

If...	Then...
you have a short-circuit at 24 V on group 1, 2, or 3	the impacted group automatically goes into over-current protection mode (all outputs set to 0) and the group is re-armed every 1 second to test the connection state. For more information, refer to regular outputs wiring diagram, page 126.
you have a short-circuit at 0 V on group 1, 2, or 3	no action is taken; however, no damage to the equipment is possible

- Q0...Q15 for TM200C•40U

  For TM200C•40U, in the case of short-circuit or over-current in outputs, there are different considerations for the following groups of outputs:

  - Group 1 (Q0...Q3): Four transistor sink outputs
  - Group 2 (Q4...Q7): Four transistor sink outputs
  - Group 3 (Q8...Q11): Four transistor sink outputs
  - Group 4 (Q12...Q15): Four transistor sink outputs

The following table describes the actions taken on short-circuit detection:

If...	Then...
you have short-circuit at 24 V on group 1, 2, 3, or 4	the impacted group automatically goes into over-current protection mode (all outputs set to 0) and the group is re-armed every 1 second to test the connection state. For more information, refer to regular outputs wiring diagram, page 127
you have short-circuit at 0 V on group 1, 2, 3, or 4	no action is taken; however, no damage to the equipment is possible

NOTE: For all logic controller references, the system word %SW139 provides the short-circuit diagnostic for the outputs.

Short-Circuit or Over-Current on Outputs for TM200C•••T

For TM200C•••T, in the case of short-circuit or over-current in outputs, the following **transistor source outputs** are considered:

- Q0...Q6 for TM200C•16T

  For TM200C•16T, in the case of short-circuit or over-current in outputs, there are different considerations for the following groups of outputs:

  - Group 1 (Q0...Q3): Four transistor source outputs
  - Group 2 (Q4...Q6): Three transistor source outputs

The following table describes the actions taken on short-circuit detection:

If...	Then...
you have short-circuit at 0 V on group 1 or 2	the impacted group automatically goes into over-current protection mode (all outputs to 0) and then the group is re-armed every 1 second to test the connection state. For more information, refer to regular outputs wiring diagram, page 127.
you have short-circuit at 24 V on group 1 or 2	no action is taken; however, no damage to the equipment is possible.

For TM200C•24T, in the case of short-circuit or over-current in outputs, there are different considerations for the following groups of outputs:

- Group 1 (Q0...Q3): Four transistor source outputs
- Group 2 (Q4...Q7): Four transistor source outputs
- Group 3 (Q8...Q9): Two transistor source outputs

The following table describes the actions taken on short-circuit detection:

If...	Then...
you have short-circuit at 0 V on group 1, 2, or 3	the impacted group automatically goes into over-current protection mode (all outputs to 0) and then the group is re-armed every 1 second to test the connection state. For more information, refer to regular outputs wiring diagram, page 128.
you have short-circuit at 24 V on group 1, 2, or 3	no action is taken; however, no damage to the equipment is possible.

- Q0...Q11 for TM200C•32T

  For TM200C•32T, in the case of short-circuit or over-current in outputs, there are different considerations for the following groups of outputs:

  - Group 1 (Q0...Q3): Four transistor sink outputs
  - Group 2 (Q4...Q7): Four transistor sink outputs
  - Group 3 (Q8...Q11): Four transistor sink outputs

The following table describes the actions taken on short-circuit detection:

If...	Then...
you have short-circuit at 0 V on group 1, 2, or 3	the impacted group automatically goes into over-current protection mode (all outputs to 0) and then the group is re-armed every 1 second to test the connection state. For more information, refer to regular outputs wiring diagram, page 128.
you have short-circuit at 24 V on group 1, 2, or 3	no action is taken; however, no damage to the equipment is possible.

For TM200C•40T, in the case of short-circuit or over-current in outputs, there are different considerations for the following groups of outputs:

- Group 1 (Q0...Q3): Four transistor source outputs
- Group 2 (Q4...Q7): Four transistor source outputs
- Group 3 (Q8...Q11): Four transistor source outputs
- Group 4 (Q12...Q15): Four transistor source outputs

The following table describes the actions taken on short-circuit detection:

If...	Then...
you have short-circuit at 0 V on group 1, 2, 3, or 4	the impacted group automatically goes into over-current protection mode (all outputs to 0) and then the group is re-armed every 1 second to test the connection state. For more information, refer to regular outputs wiring diagram, page 128.
you have short-circuit at 24 V on group 1, 2, 3, or 4	no action is taken; however, no damage to the equipment is possible.

NOTE: For all logic controller references, the system word %SW139 provides the short-circuit diagnostic for the outputs.

⚠ WARNING

UNINTENDED MACHINE START-UP

Inhibit the automatic rearming of outputs if this feature is an undesirable behavior for your machine or process.

Failure to follow these instructions can result in death, serious injury, or equipment damage.

Run/Stop

Run/Stop

The M100/M200 Logic Controller can be operated externally by the following:

- a hardware Run/Stop switch
- a Run/Stop, page 66 operation by a dedicated digital input, defined in the software configuration

- an EcoStruxure Machine Expert-Basic software command.

For more information, refer to Configuring Digital Inputs (see Modicon M100/M200 Logic Controller, Programming Guide).

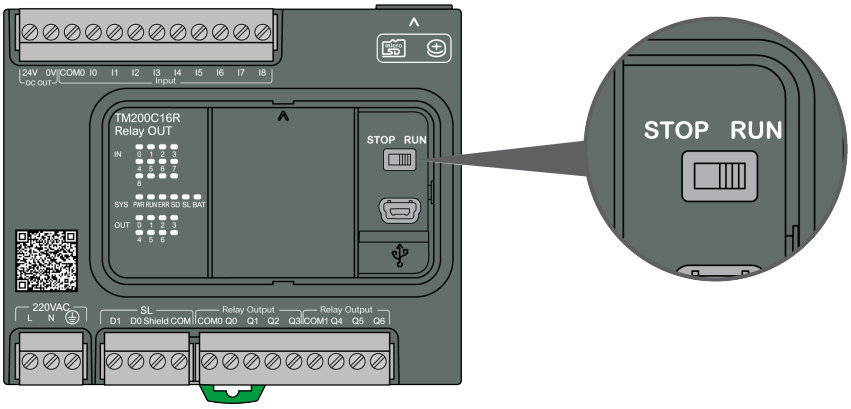

The interaction of the 2 external operators on the controller state behavior is summarized in the table below:

		Embedded Run/Stop hardware switch		
		Switch on Stop	**Stop to Run transition**	**Switch on Run**
Software configurable Run/Stop digital input	**None**	STOP Ignores external Run/Stop commands.	Commands a transition to RUN state[1].	Allows external Run/Stop commands.
	State 0	STOP Ignores external Run/Stop commands.	STOP Ignores external Run/Stop commands.	STOP Ignores external Run/Stop commands.
	Rising edge	STOP Ignores external Run/Stop commands.	Commands a transition to RUN state[1].	Commands a transition to RUN state.
	State 1	STOP Ignores external Run/Stop commands.	Commands a transition to RUN state[1].	Allows external Run/Stop commands.

[1] For more information, refer to the Controller States and Behaviors (see Modicon M100/M200 Logic Controller, Programming Guide).

⚠WARNING

UNINTENDED MACHINE OR PROCESS START-UP

- Verify the state of security of your machine or process environment before applying power to the Run/Stop input or engaging the Run/Stop switch.
- Use the Run/Stop input to help prevent the unintentional start-up from a remote location, or from accidentally engaging the Run/Stop switch.

Failure to follow these instructions can result in death, serious injury, or equipment damage.

Micro SD Card

Overview

Access to the micro SD card is only possible when the M100/M200 Logic Controller is in the STOP state. This means:

- If an SD card is inserted when the controller is in the RUN state, no operation is performed and the **SD** LED is not On or flashing.

- If the logic controller is stopped while an SD card is inserted, SD card access starts automatically.
- If an SD card operation is in progress when the logic controller starts, the logic controller does not run until the operation is complete.
- If using a post configuration file (`Machine.cfg`), the parameter `SL1.HW` must be set to **1** to use post configuration for serial line 1, as the embedded serial line 1 only supports RS485. All other values are invalid and could cause post configuration to not be applied.

When handling the micro SD card, follow the instructions below to help prevent internal data on the micro SD card from being corrupted or lost or a micro SD card malfunction from occurring:

NOTICE

LOSS OF APPLICATION DATA

- Do not store the micro SD card where there is static electricity or probable electromagnetic fields.
- Do not store the micro SD card in direct sunlight, near a heater, or other locations where high temperatures can occur.
- Do not bend the micro SD card.
- Do not drop or strike the micro SD card against another object.
- Keep the micro SD card dry.
- Do not touch the micro SD card connectors.
- Do not disassemble or modify the micro SD card.
- Use only micro SD card formatted using FAT or FAT32.

Failure to follow these instructions can result in equipment damage.

The M100/M200 Logic Controller does not recognize NTFS formatted micro SD cards. Format the micro SD card on your computer using FAT or FAT32.

When using the M100/M200 Logic Controller and a micro SD card, observe the following to avoid losing valuable data:

- Accidental data loss can occur at any time. Once data is lost it cannot be recovered.
- If you forcibly extract the micro SD card, data on the micro SD card may become corrupted.
- Removing a micro SD card that is being accessed could damage the micro SD card, or corrupt its data.
- If the micro SD card is not positioned correctly when inserted into the controller, the data on the card and the controller could become damaged.

NOTICE

LOSS OF APPLICATION DATA

- Backup micro SD card data regularly.
- Do not remove power or reset the controller, and do not insert or remove the micro SD card while it is being accessed.
- Become familiar with the proper orientation of the micro SD card when inserting it into the controller.

Failure to follow these instructions can result in equipment damage.

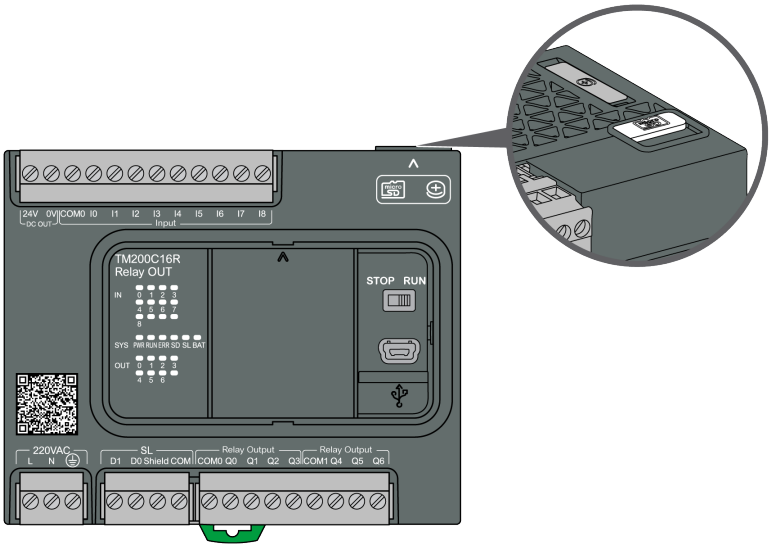

To install or replace the micro SD card, follow these steps:

Step	Action
1	Slide the cover to show the micro SD card slot. 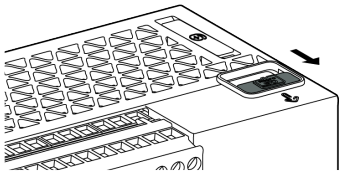
2	Insert the micro SD card into the micro SD card slot. 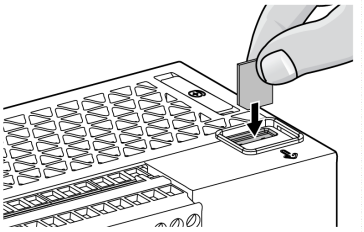
3	Press the micro SD card until it clicks. 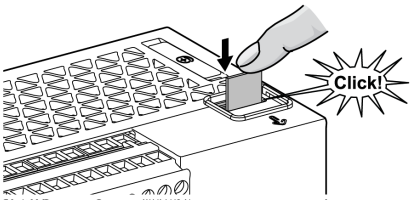
4	Slide the cover back to the original position. 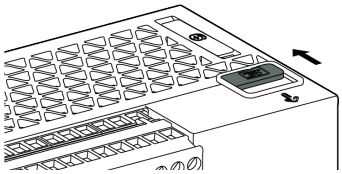

Micro SD Card Slot Characteristics

Topic	Characteristics	Description
Supported type	Standard Capacity	Micro SD
	High Capacity	Micro SDHC
Global memory	Size	Maximum 32 GB
Speed	Classes	4...10
Memory organization	Application backup size	64 MB
	Data storage size	1.93 GB
Robustness	Temperature operating range	–25...+85 °C (–13...+185 °F)
	Write/erase cycles (typical)	See the characteristics provided by your Micro SD card provider for the value.
	File retention time	

Micro SD Card Characteristics

For commercially available cards, please consult your local sales representative.

M200 Logic Controller Real Time Clock (RTC)

Overview

Before using the RTC function, verify that your logic controller is equipped with a battery (TMARBAT1).

NOTE: The battery is not delivered with the M200 Logic Controller (see the *Delivery Content*, page 15). You must order the battery separately and then follow the procedure of *Installing the Battery*, page 80 to install the battery in the controller before using the RTC function.

The M200 Logic Controller includes an RTC to provide system date and time information, and to support related functions requiring a real-time clock.

This table shows how RTC drift is managed:

RTC characteristics	Description
RTC drift	Less than 90 seconds per month at 25 °C (77 °F)

Battery

In the event of a power interruption, a backup battery maintains the RTC for the controller. A battery LED on the front panel of the controller indicates if the battery is depleted or absent.

Characteristics	Description
Use	In the event of a transient power outage, the battery powers the RTC.
Backup life	At least 3 years at 25 °C maximum (77 °F). At higher temperatures, the time is reduced.
Battery monitoring	Yes
Replaceable	Yes

Characteristics	Description
Battery life	5 years at 25 °C maximum (77 °F). At higher temperatures, the time is reduced.
Controller battery type	Lithium carbon monofluoride, type Panasonic BR2032

Installing and Replacing the Battery

While lithium batteries are preferred due to their slow discharge and long life, they can present hazards to personnel, equipment and the environment and must be handled properly.

⚠ DANGER

EXPLOSION, FIRE, OR CHEMICAL BURNS

- Replace with identical battery type.
- Follow all the instructions of the battery manufacturer.
- Remove all replaceable batteries before discarding unit.
- Recycle or properly dispose of used batteries.
- Protect battery from any potential short-circuit.
- Do not recharge, disassemble, heat above 85 °C (185 °F), or incinerate.
- Use your hands or insulated tools to remove or replace the battery.
- Maintain proper polarity when inserting and connecting a new battery.

Failure to follow these instructions will result in death or serious injury.

To install or replace the battery, follow these steps:

Step	Action
1	Remove power from the controller.
2	Use an insulated screwdriver to pull out the battery holder from the M200 Logic Controller. 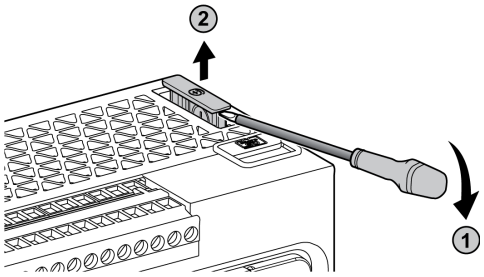
3	Take the battery out of the package.
4	Place the battery on the battery tray with the positive symbol facing upwards.

Step	Action
	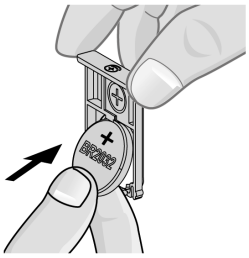
5	Press the battery towards the battery tray until it is securely in place. 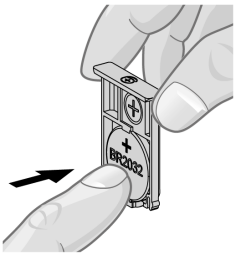
6	Insert the battery tray back into the battery holder. 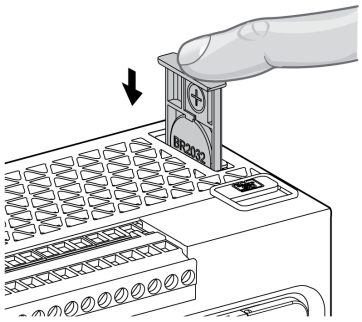
7	Power up the M200 Logic Controller.
8	Set the internal clock. For further details on the internal clock, refer to M100/M200 Logic Controller Programming Guide.

NOTE: Replacement of the battery in the controllers other than with the type specified in this documentation may present a risk of fire or explosion.

⚠ WARNING

IMPROPER BATTERY CAN PROVOKE FIRE OR EXPLOSION

Replace battery only with identical Schneider Electric reference TMARBAT1 battery.

Failure to follow these instructions can result in death, serious injury, or equipment damage.

Status LEDs

Description

The number of status LEDs depends on the controller reference. The following figure shows the status LEDs:

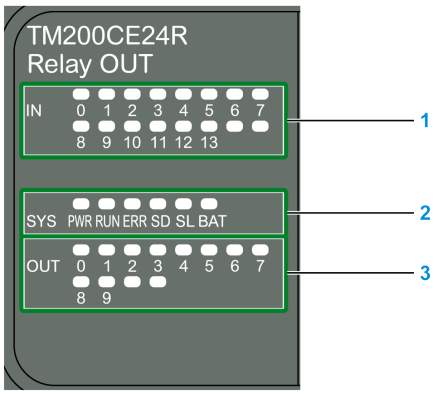

1 IN: Input status LEDs

2 SYS: System status LEDs

3 OUT: Output status LEDs

The **IN** and/or **OUT** status LEDs are ON (Green color) if the inputs and/or outputs are active/high that is when the digital inputs/outputs are set to 1.

The following table describes the system status LEDs:

Label	Function Type	Color	Status	Description		
				Controller States	**Programming Port Communication**	**Application Execution**
PWR	Power	Green	On	Indicates that power is applied.		
			Off	Indicates that power is removed.		
RUN	Machine Status	Green	On	Indicates that the controller is running a valid application.		
			Flashing	Indicates that the controller has a valid application that is stopped.		
			Off	Indicates that the controller is not programmed		
ERR	Error	Red	On*	EXCEPTION	Restricted	NO
			Flashing (with RUN status LED Off)	INTERNAL ERROR	Restricted	NO
			Slow flash	Minor error detected	Yes	Depends on the RUN status LED
			1 single flash	No application	Yes	Yes
SD	Micro SD Card Access, page 76	Green	On	Indicates that the SD card is being accessed		
			Flashing	Indicates that an error was detected during the SD card operation.		
			Off	Indicates no access (idle) or no card is present.		
BAT	Battery (only for M200), page 79	Red	On	Indicates that the battery needs to be replaced.		
			Flashing	Indicates that the battery charge is low.		
			Off	Indicates that the battery is OK.		

Label	Function Type	Color	Status	Description		
				Controller States	Programming Port Communication	Application Execution
SL	Serial line 1, page 132	Green	On	Indicates the status of Serial line 1		
			Flashing	Indicates activity on Serial line 1		
			Off	Indicates no serial communication		

* ERR LED is also On during booting process

NOTE: For information about the LEDs integrated into the Ethernet connector, refer to Ethernet Status LEDs, page 130

Modicon M100/M200 Logic Controller Installation and Wiring

What's in This Chapter

M100/M200 Logic Controller Electrical Requirements 84
M100/M200 Logic Controller Wiring 110
TMCR2••• Cartridges Wiring 133
TM3R Expansion Modules Wiring 138

M100/M200 Logic Controller Electrical Requirements

Installation and Maintenance Requirements

Before Starting

Read and understand this chapter before beginning the installation of your system.

The use and application of the information contained herein require expertise in the design and programming of automated control systems. Only you, the user, machine builder or integrator, can be aware of all the conditions and factors present during installation and setup, operation, and maintenance of the machine or process, and can therefore determine the automation and associated equipment and the related safeties and interlocks which can be effectively and properly used. When selecting automation and control equipment, and any other related equipment or software, for a particular application, you must also consider any applicable local, regional or national standards and/or regulations.

Pay particular attention in conforming to any safety information, different electrical requirements, and normative standards that would apply to your machine or process in the use of this equipment.

Disconnecting Power

All options and modules should be assembled and installed before installing the control system on a mounting rail, onto a mounting plate or in a panel. Remove the control system from its mounting rail, mounting plate or panel before disassembling the equipment.

⚠⚠ DANGER

HAZARD OF ELECTRIC SHOCK, EXPLOSION OR ARC FLASH

- Disconnect all power from all equipment including connected devices prior to removing any covers or doors, or installing or removing any accessories, hardware, cables, or wires except under the specific conditions specified in the appropriate hardware guide for this equipment.
- Always use a properly rated voltage sensing device to confirm the power is off where and when indicated.
- Replace and secure all covers, accessories, hardware, cables, and wires and confirm that a proper ground connection exists before applying power to the unit.
- Use only the specified voltage when operating this equipment and any associated products.

Failure to follow these instructions will result in death or serious injury.

Programming Considerations

⚠ WARNING

UNINTENDED EQUIPMENT OPERATION

- Only use software approved by Schneider Electric for use with this equipment.
- Update your application program every time you change the physical hardware configuration.

Failure to follow these instructions can result in death, serious injury, or equipment damage.

Operating Environment

⚠ DANGER

POTENTIAL FOR EXPLOSION

- Only use this equipment in non-hazardous locations.
- Do not substitute components which would impair compliance to Class I, Division 2.
- Do not connect or disconnect equipment unless power has been removed or the location is known to be non-hazardous.
- Do not use the USB port(s), if so equipped, unless the location is known to be non-hazardous.

Failure to follow these instructions will result in death or serious injury.

⚠ WARNING

UNINTENDED EQUIPMENT OPERATION

Install and operate this equipment according to the conditions described in the Environmental Characteristics.

Failure to follow these instructions can result in death, serious injury, or equipment damage.

Installation Considerations

⚠ WARNING

UNINTENDED EQUIPMENT OPERATION

- Use appropriate safety interlocks where personnel and/or equipment hazards exist.
- Install and operate this equipment in an enclosure appropriately rated for its intended environment and secured by a keyed or tooled locking mechanism.
- Use the sensor and actuator power supplies only for supplying power to the sensors or actuators connected to the module.
- Power line and output circuits must be wired and fused in compliance with local and national regulatory requirements for the rated current and voltage of the particular equipment.
- Do not use this equipment in safety-critical machine functions unless the equipment is otherwise designated as functional safety equipment and conforming to applicable regulations and standards.
- Do not disassemble, repair, or modify this equipment.
- Do not connect any wiring to reserved, unused connections, or to connections designated as No Connection (N.C.).

Failure to follow these instructions can result in death, serious injury, or equipment damage.

NOTE: JDYX2 or JDYX8 fuse types are UL-recognized and CSA approved.

Mounting Positions and Clearances

Introduction

This section describes the mounting positions for the M100/M200 Logic Controller .

NOTE: Keep adequate spacing for proper ventilation and to maintain the operating temperature specified in the Environmental Characteristics, page 63.

Correct Mounting Position

Whenever possible, the M100/M200 Logic Controller should be mounted horizontally on a vertical plane as shown in the figure below:

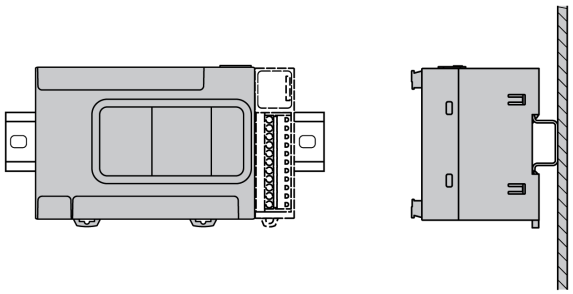

Incorrect Mounting Position

The M100/M200 Logic Controller should only be positioned as shown in the figure, Correct Mounting Position, page 86. The figures below show the incorrect mounting positions.

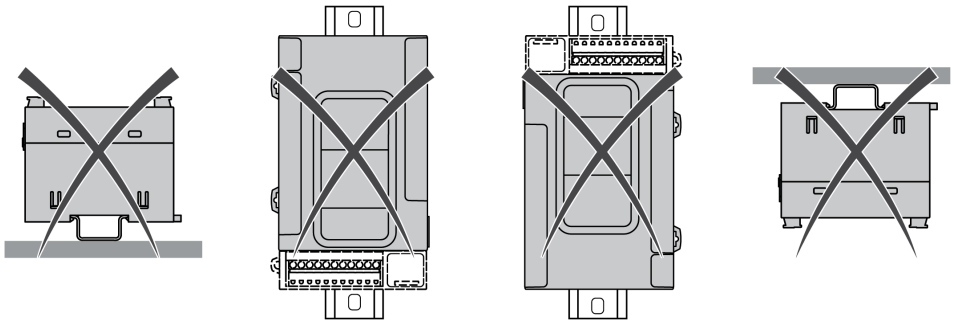

Minimum Clearances

⚠ WARNING

UNINTENDED EQUIPMENT OPERATION

- Place devices dissipating the most heat at the top of the cabinet and ensure adequate ventilation.
- Avoid placing this equipment next to or above devices that might cause overheating.
- Install the equipment in a location providing the minimum clearances from all adjacent structures and equipment as directed in this document.
- Install all equipment in accordance with the specifications in the related documentation.

Failure to follow these instructions can result in death, serious injury, or equipment damage.

The M100/M200 Logic Controller has been designed as an IP20 product and must be installed in an enclosure. Clearances must be respected when installing the product.

There are 3 types of clearances between:

- The M100/M200 Logic Controller and all sides of the cabinet (including the panel door).
- The M100/M200 Logic Controller terminal blocks and the wiring ducts. This distance reduces electromagnetic interference between the controller and the wiring ducts.
- The M100/M200 Logic Controller and other heat generating devices installed in the same cabinet.

The following figure shows the minimum clearances that apply to all M100/M200 Logic Controller references:

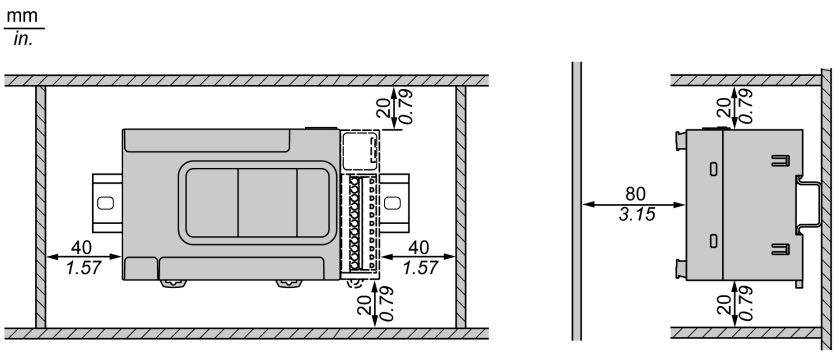

Top Hat Section Rail (DIN rail)

Dimensions of Top Hat Section Rail DIN Rail

You can mount the controller or receiver and its expansions on a 35 mm (1.38 in.) top hat section rail (DIN rail). It can be attached to a smooth mounting surface or suspended from a EIA rack or mounted in a NEMA cabinet.

Symmetric Top Hat Section Rails (DIN Rail)

The following illustration and table show the references of the top hat section rails (DIN rail) for the wall-mounting range:

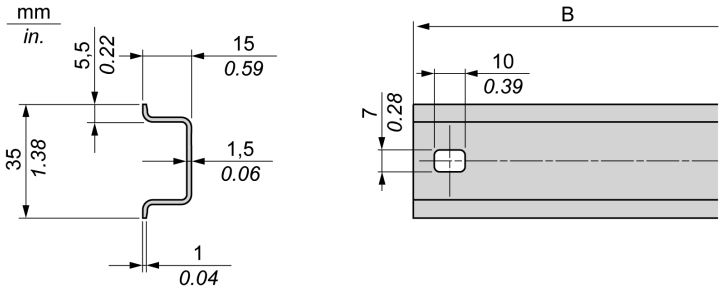

Reference	Type	Rail Length (B)
NSYSDR50A	A	450 mm (17.71 in.)
NSYSDR60A	A	550 mm (21.65 in.)
NSYSDR80A	A	750 mm (29.52 in.)
NSYSDR100A	A	950 mm (37.40 in.)

The following illustration and table show the references of the symmetric top hat section rails (DIN rail) for the metal enclosure range:

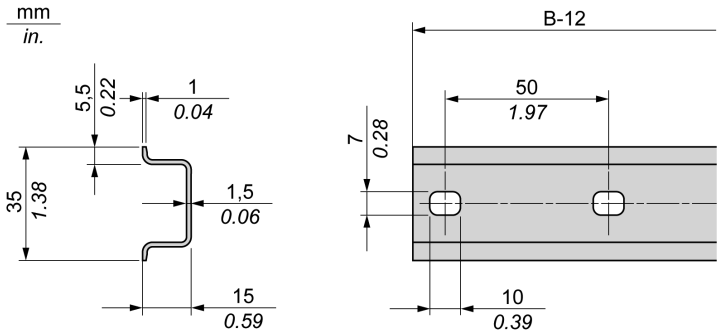

Reference	Type	Rail Length (B-12 mm)
NSYSDR60	A	588 mm (23.15 in.)
NSYSDR80	A	788 mm (31.02 in.)
NSYSDR100	A	988 mm (38.89 in.)
NSYSDR120	A	1188 mm (46.77 in.)

The following illustration and table shows the references of the symmetric top hat section rails (DIN rail) of 2000 mm (78.74 in.):

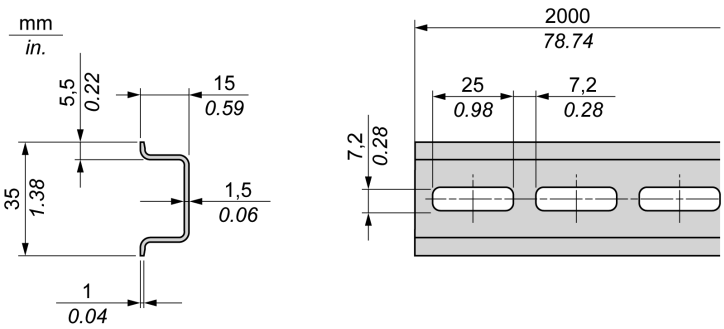

Reference	Type	Rail Length
NSYSDR200[1]	A	2000 mm (78.74 in.)
NSYSDR200D[2]	A	
1 Unperforated galvanized steel **2** Perforated galvanized steel		

Double-Profile Top Hat Section Rails (DIN rail)

The following illustration and table show the references of the double-profile top hat section rails (DIN rails) for the wall-mounting range:

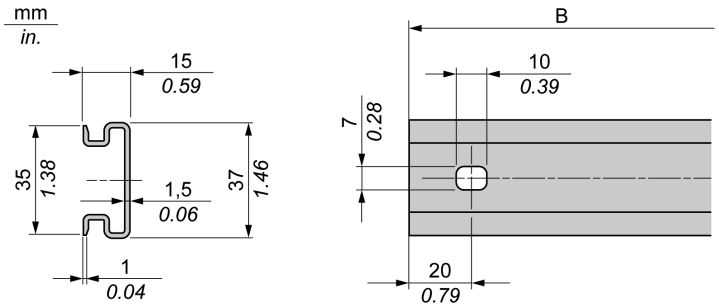

Reference	Type	Rail Length (B)
NSYDPR25	W	250 mm (9.84 in.)
NSYDPR35	W	350 mm (13.77 in.)
NSYDPR45	W	450 mm (17.71 in.)
NSYDPR55	W	550 mm (21.65 in.)
NSYDPR65	W	650 mm (25.60 in.)
NSYDPR75	W	750 mm (29.52 in.)

The following illustration and table show the references of the double-profile top hat section rails (DIN rail) for the floor-standing range:

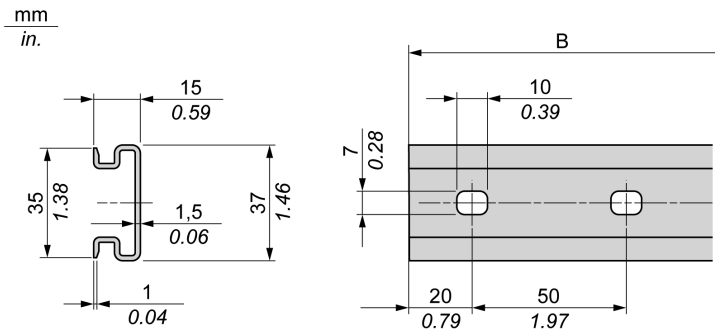

Reference	Type	Rail Length (B)
NSYDPR60	F	588 mm (23.15 in.)
NSYDPR80	F	788 mm (31.02 in.)
NSYDPR100	F	988 mm (38.89 in.)
NSYDPR120	F	1188 mm (46.77 in.)

Installing and Removing the Controller with Expansions

Overview

This section describes how to install and remove the controller with its expansion modules from a top hat section rail (DIN rail).

To assemble expansion modules to a controller or receiver module, or to other modules, refer to the respective expansion modules hardware guide(s).

Installing a Controller with its Expansions on a DIN Rail

To install a controller with its expansion modules on a top hat section rail (DIN rail), follow these steps:

Step	Action
1	Fasten the top hat section rail (DIN rail) to a panel surface using screws.
2	Position the top groove of the controller and its expansion modules on the top edge of the DIN rail and press the assembly against the top hat section rail (DIN rail) until you hear the top hat section rail (DIN rail) clip snap into place. On M100/M200 Logic Controller: 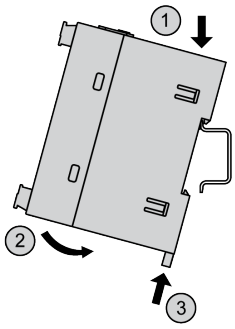
3	Place 2 terminal block end clamps on both sides of the controller and expansion module assembly. **NOTE:** Type NSYTRAAB35 or equivalent terminal block end clamps help minimize sideways movement and improve the shock and vibration characteristics of the controller and expansion module assembly.

Removing a Controller with its Expansions from a Top Hat Section Rail (DIN Rail)

To remove a controller with its expansion modules from a top hat section rail (DIN rail), follow these steps:

Step	Action
1	Remove all power from the controller and expansion modules.
2	Insert a flat screwdriver into the slot of the top hat section rail (DIN rail) clip. On M100/M200 Logic Controller: 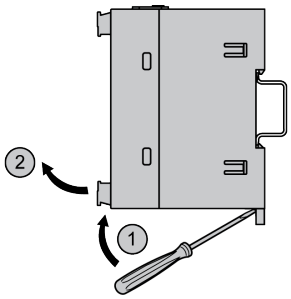
3	Pull down the DIN rail clip.
4	Pull the controller and its expansion modules from the top hat section rail (DIN rail) from the bottom.

Direct Mounting on a Panel Surface

Overview

This section shows how to mount the M100/M200 Logic Controller on a panel surface and provides layout of the mounting hole for all modules.

Mounting Hole Layout

The following diagram shows the mounting hole layout for M100/M200 Logic Controller with 16 I/O channels:

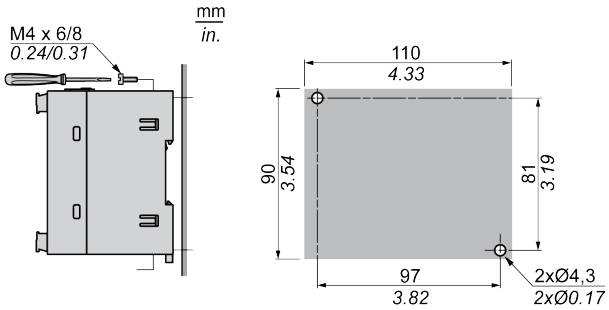

The following diagram shows the mounting hole layout for M100/M200 Logic Controller with 24 I/O channels:

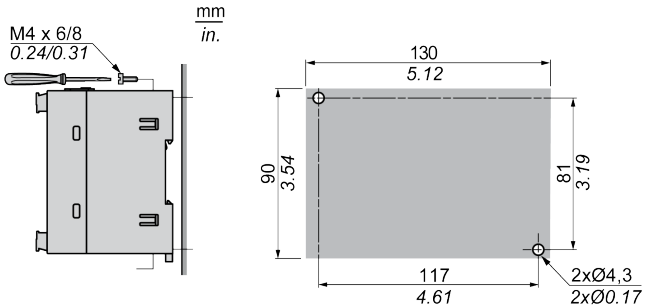

The following diagram shows the mounting hole layout for M100/M200 Logic Controller with 32 and 40 I/O channels:

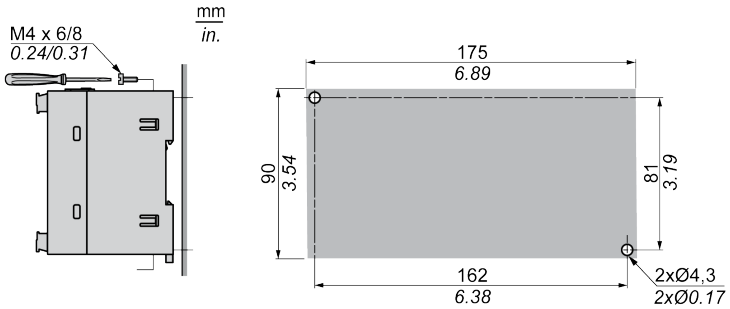

The following diagram shows the mounting hole layout for M100/M200 Logic Controller with 60 I/O channels:

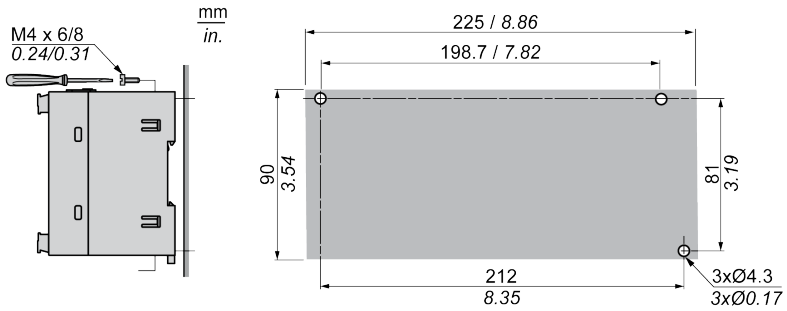

TMCR2••• Installation

Installation Considerations

The TMCR2••• cartridge is designed to operate within the same temperature range as the controllers, including the controller derating for extended temperature operation, and temperature restrictions associated with the mounting positions. Refer to the controller mounting position and clearance, page 86 for more information.

Installation

⚠⚠DANGER

ELECTRIC SHOCK OR ARC FLASH

- Disconnect all power from all equipment including connected devices prior to removing any covers or doors, or installing or removing any accessories, hardware, cables, or wires.
- Always use a properly rated voltage sensing device to confirm the power is off where and when indicated.
- Use protective gloves when installing or removing the cartridges.
- Replace and secure all covers, accessories, hardware, cables, and wires and confirm that a proper ground connection exists before applying power to the unit.
- Use only the specified voltage when operating this equipment and any associated products.

Failure to follow these instructions will result in death or serious injury.

NOTICE

ELECTROSTATIC DISCHARGE

- Verify that empty cartridge slots have their covers in place before applying power to the controller.
- Do not touch the contacts of the cartridge.
- Only handle the cartridge on the housing.
- Take the necessary protective measures against electrostatic discharges.

Failure to follow these instructions can result in equipment damage.

To install a TMCR2••• cartridge on the controller, follow these steps:

Step	Action
1	Disconnect all power from all equipment prior to removing any covers or installing a cartridge.
2	Remove the cartridge from the packaging.
3	Press the locking clip on the top of the cartridge cover with an insulated screwdriver and pull up the cover gently. 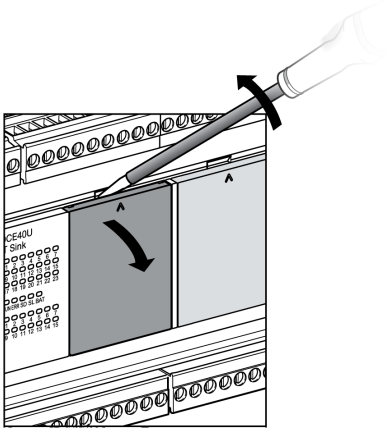
4	Remove by hand the cartridge slot cover from the controller. 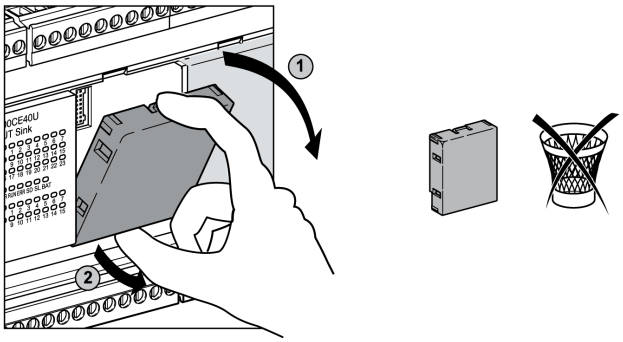 **NOTE:** Keep the cover to reuse it for the de-installation.
5	Place the cartridge in the slot on the controller. 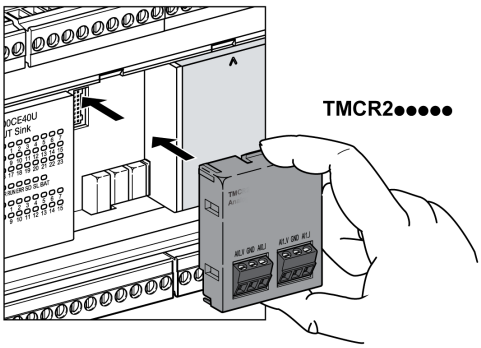
6	Push the cartridge into the slot until it clicks. 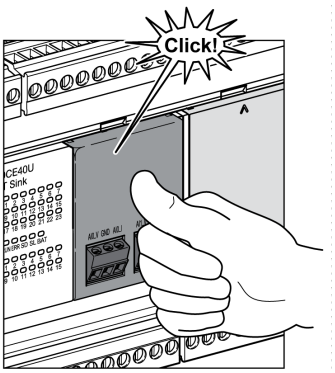

De-installation

⚠⚠DANGER

ELECTRIC SHOCK OR ARC FLASH

- Disconnect all power from all equipment including connected devices prior to removing any covers or doors, or installing or removing any accessories, hardware, cables, or wires.
- Always use a properly rated voltage sensing device to confirm the power is off where and when indicated.
- Use protective gloves when installing or removing the cartridges.
- Replace and secure all covers, accessories, hardware, cables, and wires and confirm that a proper ground connection exists before applying power to the unit.
- Use only the specified voltage when operating this equipment and any associated products.

Failure to follow these instructions will result in death or serious injury.

NOTICE

ELECTROSTATIC DISCHARGE

- Verify that empty cartridge slots have their covers in place before applying power to the controller.
- Do not touch the contacts of the cartridge.
- Only handle the cartridge on the housing.
- Take the necessary protective measures against electrostatic discharges.

Failure to follow these instructions can result in equipment damage.

To de-install a TMCR2••• cartridge from the controller, follow these steps:

Step	Action
1	Disconnect all power from all equipment, including connected devices, prior to removing a cartridge.
2	Press the locking clip on the top of the cartridge with an insulated screwdriver and pull up the cartridge gently. 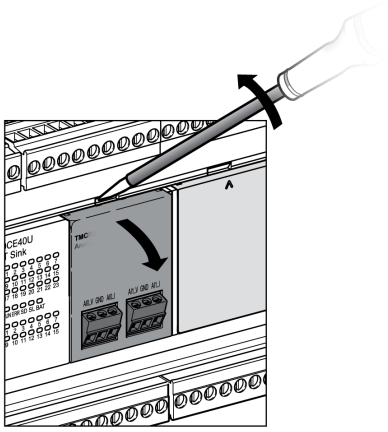
3	Remove by hand the cartridge from the controller.

Step	Action
	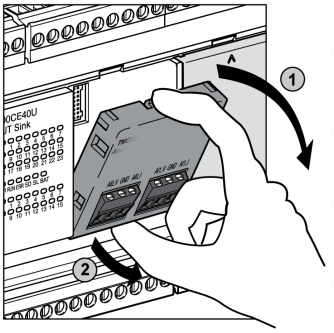
4	Place the cartridge slot cover in the slot on the controller. 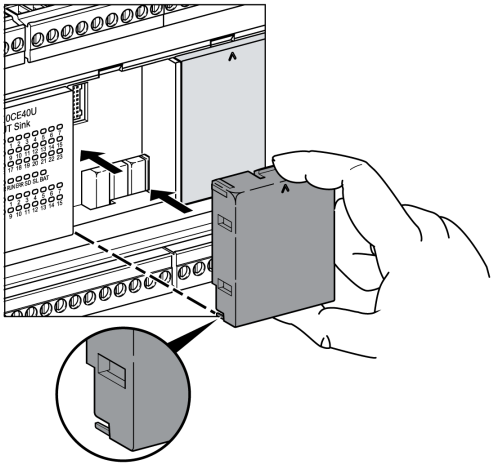
5	Push the cartridge slot cover into the slot until it clicks. 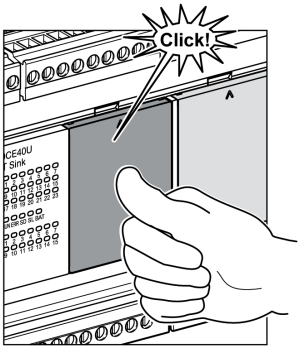

Assembling an Expansion Module to a Controller

Introduction

This section describes how to assemble an expansion module to a controller or other modules.

⚠⚠DANGER

HAZARD OF ELECTRIC SHOCK, EXPLOSION OR ARC FLASH

- Disconnect all power from all equipment including connected devices prior to removing any covers or doors, or installing or removing any accessories, hardware, cables, or wires except under the specific conditions specified in the appropriate hardware guide for this equipment.
- Always use a properly rated voltage sensing device to confirm the power is off where and when indicated.
- Replace and secure all covers, accessories, hardware, cables, and wires and confirm that a proper ground connection exists before applying power to the unit.
- Use only the specified voltage when operating this equipment and any associated products.

Failure to follow these instructions will result in death or serious injury.

After connecting new modules to the controller, update and redownload your application program before placing the system back in service. If you do not revise your application program to reflect the addition of new modules, I/O located on the expansion bus may no longer operate normally.

⚠WARNING

UNINTENDED EQUIPMENT OPERATION

- Only use software approved by Schneider Electric for use with this equipment.
- Update your application program every time you change the physical hardware configuration.

Failure to follow these instructions can result in death, serious injury, or equipment damage.

Assembling a Module to a Controller

To assemble a controller and a module together, follow these steps:

Step	Action
1	Remove all power and dismount any existing controller I/O assembly from its DIN mounting.
2	Remove the expansion connector sticker from the controller or the outermost installed expansion module.
3	Verify that the locking device on the new module is in the upper position.
4	Align the internal bus connector on the left side of the module with the internal bus connector on the right side of the controller or expansion module.
5	Press the new module towards the controller or expansion module until it is securely in place.
6	Push down the locking device on the top of the new module to lock it to the controller or previously installed expansion module.

Disassembling an Expansion Module from a Controller

Introduction

This section describes how to disassemble an expansion module from a controller.

⚠⚠ DANGER

HAZARD OF ELECTRIC SHOCK, EXPLOSION OR ARC FLASH

- Disconnect all power from all equipment including connected devices prior to removing any covers or doors, or installing or removing any accessories, hardware, cables, or wires except under the specific conditions specified in the appropriate hardware guide for this equipment.
- Always use a properly rated voltage sensing device to confirm the power is off where and when indicated.
- Replace and secure all covers, accessories, hardware, cables, and wires and confirm that a proper ground connection exists before applying power to the unit.
- Use only the specified voltage when operating this equipment and any associated products.

Failure to follow these instructions will result in death or serious injury.

Disassembling a Module from a Controller

To disassemble a module from a controller, follow these steps:

Step	Action
1	Remove all power from the control system.
2	Dismount the assembled controller and modules from the mounting rail.
3	Push up the locking device from the bottom of the module to disengage it from the controller.
4	Pull apart module from the controller.

Wiring Best Practices

Overview

This section describes the wiring guidelines and associated best practices to be respected when using the M100/M200 Logic Controller system.

⚠⚠ DANGER

HAZARD OF ELECTRIC SHOCK, EXPLOSION OR ARC FLASH

- Disconnect all power from all equipment including connected devices prior to removing any covers or doors, or installing or removing any accessories, hardware, cables, or wires except under the specific conditions specified in the appropriate hardware guide for this equipment.
- Always use a properly rated voltage sensing device to confirm the power is off where and when indicated.
- Replace and secure all covers, accessories, hardware, cables, and wires and confirm that a proper ground connection exists before applying power to the unit.
- Use only the specified voltage when operating this equipment and any associated products.

Failure to follow these instructions will result in death or serious injury.

⚠ WARNING

LOSS OF CONTROL

- The designer of any control scheme must consider the potential failure modes of control paths and, for certain critical control functions, provide a means to achieve a safe state during and after a path failure. Examples of critical control functions are emergency stop and overtravel stop, power outage and restart.
- Separate or redundant control paths must be provided for critical control functions.
- System control paths may include communication links. Consideration must be given to the implications of unanticipated transmission delays or failures of the link.
- Observe all accident prevention regulations and local safety guidelines.[1]
- Each implementation of this equipment must be individually and thoroughly tested for proper operation before being placed into service.

Failure to follow these instructions can result in death, serious injury, or equipment damage.

[1] For additional information, refer to NEMA ICS 1.1 (latest edition), "Safety Guidelines for the Application, Installation, and Maintenance of Solid State Control" and to NEMA ICS 7.1 (latest edition), "Safety Standards for Construction and Guide for Selection, Installation and Operation of Adjustable-Speed Drive Systems" or their equivalent governing your particular location.

Wiring Guidelines

The following rules must be applied when wiring a M100/M200 Logic Controller system:

- I/O and communication wiring must be kept separate from the power wiring. Route these 2 types of wiring in separate cable ducting.
- Verify that the operating conditions and environment are within the specification values.
- Use proper wire sizes to meet voltage and current requirements.
- Use copper conductors (required).
- Use twisted pair, shielded cables for analog, and/or fast I/O.
- Use twisted pair, shielded cables for networks, and fieldbus.

Use shielded, properly grounded cables for all analog and high-speed inputs or outputs and communication connections. If you do not use shielded cable for these connections, electromagnetic interference can cause signal degradation. Degraded signals can cause the controller or attached modules and equipment to perform in an unintended manner.

⚠ WARNING

UNINTENDED EQUIPMENT OPERATION

- Use shielded cables for all fast I/O, analog I/O and communication signals.
- Ground cable shields for all analog I/O, fast I/O and communication signals at a single point[1].
- Route communication and I/O cables separately from power cables.

Failure to follow these instructions can result in death, serious injury, or equipment damage.

[1]Multipoint grounding is permissible if connections are made to an equipotential ground plane dimensioned to help avoid cable shield damage in the event of power system short-circuit currents.

For more details, refer to the topic *Grounding the M100/M200 System* , page 102.

NOTE: Surface temperatures may exceed 60 °C (140 °F). To conform to IEC 61010 standards, route primary wiring (wires connected to power mains) separately and apart from secondary wiring (extra low voltage wiring coming from intervening power sources). If that is not possible, double insulation is required such as conduit or cable gains.

Rules for Screw Terminal Block

The following tables show the cable types and wire sizes for a **3.81 pitch** removable screw terminal block (I/Os and power supply):

mm / in. 9 / 0.35								
mm²	0.14…1.5	0.14…1.5	0.25…1.5	0.25…0.5	2 x 0.14…0.5	2 x 0.14…0.75	2 x 0.25…0.34	2 x 0.5
AWG	*25…16*	*25…16*	*23...16*	*23...20*	*2 x 25…20*	*2 x 25…19*	*2 x 24…22*	*2 x 20*

Ø 2,5 mm (*0.1 in.*)	C	N•m	0.22...0.25
		lb-in	*1.95...2.21*

The following tables show the cable types and wire sizes for a **5.08 pitch** screw terminal block (I/Os and power supply):

mm / in. 7 / 0.28								
mm²	0.2…2.5	0.2…2.5	0.25…2.5	0.25…2.5	2 x 0.2…1	2 x 0.2…1.5	2 x 0.25…1	2 x 0.5...1.5
AWG	*24…14*	*24…14*	*23...14*	*23...14*	*2 x 24…18*	*2 x 24…16*	*2 x 22…18*	*2 x 20...16*

Ø 3,5 mm (*0.14 in.*)	C	N•m	0.5...0.6
		lb-in	*4.42...5.31*

The use of copper conductors is required.

⚠⚠DANGER

LOOSE WIRING CAUSES ELECTRIC SHOCK

- Tighten connections in conformance with the torque specifications.
- Do not insert more than one wire per connector of the terminal block unless using the cable ends (ferrules) specified above.

Failure to follow these instructions will result in death or serious injury.

⚠DANGER

FIRE HAZARD

- Use only the recommended wire sizes for the current capacity of the I/O channels and power supplies.
- For relay output (2 A) wiring, use conductors of at least 0.5 mm² (AWG 20) with a temperature rating of at least 80 °C (176 °F).
- For common conductors of relay output wiring (4 A), or relay output wiring greater than 2 A, use conductors of at least 1.0 mm² (AWG 16) with a temperature rating of at least 80 °C (176 °F).

Failure to follow these instructions will result in death or serious injury.

Removing the M200 I/O Terminal Block

The following figure shows the removal of the I/O terminal block from the M200 Logic Controller:

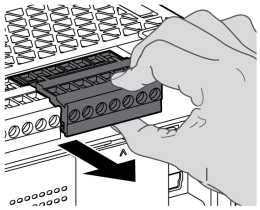

Protecting Outputs from Inductive Load Damage

Depending on the load, a protection circuit may be needed for the outputs on the controllers and certain modules. Inductive loads using DC voltages may create voltage reflections resulting in overshoot that will damage or shorten the life of output devices.

⚠ CAUTION

OUTPUT CIRCUIT DAMAGE DUE TO INDUCTIVE LOADS

Use an appropriate external protective circuit or device to reduce the risk of inductive direct current load damage.

Failure to follow these instructions can result in injury or equipment damage.

If your controller or module contains relay outputs, these types of outputs can support up to 240 Vac. Inductive damage to these types of outputs can result in welded contacts and loss of control. Each inductive load must include a protection device such as a peak limiter, RC circuit or flyback diode. Capacitive loads are not supported by these relays.

⚠ WARNING

RELAY OUTPUTS WELDED CLOSED

- Always protect relay outputs from inductive alternating current load damage using an appropriate external protective circuit or device.
- Do not connect relay outputs to capacitive loads.

Failure to follow these instructions can result in death, serious injury, or equipment damage.

AC-driven contactor coils are, under certain circumstances, inductive loads that generate pronounced high-frequency interference and electrical transients when the contactor coil is de-energized. This interference may cause the logic controller to detect an I/O bus error.

⚠ WARNING

CONSEQUENTIAL LOSS OF CONTROL

Install an RC surge suppressor or similar means, such as an interposing relay, on each TM3 expansion module relay output when connecting to AC-driven contactors or other forms of inductive loads.

Failure to follow these instructions can result in death, serious injury, or equipment damage.

Protective circuit A: this protection circuit can be used for both AC and DC load power circuits.

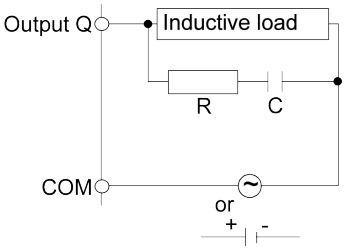

C Value from 0.1 to 1 µF

R Resistor of approximately the same resistance value as the load

Protective circuit B: this protection circuit can be used for DC load power circuits.

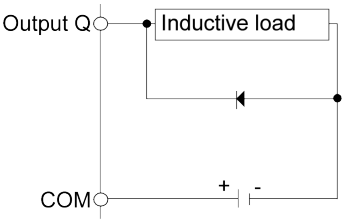

Use a diode with the following ratings:

- Reverse withstand voltage: power voltage of the load circuit x 10.
- Forward current: more than the load current.

Protective circuit C: this protection circuit can be used for both AC and DC load power circuits.

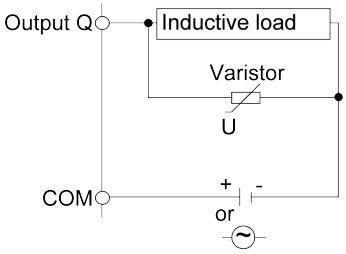

In applications where the inductive load is switched on and off frequently and/or rapidly, ensure that the continuous energy rating (J) of the varistor exceeds the peak load energy by 20 % or more.

Grounding the M100/M200 System

Overview

To help minimize the effects of electromagnetic interference, cables carrying the fast I/O, analog I/O, and field bus communication signals must be shielded.

⚠ WARNING

UNINTENDED EQUIPMENT OPERATION

- Use shielded cables for all fast I/O, analog I/O, and communication signals.
- Ground cable shields for all fast I/O, analog I/O, and communication signals at a single point[1].
- Route communications and I/O cables separately from power cables.

Failure to follow these instructions can result in death, serious injury, or equipment damage.

[1]Multipoint grounding is permissible if connections are made to an equipotential ground plane dimensioned to help avoid cable shield damage in the event of power system short-circuit currents.

The use of shielded cables requires compliance with the following wiring rules:

- For protective ground connections (PE), metal conduit or ducting can be used for part of the shielding length, provided there is no break in the continuity of the ground connections. For functional ground (FE), the shielding is intended to attenuate electromagnetic interference and the shielding must be continuous for the length of the cable. If the purpose is both functional and protective, as is often the case for communication cables, the cable must have continuous shielding.
- Wherever possible, keep cables carrying one type of signal separate from the cables carrying other types of signals or power.

Protective Ground (PE) on the Backplane

The protective ground (PE) is connected to the conductive backplane by a heavy-duty wire, usually a braided copper cable with the maximum allowable cable section.

Shielded Cables Connections

Cables carrying the fast I/O, analog I/O, and field bus communication signals must be shielded. The shielding must be securely connected to ground. The fast I/O and analog I/O shields may be connected either to the functional ground (FE) or to the protective ground (PE) of your M100/M200 Logic Controller. The field bus communication cable shields must be connected to the protective ground (PE) with a connecting clamp secured to the conductive backplane of your installation.

⚠ WARNING

ACCIDENTAL DISCONNECTION FROM PROTECTIVE GROUND (PE)

- Do not use the TM2XMTGB Grounding Bar to provide a protective ground (PE).
- Use the TM2XMTGB Grounding Bar only to provide a functional ground (FE).

Failure to follow these instructions can result in death, serious injury, or equipment damage.

The shielding of the Modbus cable must be connected to the protective ground (PE).

⚠⚠DANGER

ELECTRIC SHOCK

Make sure that Modbus cables are securely connected to the protective ground (PE).

Failure to follow these instructions will result in death or serious injury.

Protective Ground (PE) Cable Shielding

To ground the shield of a cable through a grounding clamp, follow these steps:

Step	Action
1	Strip the shielding for a length of 15 mm (0.59 in.) 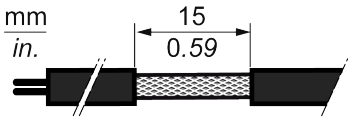
2	Attach the cable to the conductive backplane plate by attaching the grounding clamp to the stripped part of the shielding as close as possible to the M100/M200 Logic Controller system base. 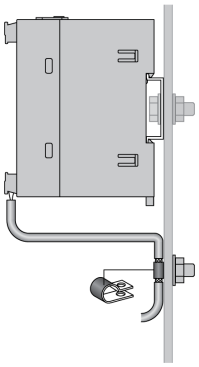

NOTE: The shielding must be clamped securely to the conductive backplane to ensure a good contact.

Functional Ground (FE) Cable Shielding

To connect the shield of a cable through the Grounding Bar, follow these steps:

Step	Action
1	Install the Grounding Bar directly on the conductive backplane below the M100/M200 Logic Controller system as illustrated. 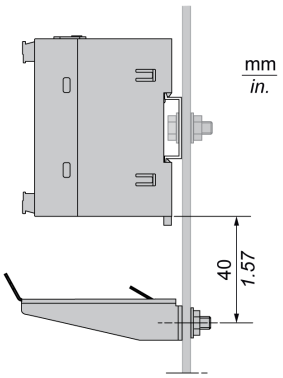
2	Strip the shielding for a length of 15 mm (0.59 in. 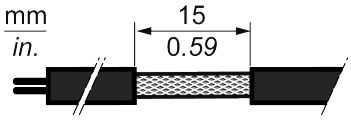
3	Tightly clamp on the blade connector **(1)** using nylon fastener **(2)**(width 2.5...3 mm (0.1...0.12 in.)) and appropriate tool. 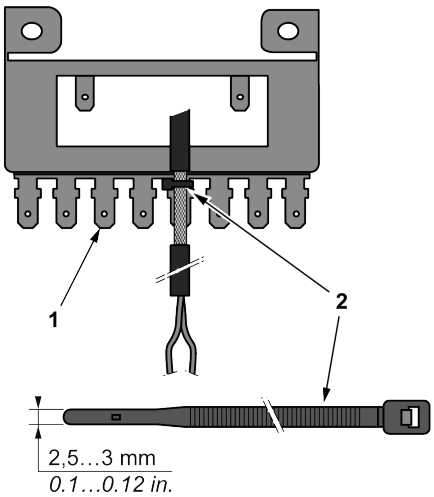

NOTE: Use the TM2XMTGB Grounding Bar exclusively for Functional Ground (FE) connections.

DC Power Supply Characteristics and Wiring

Overview

This section provides the characteristics and the wiring diagrams of the DC power supply.

DC Power Supply Voltage Range

If the specified voltage range is not maintained, outputs may not switch as expected. Use appropriate safety interlocks and voltage monitoring circuits.

⚠ DANGER

FIRE HAZARD

- Use only the correct wire sizes for the current capacity of the I/O channels and power supplies.
- For relay output (2 A) wiring, use conductors of at least 0.5 mm^2 (AWG 20) with a temperature rating of at least 80 °C (176 °F).
- For common conductors of relay output wiring (4 A), or relay output wiring greater than 2 A, use conductors of at least 1.0 mm^2 (AWG 16) with a temperature rating of at least 80 °C (176 °F).

Failure to follow these instructions will result in death or serious injury.

⚠ WARNING

UNINTENDED EQUIPMENT OPERATION

Do not exceed any of the rated values specified in the environmental and electrical characteristics tables.

Failure to follow these instructions can result in death, serious injury, or equipment damage.

DC Power Supply Requirements

The M200 Logic Controller and associated I/O (TM2, TM3, and embedded I/O) require power supplies with a nominal voltage of 24 Vdc. The 24 Vdc power supplies must be rated Safety Extra Low Voltage (SELV) or Protective Extra Low Voltage (PELV) according to IEC 61140. These power supplies are isolated between the electrical input and output circuits of the power supply.

⚠ WARNING

POTENTIAL OF OVERHEATING AND FIRE

- Do not connect the equipment directly to line voltage.
- Use only isolating PELV or SELV power supplies to supply power to the equipment[1].

Failure to follow these instructions can result in death, serious injury, or equipment damage.

[1]For compliance to UL (Underwriters Laboratories) requirements, the power supply must also be of a type Class 2 with a maximum power output availability of less than 100 VA (approximately 4 A at nominal voltage). A Class 2 circuit requires dry indoor use only in non-hazardous locations, and must be grounded. You must separate Class 2 circuits from other circuits. If a non-Class 2 power source is used, either power supply or transformer, you must impose a current limiting device such as a fuse or a circuit breaker with a maximum rating of 4 A, but never exceeding the limits indicated in the electric characteristics and wiring diagrams for this equipment. If the indicated rating of the electrical characteristics or wiring diagrams are greater than 4 A, multiple Class 2 power supplies may be used.

Controller DC Characteristics

The following table shows the DC power supply characteristics:

Characteristic	Value
Rated voltage	24 Vdc
Power supply voltage range	20.4...28.8 Vdc
Power interruption time	2 ms at 20.4 Vdc

Characteristic		Value
Maximum inrush current		max. 35 A at 25 °C (77 °F), 24 Vdc, first start-up, I*t<700 mA*s
Maximum power consumption	with 16 I/Os	15.5 W
	with 24 I/Os	16 W
	with 40 I/Os	18 W
Isolation	between DC power supply and internal logic	500 Vac / 800 Vdc
	between DC power supply and protective earth ground (PE)	500 Vdc

Power Interruption

When planning the management of the power supplied to the controller, you must consider the power interruption duration due to the fast cycle time of the controller.

There could potentially be many scans of the logic and consequential updates to the I/O image table during the power interruption, while there is no external power supplied to the inputs, the outputs or both depending on the power system architecture and power interruption circumstances.

⚠WARNING

UNINTENDED EQUIPMENT OPERATION

- Individually monitor each source of power used in the controller system including input power supplies, output power supplies and the power supply to the controller to allow appropriate system shutdown during power system interruptions.
- The inputs monitoring each of the power supply sources must be unfiltered inputs.

Failure to follow these instructions can result in death, serious injury, or equipment damage.

DC Power Supply Wiring Diagram

The following figure shows how to remove the power supply terminal block:

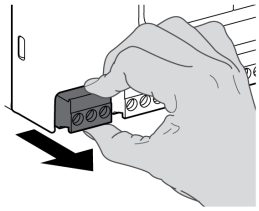

The following figure shows the wiring of the DC power supply:

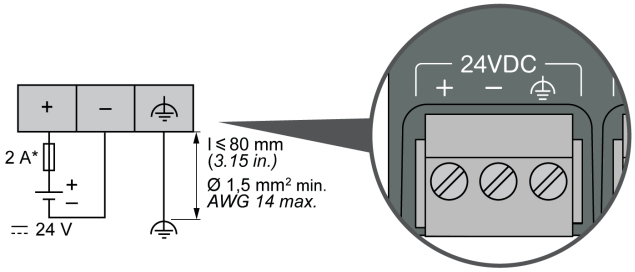

* Type T fuse

For more information, refer to the 5.08 pitch Rules for Screw Terminal block, page 100.

AC Power Supply Characteristics and Wiring

Overview

This section provides the wiring diagrams and the characteristics of the AC power supply.

AC Power Supply Voltage Range

If the specified voltage range is not maintained, outputs may not switch as expected. Use appropriate safety interlocks and voltage monitoring circuits.

⚠ DANGER

FIRE HAZARD

- Use only the correct wire sizes for the current capacity of the I/O channels and power supplies.
- For relay output (2 A) wiring, use conductors of at least 0.5 mm^2 (AWG 20) with a temperature rating of at least 80 °C (176 °F).
- For common conductors of relay output wiring (4 A), or relay output wiring greater than 2 A, use conductors of at least 1.0 mm^2 (AWG 16) with a temperature rating of at least 80 °C (176 °F).

Failure to follow these instructions will result in death or serious injury.

⚠ WARNING

UNINTENDED EQUIPMENT OPERATION

Do not exceed any of the rated values specified in the environmental and electrical characteristics tables.

Failure to follow these instructions can result in death, serious injury, or equipment damage.

Controller AC Characteristics

The following table shows the AC power supply characteristics:

Characteristic		Value
Voltage	rated	100...220 Vac
	limit (including ripple)	85...264 Vac
Frequency		50/60 Hz
Power interruption time		10 ms at 85 Vac
Maximum inrush current	at 240 Vac, 25 °C (77 °F), first start-up, I*t<400 mA*s	50 A
	at 120 Vac, 25 °C (77 °F), first start-up, I*t<160 mA*s	20 A
Maximum power consumption at 100...240 Vac	with 16 I/Os	TM100C••RN: 30...40 VA TM200C•••: 51...63 VA
	with 24 I/Os	TM100C••RN: 31...43 VA TM200C•••: 52...64 VA
	with 32 I/Os	TM100C••RN: 32...44 VA

Characteristic		Value
		TM200C•••: 55...66 VA
	with 40 I/Os	TM100C••RN: 33...45 VA TM200C•••: 59...69 VA
	with 60 I/Os	TM200C•••: 61...74 VA
Isolation	between AC power supply and internal logic	1780 Vac / 2500 Vdc
	between AC power supply and protective earth ground (PE)	1500 Vac / 2120 Vdc

Power Interruption

The duration of power interruptions where the M100/M200 Logic Controller is able to continue normal operation varies depending upon the load to the power supply of the controller, but generally a minimum of 10 ms is maintained as specified by IEC standards.

When planning the management of the power supplied to the controller, you must consider the duration due to the fast cycle time.

There could potentially be many scans of the logic and consequential updates to the I/O image table during the power interruption, while there is no external power supplied to the inputs, the outputs or both depending on the power system architecture and power interruption circumstances.

⚠ WARNING

UNINTENDED EQUIPMENT OPERATION

- Individually monitor each source of power used in the Modicon M100/M200 Logic Controller system including input power supplies, output power supplies and the power supply to the controller to allow appropriate system shutdown during power system interruptions.
- The inputs monitoring each of the power supply sources must be unfiltered inputs.

Failure to follow these instructions can result in death, serious injury, or equipment damage.

AC Power Supply Wiring Diagram

The following figure shows how to remove the power supply terminal block:

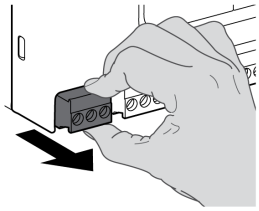

The following figure shows the wiring of the AC power supply:

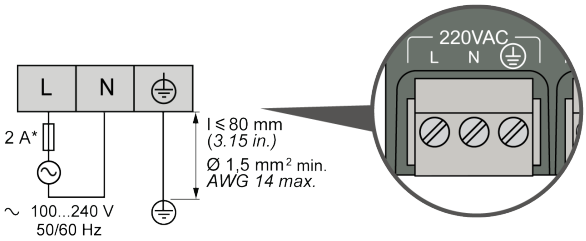

* Use an external, slow-blow, type T fuse.

24VDC Sensor Power Supply Characteristics and Wiring

Overview

This section provides the characteristics and the wiring diagrams of the 24VDC sensor power supply.

24VDC Sensor Power Supply Characteristics

TM200…R/TM100…RN 220VAC references provide isolated 24VDC sensor Power supply.

24VDC sensor power supply parameters	TM200•••16R TM200•••24R	TM200•••32R TM200•••40R TM200•••60R	TM100•••RN
Voltage Range (V)	21.6-26.4	21.6-26.4	21-28.8
Typical Load (A)	0.25	0.3	0.4

Wiring Diagram

Refer to Digital Inputs Wiring Diagrams, page 110 for the wiring.

M100/M200 Logic Controller Wiring

Digital Inputs Wiring Diagrams

Overview

For detailed information on the digital inputs, refer to *Digital Inputs Characteristics*, page 19 and *Input Management*, page 65.

⚠ DANGER

FIRE HAZARD

Use only the recommended wire sizes for the current capacity of the I/O channels and power supplies.

Failure to follow these instructions will result in death or serious injury.

⚠WARNING

UNINTENDED EQUIPMENT OPERATION

Do not exceed any of the rated values specified in the environmental and electrical characteristics tables.

Failure to follow these instructions can result in death, serious injury, or equipment damage.

TM100C16RN / TM200C16R Inputs Wiring Diagram - Positive Logic (Sink)

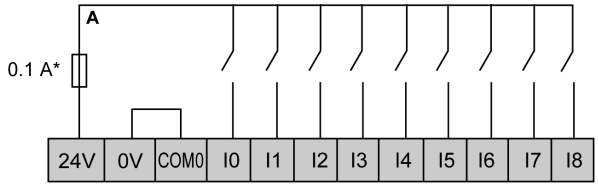

***** Type T fuse

A Sink wiring (positive logic)

The following figure shows the connection of the fast inputs:

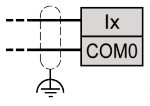

Ix where x=0...8

TM100C16RN / TM200C16R Inputs Wiring Diagram - Negative Logic (Source)

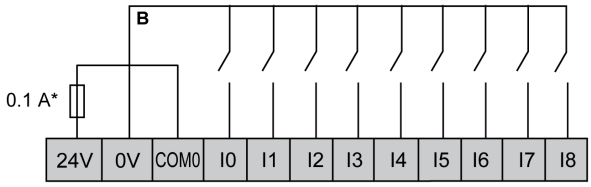

***** Type T fuse

B Source wiring (negative logic)

The following figure shows the connection of the fast inputs:

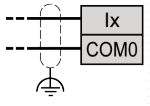

Ix where x=0...8

TM100C24RN / TM200C24R / TM200CE24R Inputs Wiring Diagram - Positive Logic (Sink)

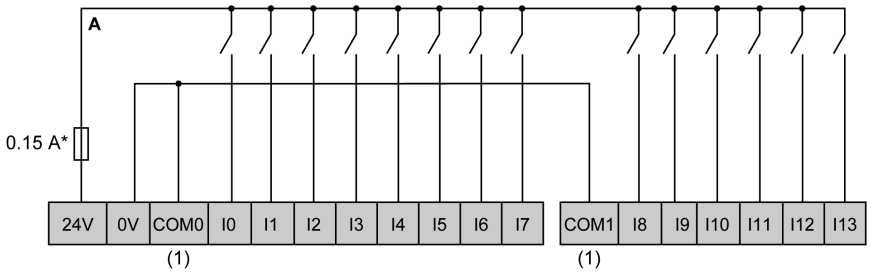

***** Type T fuse

A Sink wiring (positive logic)

(1) The COM0 and COM1 terminals are **not** connected internally.

The following figure shows the connection of the fast inputs:

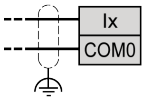

Ix where x=0...7

TM100C24RN / TM200C24R / TM200CE24R Inputs Wiring Diagram - Negative Logic (Source)

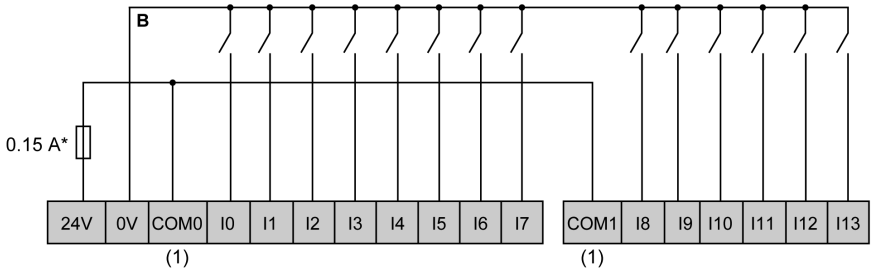

***** Type T fuse

B Source wiring (negative logic)

(1) The COM0 and COM1 terminals are **not** connected internally.

The following figure shows the connection of the fast inputs:

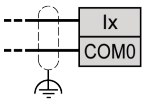

Ix where x=0...7

TM100C32RN / TM200C32R / TM200CE32R Inputs Wiring Diagram - Positive Logic (Sink)

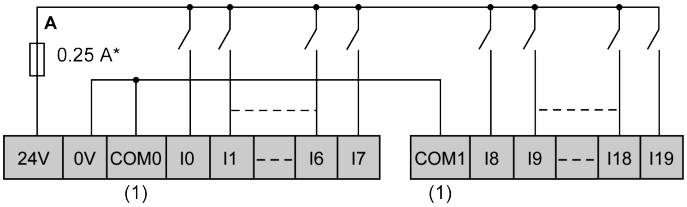

***** Type T fuse

A Sink wiring (positive logic)

(1) The COM0 and COM1 terminals are **not** connected internally.

The following figure shows the connection of the fast inputs:

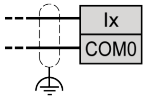

Ix where x=0...7

TM100C32RN / TM200C32R / TM200CE32R Inputs Wiring Diagram - Negative Logic (Source)

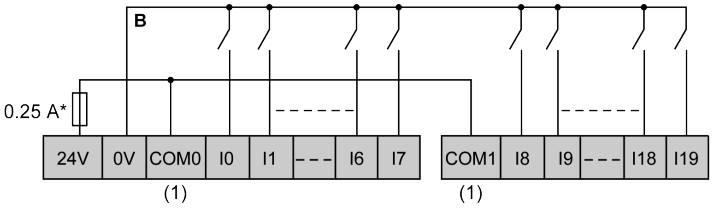

***** Type T fuse

B Source wiring (negative logic)

(1) The COM0 and COM1 terminals are **not** connected internally.

The following figure shows the connection of the fast inputs:

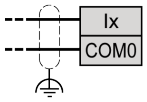

Ix where x=0...7

TM100C40RN / TM200C40R / TM200CE40R Inputs Wiring Diagram - Positive Logic (Sink)

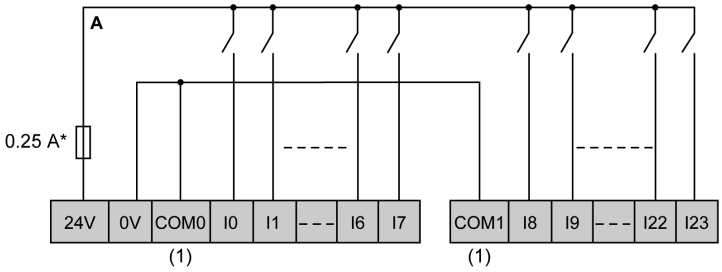

* Type T fuse

A Sink wiring (positive logic)

(1) The COM0 and COM1 terminals are **not** connected internally.

The following figure shows the connection of the fast inputs:

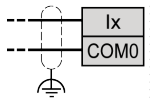

Ix where x=0...7

TM100C40RN / TM200C40R / TM200CE40R Inputs Wiring Diagram - Negative Logic (Source)

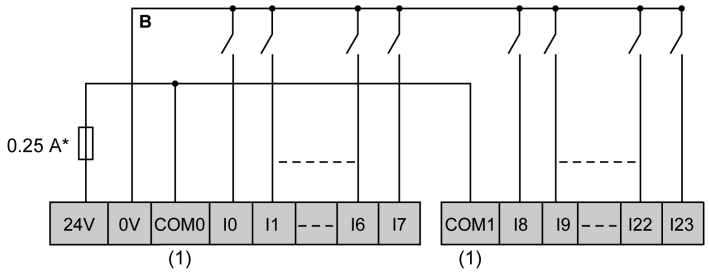

* Type T fuse

B Source wiring (negative logic)

(1) The COM0 and COM1 terminals are **not** connected internally.

The following figure shows the connection of the fast inputs:

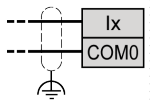

Ix where x=0...7

TM200C60R / TM200CE60R Inputs Wiring Diagram - Positive Logic (Sink)

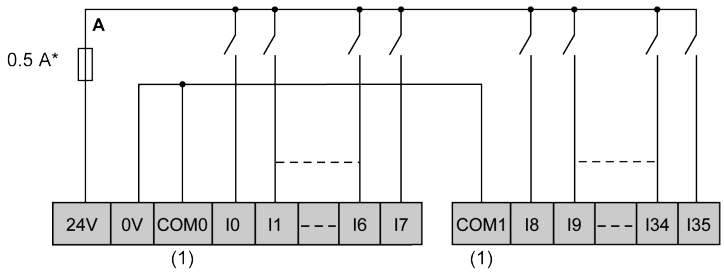

* Type T fuse

A Sink wiring (positive logic)

(1) The COM0 and COM1 terminals are **not** connected internally.

The following figure shows the connection of the fast inputs:

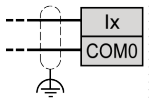

Ix where x=0...7

TM200C60R / TM200CE60R Inputs Wiring Diagram - Negative Logic (Source)

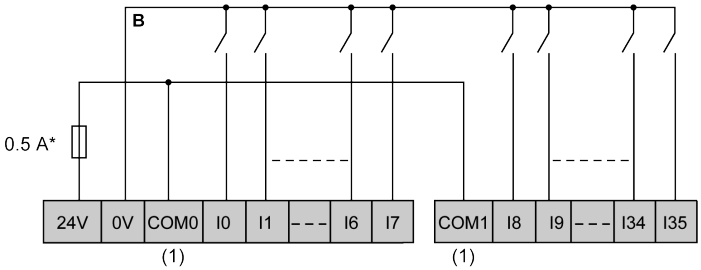

***** Type T fuse

B Source wiring (negative logic)

(1) The COM0 and COM1 terminals are **not** connected internally.

The following figure shows the connection of the fast inputs:

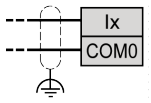

Ix where x=0...7

TM100C••RN / TM200C•••R Encoder Examples Wiring Diagram

The following figures show four wiring examples for TM100C••RN and TM200C•••R:

- dual-phase encoder without index
- dual-phase encoder with a limit switch and no index
- dual-phase encoder with index
- dual-phase encoder with index and PNP sensor

TM100C••RN / TM200C•••R with a dual-phase encoder without index:

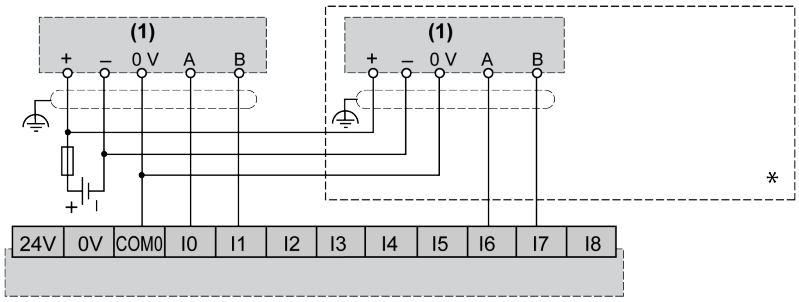

(1) Dual phase encoder without index

(*) Only with TM200C•••R

TM100C••RN / TM200C•••R with a dual-phase encoder with a limit switch and no index:

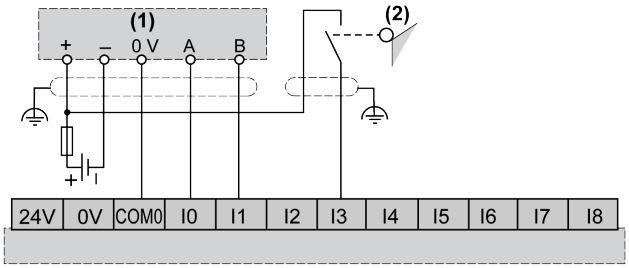

(1) Dual phase encoder without index

(2) Limit switch

TM100C••RN / TM200C•••R with a dual-phase encoder with index:

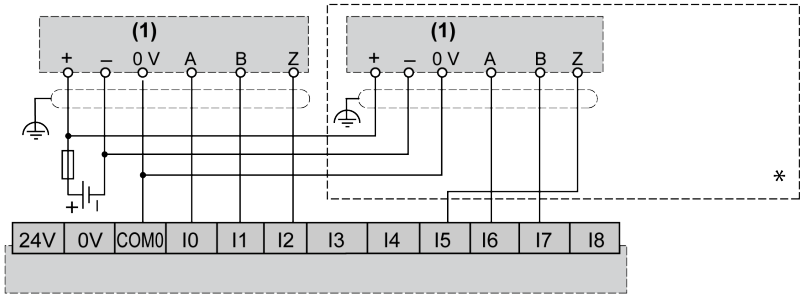

(1) Dual phase encoder with index

(*) Only with TM200C•••R

TM100C••RN / TM200C•••R with a dual-phase encoder with index and PNP sensor:

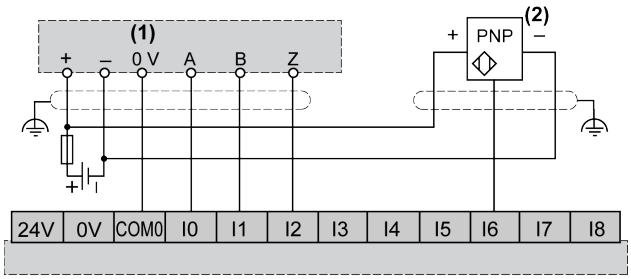

(1) Dual phase encoder with index

(2) PNP sensor

TM200C16U / TM200C16T Inputs Wiring Diagram

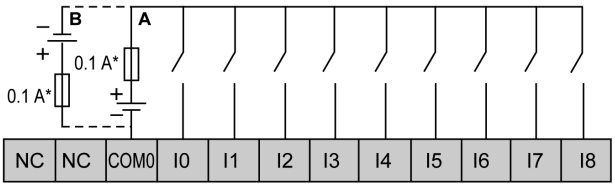

* Type T fuse

A Sink wiring (positive logic)

B Source wiring (negative logic)

The following figure shows the connection of the fast inputs:

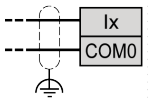

Ix where x=0...8

⚠WARNING

UNINTENDED EQUIPMENT OPERATION

Do not connect wires to unused terminals and/or terminals indicated as “No Connection (N.C.)”.

Failure to follow these instructions can result in death, serious injury, or equipment damage.

TM200C24U / TM200CE24U / TM200C24T / TM200CE24T Inputs Wiring Diagrams

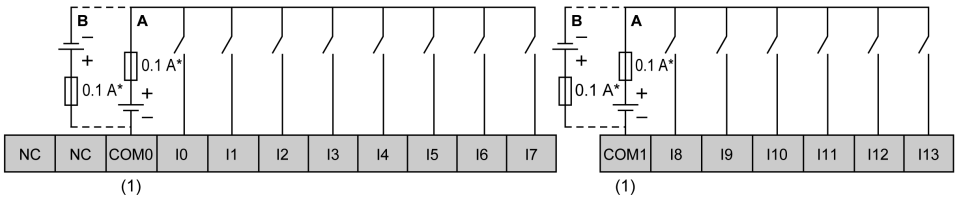

***** Type T fuse

A Sink wiring (positive logic)

B Source wiring (negative logic)

(1) The COM0 and COM1 terminals are **not** connected internally.

The following figure shows the connection of the fast inputs:

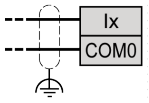

Ix where x=0...7

⚠WARNING

UNINTENDED EQUIPMENT OPERATION

Do not connect wires to unused terminals and/or terminals indicated as “No Connection (N.C.)”.

Failure to follow these instructions can result in death, serious injury, or equipment damage.

TM200C32U / TM200C32T Inputs Wiring Diagrams

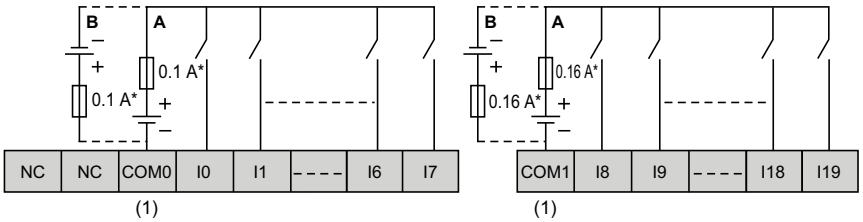

* Type T fuse

A Sink wiring (positive logic).

B Source wiring (negative logic)

(1) The COM0 and COM1 terminals are **not** connected internally.

The following figure shows the connection of the fast inputs:

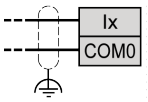

Ix where x=0...7

⚠WARNING

UNINTENDED EQUIPMENT OPERATION

Do not connect wires to unused terminals and/or terminals indicated as “No Connection (N.C.)”.

Failure to follow these instructions can result in death, serious injury, or equipment damage.

TM200C40U / TM200CE40U / TM200C40T / TM200CE40T Inputs Wiring Diagrams

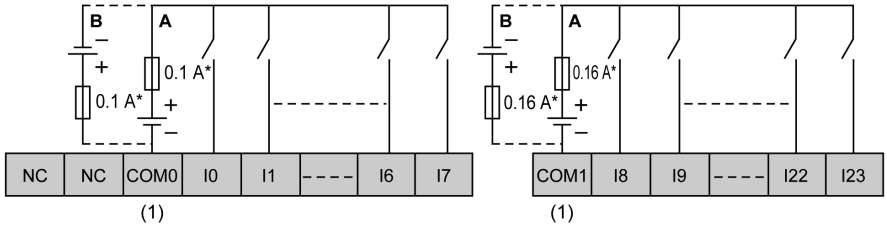

* Type T fuse

A Sink wiring (positive logic).

B Source wiring (negative logic)

(1) The COM0 and COM1 terminals are **not** connected internally.

The following figure shows the connection of the fast inputs:

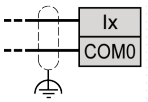

Ix where x=0...7

⚠WARNING

UNINTENDED EQUIPMENT OPERATION

Do not connect wires to unused terminals and/or terminals indicated as “No Connection (N.C.)”.

Failure to follow these instructions can result in death, serious injury, or equipment damage.

TM200C•••U / TM200C•••T Encoder Examples Wiring Diagrams

The following figures show four wiring examples for TM200C•••U, and TM200C•••T:

- dual-phase encoder without index
- dual-phase encoder with a limit switch and no index
- dual-phase encoder with index
- dual-phase encoder with index and PNP sensor

TM200C•••U / TM200C•••T with a dual-phase encoder without index:

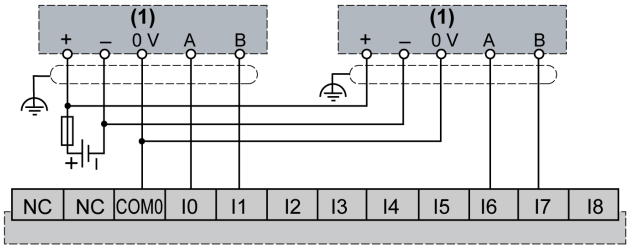

(1) Dual phase encoder without index

TM200C•••U / TM200C•••T with a dual-phase encoder with a limit switch and no index:

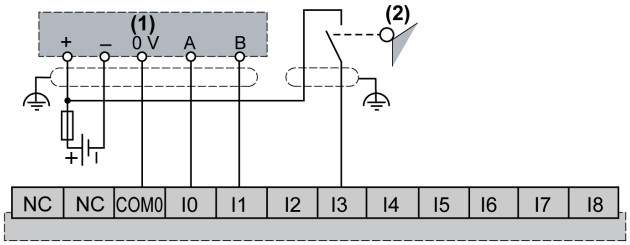

(1) Dual phase encoder without index

(2) Limit switch

TM200C•••U / TM200C•••T with a dual-phase encoder with index:

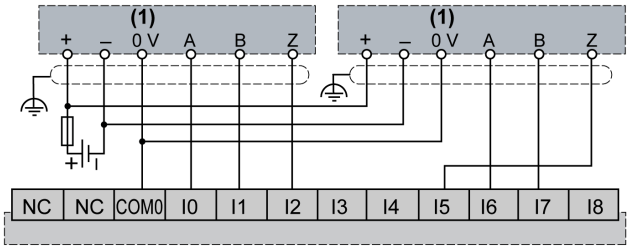

(1) Dual phase encoder with index

TM200C•••U / TM200C•••T with a dual-phase encoder with index and PNP sensor:

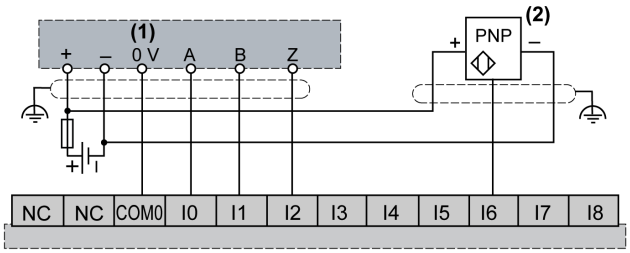

(1) Dual phase encoder with index

(2) PNP sensor

⚠WARNING

UNINTENDED EQUIPMENT OPERATION

Do not connect wires to unused terminals and/or terminals indicated as “No Connection (N.C.)”.

Failure to follow these instructions can result in death, serious injury, or equipment damage.

Relay Outputs Wiring Diagrams

Overview

For detailed information on the relay outputs, refer to *Relay Outputs Characteristics*, page 22 and *Output Management*, page 69.

⚠DANGER

FIRE HAZARD

- Use only the recommended wire sizes for the current capacity of the I/O channels and power supplies.
- For relay output (2 A) wiring, use conductors of at least 0.5 mm² (AWG 20) with a temperature rating of at least 80 °C (176 °F).
- For common conductors of relay output wiring (4 A), or relay output wiring greater than 2 A, use conductors of at least 1.0 mm² (AWG 16) with a temperature rating of at least 80 °C (176 °F).

Failure to follow these instructions will result in death or serious injury.

⚠WARNING

UNINTENDED EQUIPMENT OPERATION

Do not exceed any of the rated values specified in the environmental and electrical characteristics tables.

Failure to follow these instructions can result in death, serious injury, or equipment damage.

TM100C16RN / TM200C16R Outputs Wiring Diagram - Negative Logic (Sink)

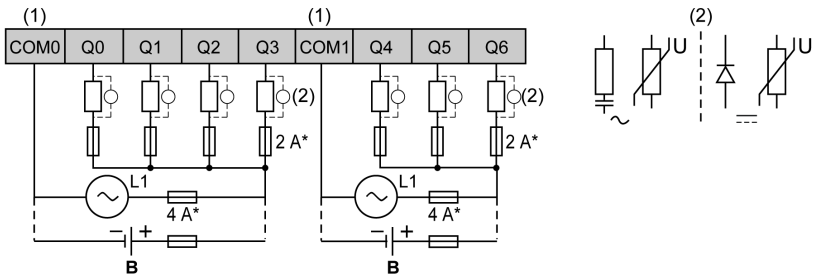

***** Type T fuse

B Sink wiring (negative logic)

(1) The COM0 and COM1 terminals are **not** connected internally.

(2) To improve the life time of the contacts, and to protect from potential inductive load damage, you must connect a free wheeling diode in parallel to each inductive DC load or an RC snubber in parallel of each inductive AC load.

NOTE: The assigned fuse values have been specified for the maximum current characteristics of the controller I/O and associated commons. You may have other considerations that are applicable based on the unique types of input and output devices you connect, and you should size your fuses accordingly.

TM100C16RN / TM200C16R Outputs Wiring Diagram - Positive Logic (Source)

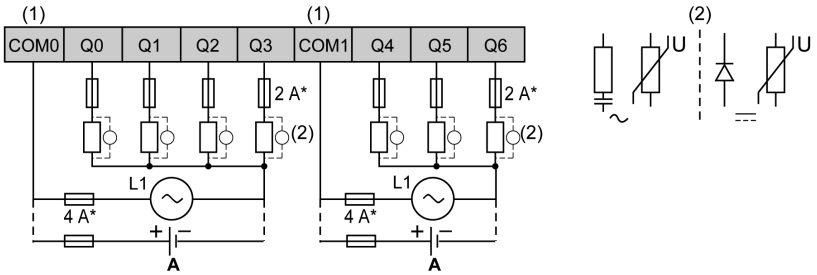

* Type T fuse

A Source wiring (positive logic)

(1) The COM0 and COM1 terminals are **not** connected internally.

(2) To improve the life time of the contacts, and to protect from potential inductive load damage, you must connect a free wheeling diode in parallel to each inductive DC load or an RC snubber in parallel of each inductive AC load.

NOTE: The assigned fuse values have been specified for the maximum current characteristics of the controller I/O and associated commons. You may have other considerations that are applicable based on the unique types of input and output devices you connect, and you should size your fuses accordingly.

TM100C24RN / TM200C24R / TM200CE24R Outputs Wiring Diagram - Negative Logic (Sink)

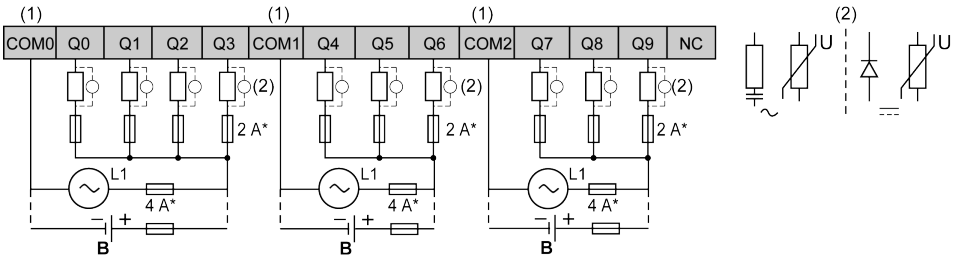

* Type T fuse

B Sink wiring (negative logic)

(1) The COM0, COM1, and COM2 terminals are **not** connected internally.

(2) To improve the life time of the contacts, and to protect from potential inductive load damage, you must connect a free wheeling diode in parallel to each inductive DC load or an RC snubber in parallel of each inductive AC load.

NOTE: The assigned fuse values have been specified for the maximum current characteristics of the controller I/O and associated commons. You may have other considerations that are applicable based on the unique types of input and output devices you connect, and you should size your fuses accordingly.

TM100C24RN / TM200C24R / TM200CE24R Outputs Wiring Diagram - Positive Logic (Source)

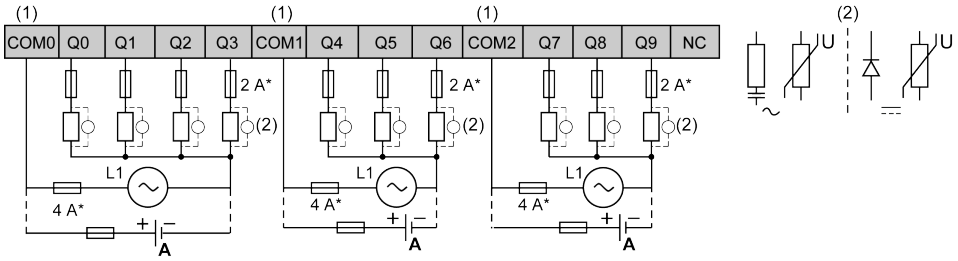

* Type T fuse

A Source wiring (positive logic)

(1) The COM0, COM1, and COM2 terminals are **not** connected internally.

(2) To improve the life time of the contacts, and to protect from potential inductive load damage, you must connect a free wheeling diode in parallel to each inductive DC load or an RC snubber in parallel of each inductive AC load.

> **NOTE:** The assigned fuse values have been specified for the maximum current characteristics of the controller I/O and associated commons. You may have other considerations that are applicable based on the unique types of input and output devices you connect, and you should size your fuses accordingly.

TM100C32RN / TM200C32R / TM200CE32R Outputs Wiring Diagram - Negative Logic (Sink)

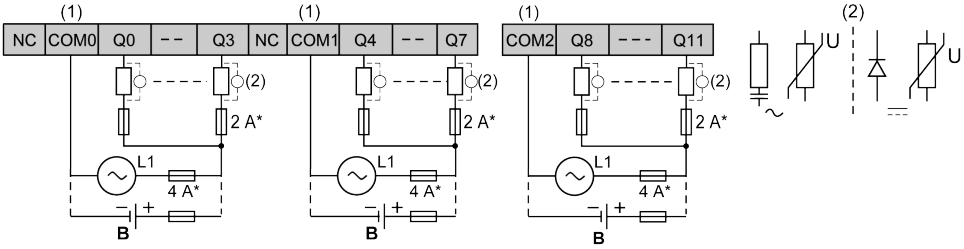

* Type T fuse

B Sink wiring (negative logic)

(1) The COM0, COM1, and COM2 terminals are **not** connected internally.

(2) To improve the life time of the contacts, and to protect from potential inductive load damage, you must connect a free wheeling diode in parallel to each inductive DC load or an RC snubber in parallel of each inductive AC load.

> **NOTE:** The assigned fuse values have been specified for the maximum current characteristics of the controller I/O and associated commons. You may have other considerations that are applicable based on the unique types of input and output devices you connect, and you should size your fuses accordingly.

TM100C32RN / TM200C32R / TM200CE32R Outputs Wiring Diagram - Positive Logic (Source)

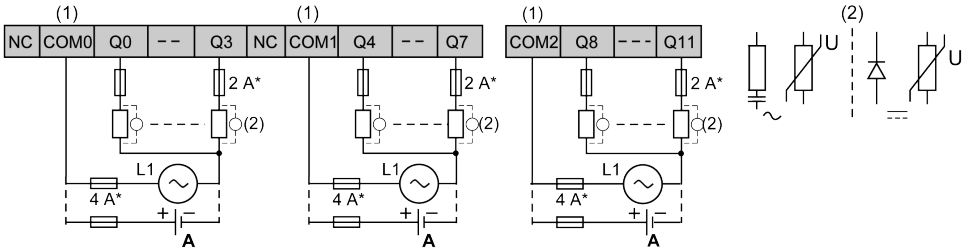

***** Type T fuse

A Source wiring (positive logic)

(1) The COM0, COM1, and COM2 terminals are **not** connected internally.

(2) To improve the life time of the contacts, and to protect from potential inductive load damage, you must connect a free wheeling diode in parallel to each inductive DC load or an RC snubber in parallel of each inductive AC load.

> **NOTE:** The assigned fuse values have been specified for the maximum current characteristics of the controller I/O and associated commons. You may have other considerations that are applicable based on the unique types of input and output devices you connect, and you should size your fuses accordingly.

TM100C40RN / TM200C40R / TM200CE40R Outputs Wiring Diagram - Negative Logic (Sink)

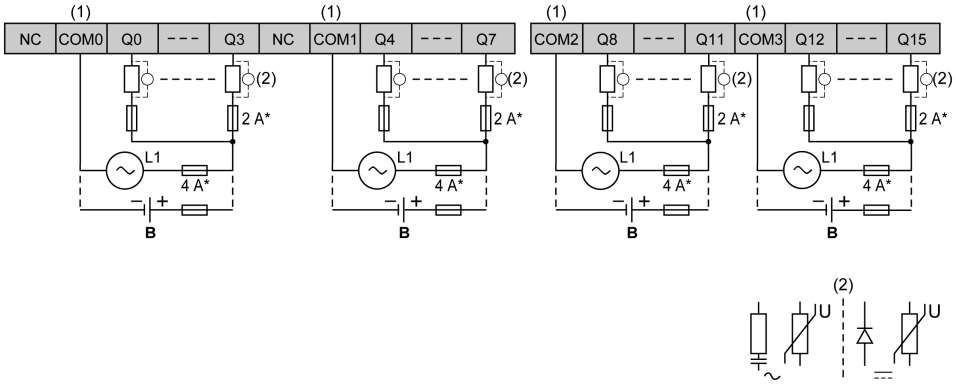

***** Type T fuse

B Sink wiring (negative logic)

(1) The COM0, COM1, COM2, and COM3 terminals are **not** connected internally.

(2) To improve the life time of the contacts, and to protect from potential inductive load damage, you must connect a free wheeling diode in parallel to each inductive DC load or an RC snubber in parallel of each inductive AC load.

> **NOTE:** The assigned fuse values have been specified for the maximum current characteristics of the controller I/O and associated commons. You may have other considerations that are applicable based on the unique types of input and output devices you connect, and you should size your fuses accordingly.

TM100C40RN / TM200C40R / TM200CE40R Outputs Wiring Diagram - Positive Logic (Source)

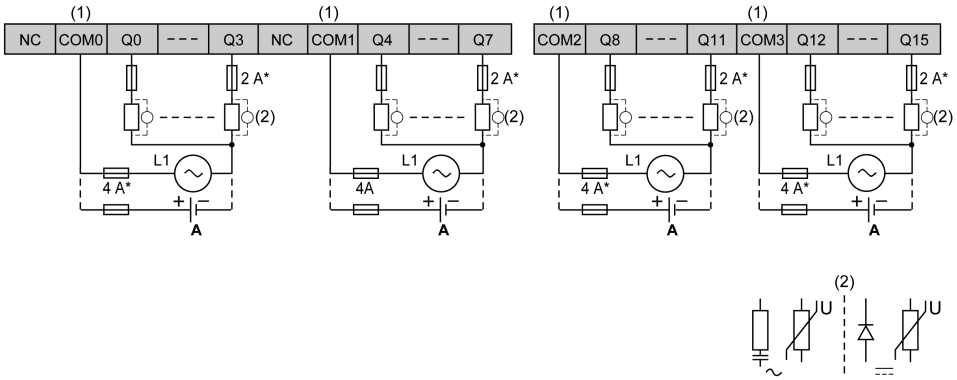

* Type T fuse

A Source wiring (positive logic)

(1) The COM0, COM1, COM2, and COM3 terminals are **not** connected internally.

(2) To improve the life time of the contacts, and to protect from potential inductive load damage, you must connect a free wheeling diode in parallel to each inductive DC load or an RC snubber in parallel of each inductive AC load.

> **NOTE:** The assigned fuse values have been specified for the maximum current characteristics of the controller I/O and associated commons. You may have other considerations that are applicable based on the unique types of input and output devices you connect, and you should size your fuses accordingly.

TM200C60R / TM200CE60R Outputs Wiring Diagram - Negative Logic (Sink)

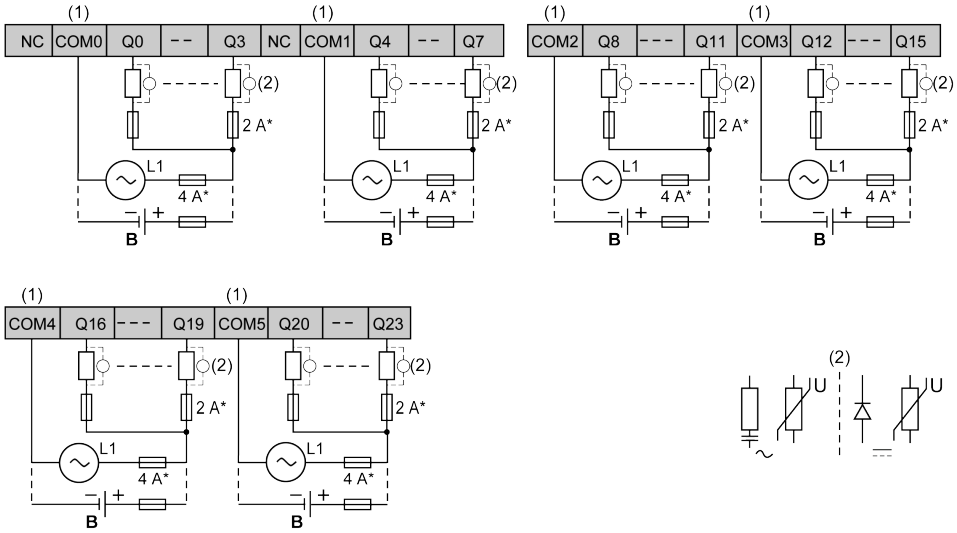

* Type T fuse

A Sink wiring (negative logic)

(1) The COM0, COM1, COM2, COM3, COM4, and COM5 terminals are **not** connected internally.

(2) To improve the life time of the contacts, and to protect from potential inductive load damage, you must connect a free wheeling diode in parallel to each inductive DC load or an RC snubber in parallel of each inductive AC load.

NOTE: The assigned fuse values have been specified for the maximum current characteristics of the controller I/O and associated commons. You may have other considerations that are applicable based on the unique types of input and output devices you connect, and you should size your fuses accordingly.

TM200C60R / TM200CE60R Outputs Wiring Diagram - Positive Logic (Source)

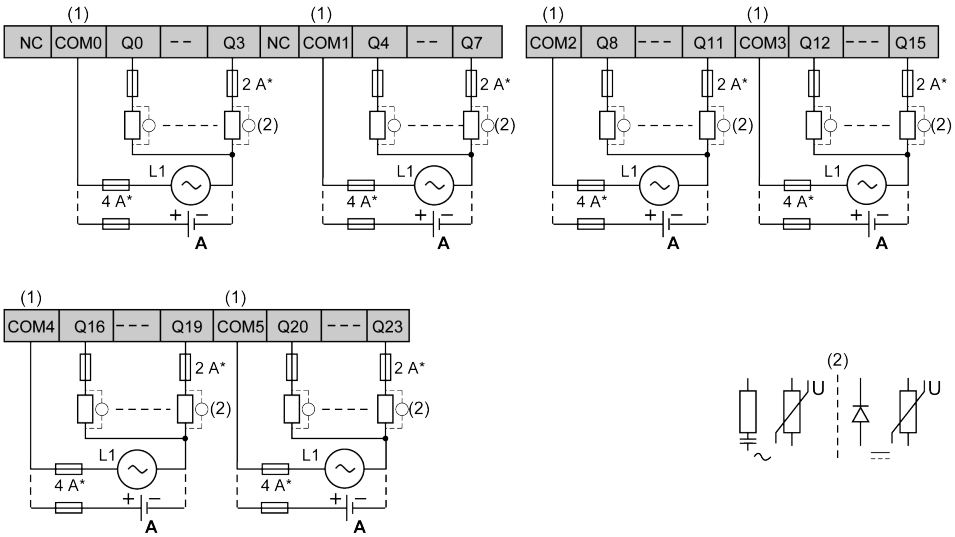

* Type T fuse

A Source wiring (positive logic)

(1) The COM0, COM1, COM2, COM3, COM4, and COM5 terminals are **not** connected internally.

(2) To improve the life time of the contacts, and to protect from potential inductive load damage, you must connect a free wheeling diode in parallel to each inductive DC load or an RC snubber in parallel of each inductive AC load.

NOTE: The assigned fuse values have been specified for the maximum current characteristics of the controller I/O and associated commons. You may have other considerations that are applicable based on the unique types of input and output devices you connect, and you should size your fuses accordingly.

Regular and Fast Transistor Outputs Wiring Diagrams

Overview

For detailed information on the regular and fast transistor outputs, refer to *Regular and Fast Transistor Outputs Characteristics*, page 25 and *Output Management*, page 69.

⚠ DANGER

FIRE HAZARD

Use only the recommended wire sizes for the current capacity of the I/O channels and powersupplies.

Failure to follow these instructions will result in death or serious injury.

⚠ WARNING

UNINTENDED EQUIPMENT OPERATION

Do not exceed any of the rated values specified in the environmental and electrical characteristics tables.

Failure to follow these instructions can result in death, serious injury, or equipment damage.

TM200C16U Outputs Wiring Diagram

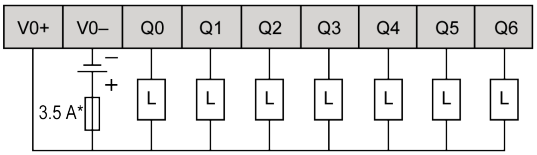

* Type T fuse

The following figure shows the connection of the fast outputs:

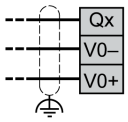

Qx where x=0...6

TM200C24U / TM200CE24U Outputs Wiring Diagram

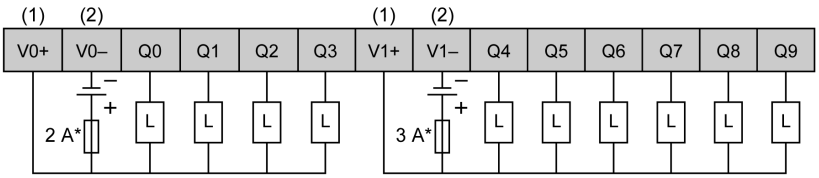

* Type T fuse

(1) The V0+ and V1+ terminals are **not** connected internally.

(2) The V0- and V1- terminals are **not** connected internally.

The following figure shows the connection of the fast outputs:

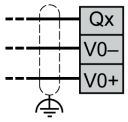

Qx where x=0...3

TM200C32U Outputs Wiring Diagram

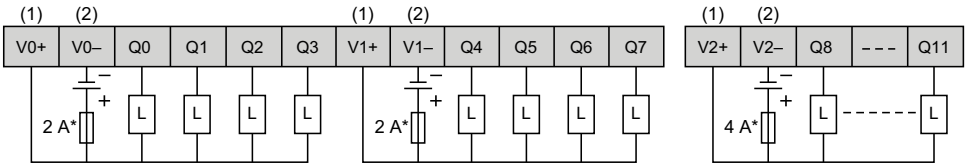

* Type T fuse

(1) The V0+, V1+, and V2+ terminals are **not** connected internally.

(2) The V0-, V1-, and V2- terminals are **not** connected internally.

The following figure shows the connection of the fast outputs:

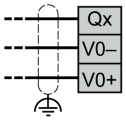

Qx where x=0...3

TM200C40U / TM200CE40U Outputs Wiring Diagram

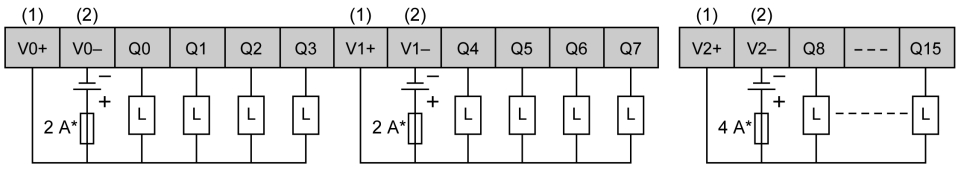

* Type T fuse

(1) The V0+, V1+, and V2+ terminals are **not** connected internally.

(2) The V0-, V1-, and V2- terminals are **not** connected internally.

The following figure shows the connection of the fast outputs:

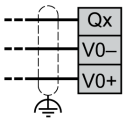

Qx where x=0...3

TM200C16T Outputs Wiring Diagram

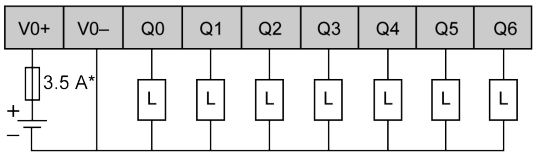

* Type T fuse

The following figure shows the connection of the fast outputs:

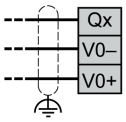

Qx where x=0...6

TM200C24T / TM200CE24T Outputs Wiring Diagram

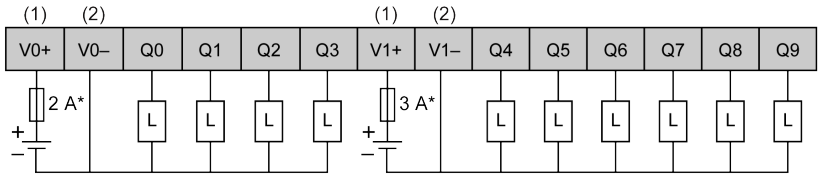

* Type T fuse

(1) The V0+ and V1+ terminals are **not** connected internally.

(2) The V0- and V1- terminals are **not** connected internally.

The following figure shows the connection of the fast outputs:

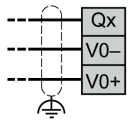

Qx where x=0...3

TM200C32T Outputs Wiring Diagram

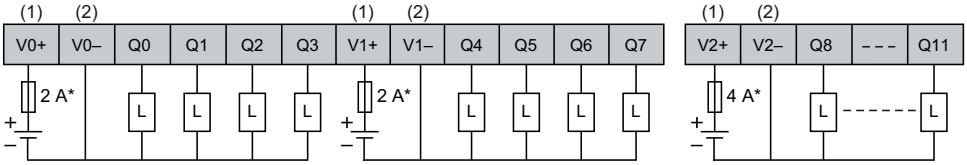

* Type T fuse

(1) The V0+, V1+, and V2+ terminals are **not** connected internally.

(2) The V0-, V1-, and V2- terminals are **not** connected internally.

The following figure shows the connection of the fast outputs:

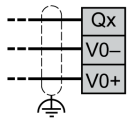

Qx where x=0...3

TM200C40T / TM200CE40T Outputs Wiring Diagram

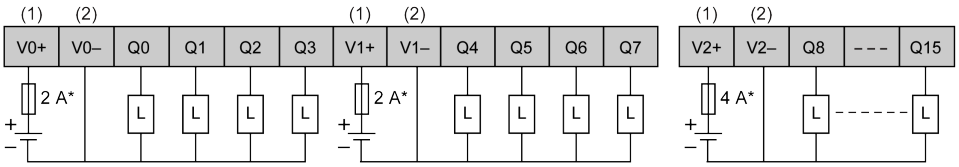

* Type T fuse

(1) The V0+, V1+, and V2+ terminals are **not** connected internally.

(2) The V0-, V1-, and V2- terminals are **not** connected internally.

The following figure shows the connection of the fast outputs:

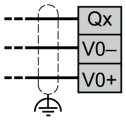

Qx where x=0...3

Ethernet Port

Overview

The TM200CE••• are equipped with an Ethernet communication port.

The following figure shows the location of the Ethernet port on the M200 Logic Controller:

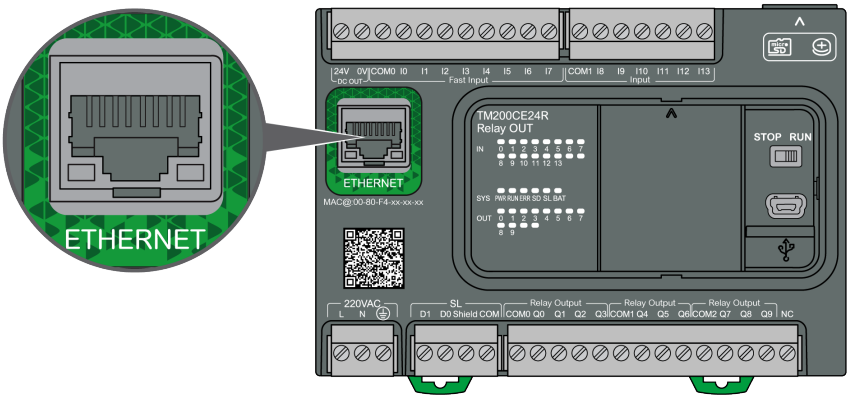

Characteristics

The following table describes Ethernet characteristics:

Characteristic	Description
Function	Modbus TCP/IP
Connector type	RJ45
Driver	10 M / 100 M auto negotiation
Cable type	Shielded
Automatic cross-over detection	Yes

Pin Assignment

The following figure shows the RJ45 Ethernet connector pin assignment:

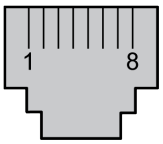

The following table describes the RJ45 Ethernet connector pins:

Pin N°	Signal
1	TD+
2	TD-

Pin N°	Signal
3	RD+
4	-
5	-
6	RD-
7	-
8	-

NOTE: The controller supports the MDI/MDIX auto-crossover cable function. It is not necessary to use special Ethernet crossover cables to connect devices directly to this port (connections without an Ethernet hub or switch).

Status LED

The following figures show the RJ45 connector status LED:

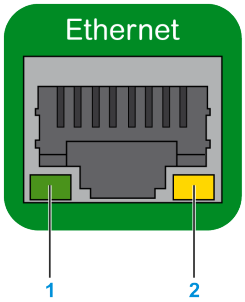

The following table describes the Ethernet status LEDs:

Label	Description	LED		
		Color	Status	Description
1: ACT	Ethernet activity	Green	Off	No activity
			Flashing green	Activity
2: LINK	Ethernet link	Green / Yellow	Off	No link
			On (Yellow)	Link speed: 10 Mb
			On (Green)	Link speed: 100 Mb

A change in the value of system bits `%S34`, `%S35`, or `%S36` may provoke a reinitialization of the Ethernet channel. As a consequence, the Ethernet channel may not be available for several seconds after a change in the values of these System Bits.

USB Mini-B Programming Port

Overview

The USB Mini-B Port is the programming port you can use to connect a PC with a USB host port using EcoStruxure Machine Expert-Basic software. Using a typical USB cable, this connection is suitable for quick updates of the program or short duration connections to perform maintenance and inspect data values. It is not suitable for long-term connections such as commissioning or monitoring without the use of specially adapted cables to help minimize electromagnetic interference.

⚠WARNING

UNINTENDED EQUIPMENT OPERATION OR INOPERABLE EQUIPMENT

- You must use a shielded USB cable such as a BMX XCAUSBH0•• secured to the functional ground (FE) of the system for any long-term connection.
- Do not connect more than one controller at a time using USB connections.
- Do not use the USB port(s), if so equipped, unless the location is known to be non-hazardous.

Failure to follow these instructions can result in death, serious injury, or equipment damage.

The following figure shows the location of the USB Mini-B programming port on the M100/M200 Logic Controller:

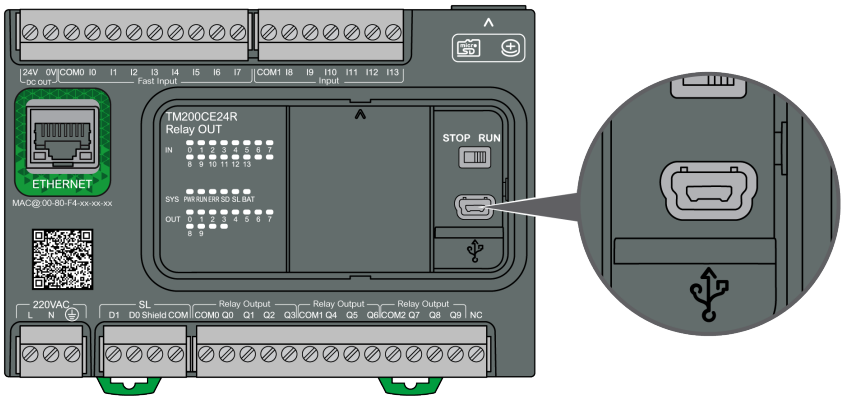

Characteristics

This table describes the characteristics of the USB Mini-B programming port:

Parameter	USB Programming Port
Function	Compatible with USB 2.0
Connector type	Mini-B
Isolation	Not isolated
Cable type	Shielded

Serial Line 1

Overview

The serial line 1 is used to communicate with devices supporting the Modbus protocol as either a master or slave and ASCII Protocol (printer...) and supports RS-485 and terminal block.

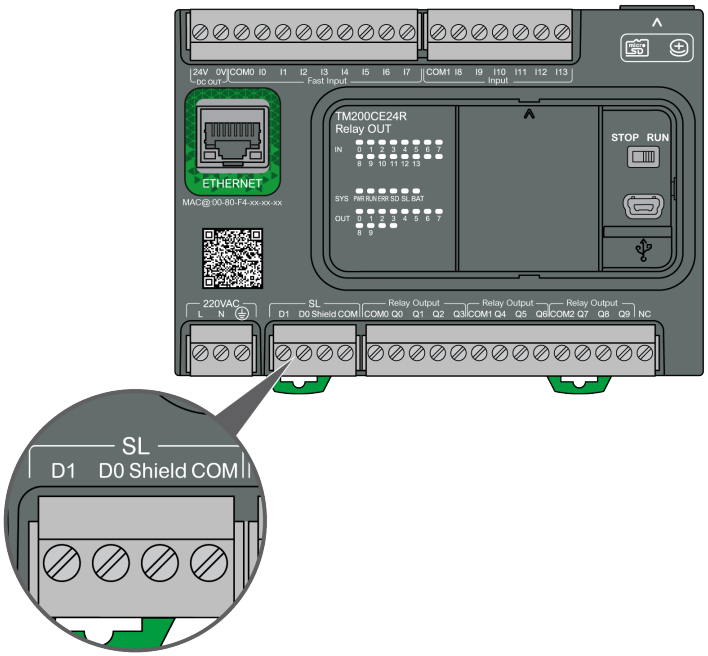

Characteristics

Characteristic		Description
Function		RS-485 software configured
Connector type		RS-485
Isolation		Not isolated
Baud rate		1200...115 200 bps
Cable	Type	Shielded
	Maximum length (between the controller and an isolated junction box)	50m (164 ft) for RS-485
Polarization		Software configuration is used to connect when the node is configured as a master. 560 Ω resistors are optional.
5 Vdc power supply for RS-485		No

NOTE: Some devices provide voltage on RS485 serial connections. Do not connect these voltage lines to your controller as they may damage the controller serial port electronics and render the serial port inoperable.

NOTICE

INOPERABLE EQUIPMENT

Use only the VW3A8306R•• serial cable to connect RS485 devices to your controller.

Failure to follow these instructions can result in equipment damage.

Pin Assignment

The following figure shows the pins of the RS-485 connector:

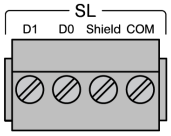

The table below describes the pin assignment for RS-485:

Pin	RS-485
D1	D1 (A+)
D0	D0 (B-)
Shield	Shield
COM	0 V Com.

⚠ WARNING

UNINTENDED EQUIPMENT OPERATION

Do not connect wires to unused terminals and/or terminals indicated as “No Connection (N.C.)”.

Failure to follow these instructions can result in death, serious injury, or equipment damage.

TMCR2••• Cartridges Wiring

TMCR2DM4U Wiring Diagram

Introduction

This cartridge has a removable screw terminal block for the connection of the inputs.

Wiring

See Wiring Best Practices, page 98.

Wiring Diagram

The following figure shows an example of the input and output connections:

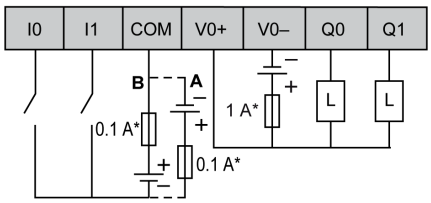

* Type T fuse

A Sink wiring (positive logic)

B Source wiring (negative logic)

TMCR2AI2 Wiring Diagram

Introduction

This cartridge has a non-removable screw terminal block for the connection of the inputs.

Wiring

See Wiring Best Practices, page 98.

Wiring Diagram

The following figure shows an example of the voltage and current input connection:

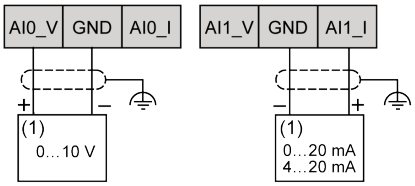

(1): Current/Voltage analog output device

NOTE: Each input can be connected to either a voltage or current input.

TMCR2AQ2V Wiring Diagram

Introduction

This cartridge has a non-removable screw terminal block for the connection of the outputs.

Wiring

See Wiring Best Practices, page 98.

Wiring Diagram

The following figure shows an example of the voltage output connection:

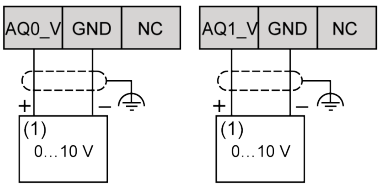

(1): Voltage analog input device

⚠WARNING

UNINTENDED EQUIPMENT OPERATION

Do not connect wires to unused terminals and/or terminals indicated as “No Connection (N.C.)”.

Failure to follow these instructions can result in death, serious injury, or equipment damage.

TMCR2AQ2C Wiring Diagram

Introduction

This cartridge has a non-removable screw terminal block for the connection of the outputs.

Wiring

See Wiring Best Practices, page 98.

Wiring Diagram

The following figure shows an example of the current output connection:

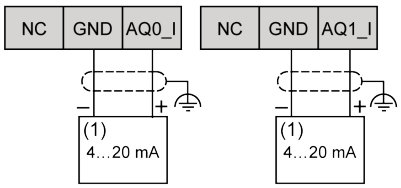

(1): Current analog input device

⚠WARNING

UNINTENDED EQUIPMENT OPERATION

Do not connect wires to unused terminals and/or terminals indicated as “No Connection (N.C.)”.

Failure to follow these instructions can result in death, serious injury, or equipment damage.

TMCR2AM3 Wiring Diagram

Introduction

This cartridge has a removable screw terminal block for the connection of the inputs.

Wiring

See Wiring Best Practices, page 98.

Wiring Diagram

The following figure shows an example of the voltage and current input connection:

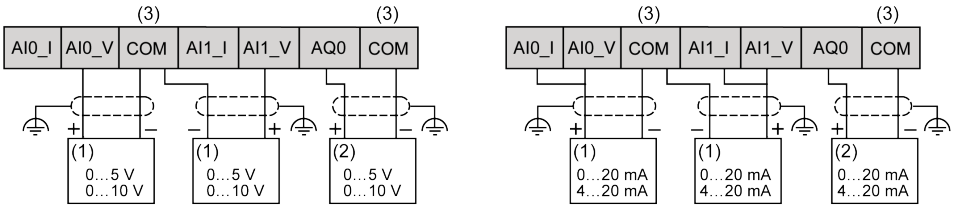

(1): Current/Voltage analog output device

(2): Current/Voltage analog input device

(3): The COM terminals are connected internally

NOTE: Each input can be connected to either a voltage or current input.

TMCR2TI2 Wiring Diagram

Introduction

This cartridge has a non-removable screw terminal block for the connection of the inputs.

Wiring

See Wiring Best Practices, page 98.

Wiring Diagram

The following figure shows an example of RTD and thermocouple probe connection:

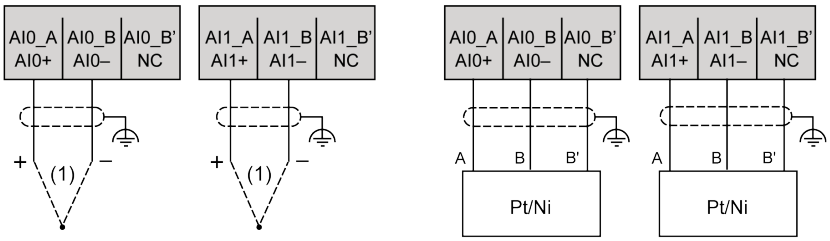

(1): Thermocouple

NOTE: Each input can be connected to either an RTD or thermocouple probe.

⚠WARNING

UNINTENDED EQUIPMENT OPERATION

Do not connect wires to unused terminals and/or terminals indicated as “No Connection (N.C.)”.

Failure to follow these instructions can result in death, serious injury, or equipment damage.

TMCR2SL1 Wiring Diagram

Introduction

This cartridge has a non-removable screw terminal block for the connection of the serial line wires.

Wiring

See Wiring Best Practices, page 98.

Wiring Diagram

The following figure shows an example of RS232 serial line connection:

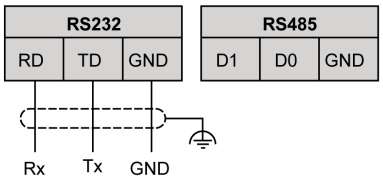

The following figure shows an example of RS485 serial line connection:

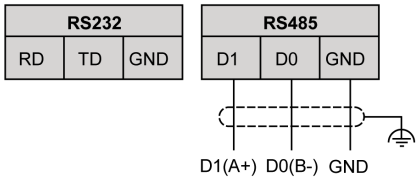

NOTE: Only 1 serial line (RS232 or RS485) can be connected to the cartridge.

NOTE: Only 1 TMCR2SL1 cartridge is managed per logic controller.

TMCR2SL1A Wiring Diagram

Introduction

This cartridge has a non-removable screw terminal block for the connection of the serial line wires.

Wiring

See Wiring Best Practices, page 98.

Wiring Diagram

The following figure shows an example of RS485 serial line connection:

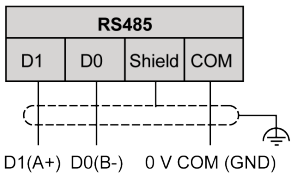

NOTE: Only 1 RS485 serial line can be connected to the cartridge.

NOTE: Only 1 TMCR2SL1A cartridge is managed for each logic controller.

TMCR2SL1S Wiring Diagram

Introduction

This cartridge has a non-removable screw terminal block for the connection of the serial line wires.

Wiring

See Wiring Best Practices, page 98.

Wiring Diagram

The following figure shows an example of RS485 serial line connection:

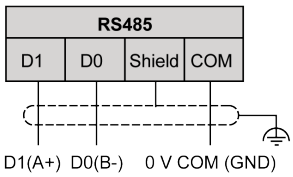

NOTE: Only 1 RS485 serial line can be connected to the cartridge.

NOTE: At most 2 TMCR2SL1S cartridges are managed for each logic controller.

TM3R Expansion Modules Wiring

TM3RDM16R Wiring Diagram

Introduction

These expansion modules have a built-in removable screw terminal block for the connection of inputs, outputs, and power supply.

Wiring Rules

See Wiring Best Practices, page 98.

Wiring Diagram

The following figure illustrates the connections between the inputs and outputs, the sensors and actuators, and their commons:

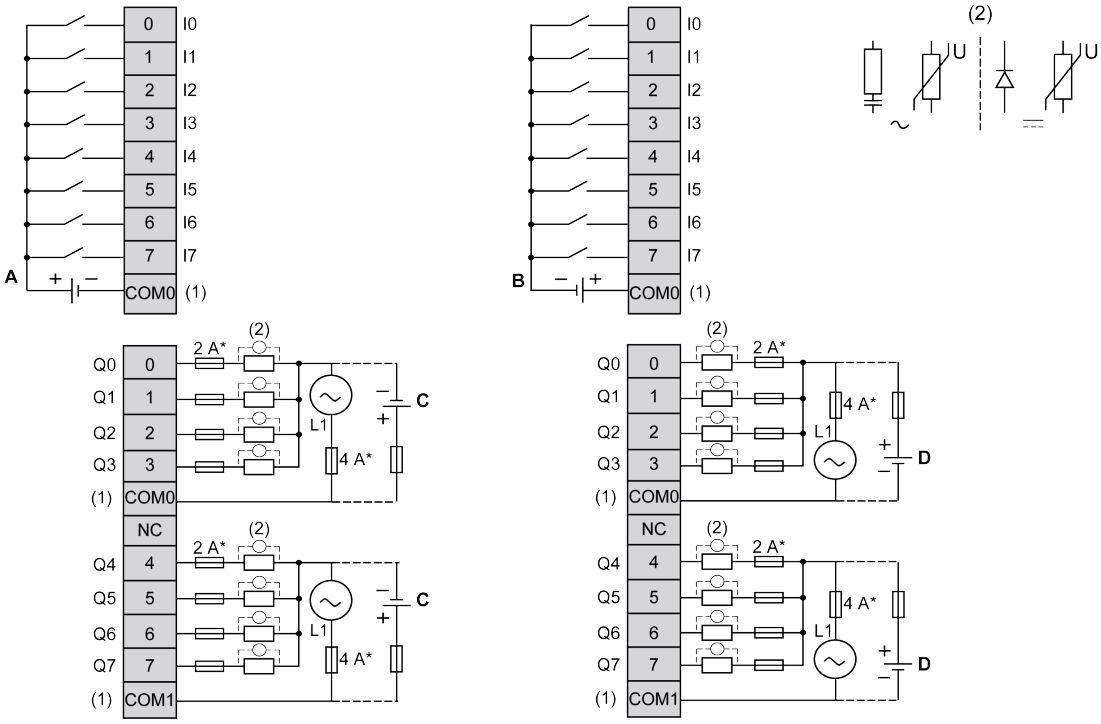

***** Type T Fuse

(1) The inputs COM0, outputs COM0 and COM1 terminals are **not** connected internally.

(2) To improve the life time of the contacts, and to protect from potential inductive load damage, connect a free wheeling diode in parallel to each inductive DC load or an RC snubber in parallel of each inductive AC load.

A Sink wiring (positive logic)

B Source wiring (negative logic)

C Source wiring (positive logic)

D Sink wiring (negative logic)

For information about 24 Vdc power supply, refer to DC Power Supply Characteristics (see Modicon TM3, Digital I/O Modules, Hardware Guide).

⚠ WARNING

UNINTENDED EQUIPMENT OPERATION

Do not connect wires to unused terminals and/or terminals indicated as “No Connection (N.C.)”.

Failure to follow these instructions can result in death, serious injury, or equipment damage.

TM3RDM32R Wiring Diagram

Introduction

These expansion modules have a built-in removable screw terminal block for the connection of inputs, outputs, and power supply.

Wiring Rules

See Wiring Best Practices, page 98.

Wiring Diagram

The following figure illustrates the connections between the inputs and outputs, the sensors and actuators, and their commons for a positive logic:

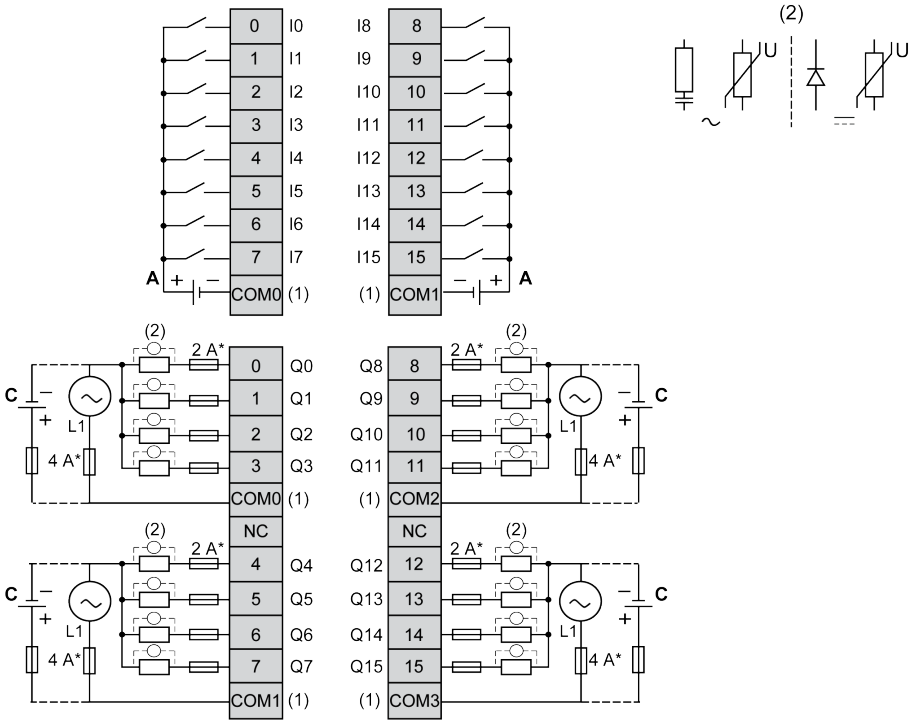

* Type T Fuse

(1) The inputs COM0, COM1, outputs COM0, COM1, COM2, and COM3 terminals are **not** connected internally.

(2) To improve the life time of the contacts, and to protect from potential inductive load damage, connect a free wheeling diode in parallel to each inductive DC load or an RC snubber in parallel of each inductive AC load.

A Sink wiring (positive logic)

C Source wiring (positive logic)

The following figure illustrates the connections between the inputs and outputs, the sensors and actuators, and their commons for a negative logic:

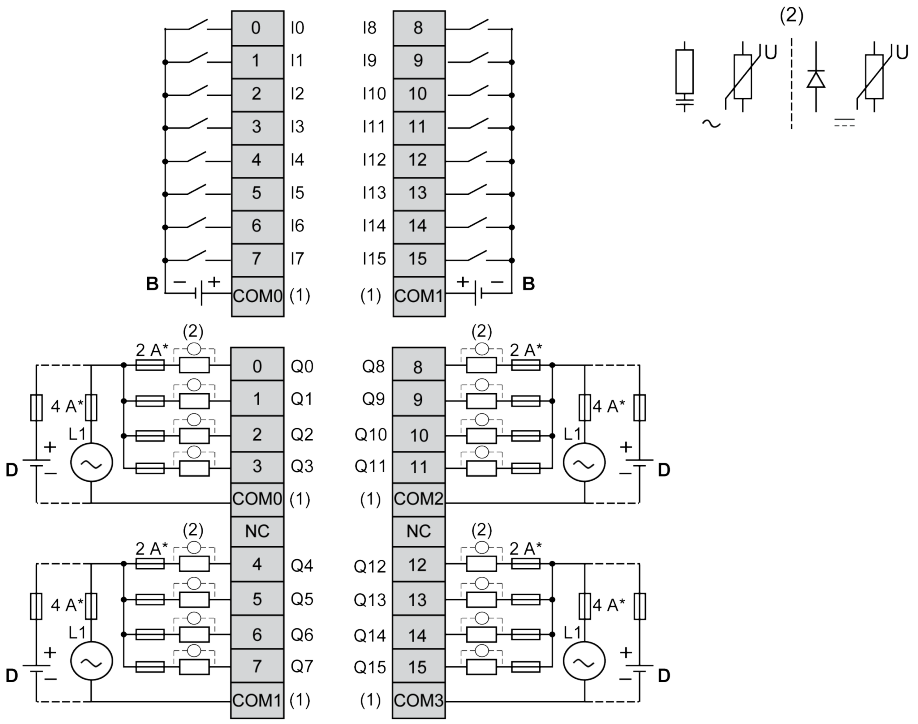

***** Type T Fuse

(1) The inputs COM0, COM1 and outputs COM0, COM1, COM2, and COM3 terminals are **not** connected internally.

(2) To improve the life time of the contacts, and to protect from potential inductive load damage, connect a free wheeling diode in parallel to each inductive DC load or an RC snubber in parallel of each inductive AC load.

B Source wiring (negative logic)

D Sink wiring (negative logic)

For information about 24 Vdc power supply, refer to DC Power Supply Characteristics (see Modicon TM3, Digital I/O Modules, Hardware Guide).

⚠ WARNING

UNINTENDED EQUIPMENT OPERATION

Do not connect wires to unused terminals and/or terminals indicated as “No Connection (N.C.)”.

Failure to follow these instructions can result in death, serious injury, or equipment damage.

Glossary

A

application:

A program including configuration data, symbols, and documentation.

B

bps:

(*bit per second*) A definition of transmission rate, also given in conjunction with multiplicator kilo (kbps) and mega (mbps).

C

configuration:

The arrangement and interconnection of hardware components within a system and the hardware and software parameters that determine the operating characteristics of the system.

controller:

Automates industrial processes (also known as programmable logic controller or programmable controller).

D

DIN:

(*Deutsches Institut für Normung*) A German institution that sets engineering and dimensional standards.

E

EIA rack:

(*electronic industries alliance rack*) A standardized (EIA 310-D, IEC 60297, and DIN 41494 SC48D) system for mounting various electronic modules in a stack or rack that is 19 inches (482.6 mm) wide.

EN:

EN identifies one of many European standards maintained by CEN (*European Committee for Standardization*), CENELEC (*European Committee for Electrotechnical Standardization*), or ETSI (*European Telecommunications Standards Institute*).

expansion bus:

An electronic communication bus between expansion I/O modules and a controller.

expansion connector:

A connector to attach expansion I/O modules.

F

FreqGen:

(*frequency generator*) A function that generates a square wave signal with programmable frequency.

G

GRAFCET:

The functioning of a sequential operation in a structured and graphic form.

This is an analytical method that divides any sequential control system into a series of steps, with which actions, transitions, and conditions are associated.

H

HE10:

Rectangular connector for electrical signals with frequencies below 3 MHz, complying with IEC 60807-2.

HSC:

(*high-speed counter*) A function that counts pulses on the controller or on expansion module inputs.

I

IEC 61131-3:

Part 3 of a 3-part IEC standard for industrial automation equipment. IEC 61131-3 is concerned with controller programming languages and defines 2 graphical and 2 textual programming language standards. The graphical programming languages are ladder diagram and function block diagram. The textual programming languages include structured text and instruction list.

IEC:

(*international electrotechnical commission*) A non-profit and non-governmental international standards organization that prepares and publishes international standards for electrical, electronic, and related technologies.

IL:

(*instruction list*) A program written in the language that is composed of a series of text-based instructions executed sequentially by the controller. Each instruction includes a line number, an instruction code, and an operand (refer to IEC 61131-3).

instruction list language:

A program written in the instruction list language that is composed of a series of text-based instructions executed sequentially by the controller. Each instruction includes a line number, an instruction code, and an operand (see IEC 61131-3).

I/O:

(*input/output*)

IP 20:

(*ingress protection*) The protection classification according to IEC 60529 offered by an enclosure, shown by the letter IP and 2 digits. The first digit indicates 2 factors: helping protect persons and for equipment. The second digit indicates helping protect against water. IP 20 devices help protect against electric contact of objects larger than 12.5 mm, but not against water.

L

ladder diagram language:

A graphical representation of the instructions of a controller program with symbols for contacts, coils, and blocks in a series of rungs executed sequentially by a controller (see IEC 61131-3).

LD:

(*ladder diagram*) A graphical representation of the instructions of a controller program with symbols for contacts, coils, and blocks in a series of rungs executed sequentially by a controller (refer to IEC 61131-3).

M

Modbus:

The protocol that allows communications between many devices connected to the same network.

N

N/O:

(*normally open*) A contact pair that opens when the actuator is de-energized (no power is applied) and closes when the actuator is energized (power is applied).

NEMA:

(*national electrical manufacturers association*) The standard for the performance of various classes of electrical enclosures. The NEMA standards cover corrosion resistance, ability to help protect from rain, submersion, and so on. For IEC member countries, the IEC 60529 standard classifies the ingress protection rating for enclosures.

P

PE:

(*Protective Earth*) A common grounding connection to help avoid the hazard of electric shock by keeping any exposed conductive surface of a device at earth potential. To avoid possible voltage drop, no current is allowed to flow in this conductor (also referred to as *protective ground* in North America or as an equipment grounding conductor in the US national electrical code).

program:

The component of an application that consists of compiled source code capable of being installed in the memory of a logic controller.

PTO:

(*pulse train outputs*) A fast output that oscillates between off and on in a fixed 50-50 duty cycle, producing a square wave form. PTO is especially well suited for applications such as stepper motors, frequency converters, and servo motor control, among others.

PWM:

(*pulse width modulation*) A fast output that oscillates between off and on in an adjustable duty cycle, producing a rectangular wave form (though you can adjust it to produce a square wave).

R

RJ45:

A standard type of 8-pin connector for network cables defined for Ethernet.

RS-232:

A standard type of serial communication bus, based on 3 wires (also known as EIA RS-232C or V.24).

RS-485:

A standard type of serial communication bus, based on 2 wires (also known as EIA RS-485).

S

SFC:

(*sequential function chart*) A language that is composed of steps with associated actions, transitions with associated logic condition, and directed links between steps and transitions. (The SFC standard is defined in IEC 848. It is IEC 61131-3 compliant.)

T

terminal block:

(*terminal block*) The component that mounts in an electronic module and provides electrical connections between the controller and the field devices.

Index

A

assembling to a controller 96

B

bounce filter 65

C

cartridge
  de-installation 95
  installation 93
certifications and standards 64
characteristics
  TM3RDM16R 44
  TM3RDM32R 50
  TMCR2AI2 30
  TMCR2AM3 34
  TMCR2AQ2C 33
  TMCR2AQ2V 31
  TMCR2DM4U 27
  TMCR2SL1 39
  TMCR2SL1A 40
  TMCR2SL1S 42
  TMCR2TI2 37
communication ports
  Ethernet 129
  serial line 1 132
  USB programming 130
configuration
  architecture 17
  maximum hardware 17
controller
  description 16
  features 11
  programming languages 11
  references 13–14
controllers
  disassembling a module 98

D

de-installation
  procedure 95
digital I/O modules
  specifications 60
Digital I/O modules
  Specifications 61

E

events 66

F

fallback
  configuring modes 72
features
  key features 11

G

general rules for implementing
  certifications and standards 64
Grounding 102

I

inductive load, output protection
  output protection, inductive load 101
input management 65
installation
  procedure 93
intended use 6

L

latching 65
LED 82
  status 82

M

maximum hardware configuration 17
micro SD card 76
mounting positions 86

O

output management 69

P

Power Supply 105, 108, 110
presentation
  TM3RDM16R 44
  TM3RDM32R 50
programming languages
  IL, ST, FBD, SFC, LD, Grafcet 11

Q

qualification of personnel 6

R

real time clock 79
Run/Stop 12, 66, 75

S

SD card 76
serial line 1
  communication ports 132
short-circuit or over-current on outputs 72, 74
specifications
  digital I/O modules 60
Specifications
  Digital I/O modules 60–61
status 82
  LED 82

T

TM3RDM16R

characteristics 44
presentation 44
wiring diagram 138
TM3RDM32R
characteristics 50
presentation 50
wiring diagram 139
TMCR2 cartridges 27
TMCR2AI2
characteristics 30
wiring diagram 134
TMCR2AM3
characteristics 34
wiring diagram 135
TMCR2AQ2C
characteristics 33
wiring diagram 135
TMCR2AQ2V
characteristics 31
wiring diagram 134
TMCR2DM4U
characteristics 27
wiring diagram 133
TMCR2SL1
characteristics 39
wiring diagram 137
TMCR2SL1A
characteristics 40
wiring diagram 137
TMCR2SL1S
characteristics 42
wiring diagram 138
TMCR2TI2
characteristics 37
wiring diagram 136

U

USB programming port 130

W

wiring 98
wiring diagram
TM100C16RN 111, 120–121
TM100C24RN 112, 121–122
TM100C32RN 113, 122–123
TM100C40RN 113–114, 123–124
TM200C16R 111, 120–121
TM200C16U 126
TM200C24R 112, 121–122
TM200C24T 128
TM200C24U 126
TM200C32R 113, 122–123
TM200C32T 128
TM200C32U 126
TM200C40R 113–114, 123–124
TM200C40T 128
TM200C40U 127
TM200C60R 114–115, 124–125
TM200CE24R 111–112, 121–122
TM200CE24T 128
TM200CE24U 126
TM200CE32R 113, 122–123
TM200CE40R 113–114, 123–124
TM200CE40T 128
TM200CE40U 127
TM200CE60R 114–115, 124–125
TM3RDM16R 138
TM3RDM32R 139
TMCR2AI2 134
TMCR2AM3 135
TMCR2AQ2C 135
TMCR2AQ2V 134
TMCR2DM4U 133
TMCR2SL1 137
TMCR2SL1A 137
TMCR2SL1S 138
TMCR2TI2 136

Schneider Electric
1884 Boulevard de la Défense
92000 Nanterre
France

se.com

© 2023 – 2026 Schneider Electric. All rights reserved.

EIO0000002023.06