Harmony P6 Basic Box/Model

User Guide

EIO0000005081.03
07/2026

www.se.com

Legal Information

The information provided in this document contains general descriptions, technical characteristics and/or recommendations related to products/solutions.

This document is not intended as a substitute for a detailed study or operational and site-specific development or schematic plan. It is not to be used for determining suitability or reliability of the products/solutions for specific user applications. It is the duty of any such user to perform or have any professional expert of its choice (integrator, specifier or the like) perform the appropriate and comprehensive risk analysis, evaluation and testing of the products/solutions with respect to the relevant specific application or use thereof.

The Schneider Electric brand and any trademarks of Schneider Electric and its subsidiaries referred to in this document are the property of Schneider Electric or its subsidiaries. All other brands may be trademarks of their respective owner.

This document and its content are protected under applicable copyright laws and provided for informative use only. No part of this document may be reproduced or transmitted in any form or by any means (electronic, mechanical, photocopying, recording, or otherwise), for any purpose, without the prior written permission of Schneider Electric.

Schneider Electric does not grant any right or license for commercial use of the document or its content, except for a non-exclusive and personal license to consult it on an "as is" basis.

Electrical equipment should be installed, operated, serviced, and maintained only by qualified personnel. No responsibility is assumed by Schneider Electric for any consequences arising out of the use of this material.

Schneider Electric reserves the right to make changes or updates with respect to or in the content of this document or the format thereof, at any time without notice.

To the extent permitted by applicable law, no responsibility or liability is assumed by Schneider Electric and its subsidiaries for any errors or omissions in the informational content of this document, as well as any non-intended use or misuse of the content thereof.

Table of Contents

Table of Contents 3
- Safety Information 6
- About the Document 7
- Overview 14
  - Configure-to-order (CTO) Part Number 14
  - Model Names 15
  - Package Contents 15
  - Certifications and Standards 17
  - Federal Communication Commission Radio Frequency Interference Statement - For USA 18
  - Hazardous Location Installation - For USA and Canada 19
- Accessories 21
  - Accessories 21
  - Maintenance Accessories 22
- Parts Identification and Functions 23
  - Box Module 23
    - Basic Box 23
    - Box Module LED Indication 24
  - Display Module 25
    - 12-inch and 15-inch 25
    - 10-inch Wide, 12-inch Wide, 15-inch Wide, 19-inch Wide, 22-inch Wide 25
    - Display Module LED Indications 26
- Specifications 27
  - General Specifications 27
    - Electrical Specifications 27
    - Environmental Specifications 29
    - Structural Specifications 30
  - Functional Specifications 34
    - Performance Specifications 34
    - Display Specifications 35
    - Touch Panel 36
    - Clock 36
  - Interface Specifications 36
    - Interfaces 36
    - Interface Connection 38
    - Serial Interface (COM on Box Module) 41
- Dimensions 43
  - Basic Box 43
    - External Dimensions 43
    - Dimensions with Book Mount Adapter 44
  - Panel Type - Basic Model 45
    - 12-inch Basic Model 45
    - 15-inch Basic Model 46
    - 10-inch Wide Basic Model 46
    - 12-inch Wide Basic Model 47
    - 15-inch Wide Basic Model 48
    - 19-inch Wide Basic Model 48

22-inch Wide Basic Model....49
Installation Fastener....49
Installation and Wiring....50
Installation Requirements....50
Box Module Installation....52
Introduction....52
Wall Mounting....54
Flat Mounting....54
Book Mounting....54
Panel Type Installation....56
Panel Cut Dimensions....56
Installation Procedure....57
Removal Procedure....59
Wiring the Power Supply....61
DC Power Cord Preparation....61
Connecting the DC Power Cord....62
Power Supply Precautions....63
Grounding....64
M.2 SSD Installation....65
Introduction....65
Replacing M.2 SSD for Main Storage....66
Installing M.2 SSD for Secondary Storage....69
SD Card Installation....72
Introduction....72
Inserting the SD Card....73
Removing the SD Card....75
Memory Installation....77
DIMM Installation....77
Installing/Replacing DIMM....78
Optional Interface Installation....80
Common Installation Procedure....80
RS-232C isolated x 2....81
RS-422/485 isolated x 2....87
Ethernet (GbE IEEE1588)....95
WiFi/Bluetooth with Antennas....100
4G Cellular....106
USB Type A/Type C Cable Clamp....112
Attaching USB Cable Clamp....112
Removing USB Cable Clamp....113
Front USB Cover....114
Maintenance....116
Regular Cleaning....116
Periodic Check Points....116
Replacing the Display Module....117
Introduction....117
Removing the Display Module from the Box Module....118
Installing the Display Module on the Box Module....118
Replacing the Installation Gasket....119
Introduction....119
Installing the Installation Gasket....120
Replacing the Battery and the Backlight....120

Cybersecurity 121
Cybersecurity Guideline 121
System Function Settings 122
Main Features 122
At First Startup 122
Windows Update 123
UEFI BIOS 124
UEFI BIOS Setup Menu 124
Changing the UEFI BIOS Password 124
Settings of Serial Interfaces on Box Module 125
In-Band ECC 125
Turbo Mode 126
Launcher 126
Starting the Launcher 126
Buzzer 127
Brightness 128
Calibration 129
Front USB 129
Write Filter 130
HORM (Windows 10 Only) 131
Shell 132
Power 133
System 134
Touch Mode 134
System Monitor 135
Window Locker 135
Cellular 136
Edit 136
Recovery USB (Windows 11 Only) 137
System Monitor 138
How to Run System Monitor 138
Node.js and Node-RED Update 140
Change Access Rights for Node-RED Related Files 140
Editing and Creating Dashboards 140
System Monitor API 140
TPM 140
Trellix Software 141
Introduction 141
Installation 141
Searching for the Manual 141
Uninstallation 142
System Backup 143
Windows 10 143
Windows 11 145
System Recovery 147
Windows 10 147
Windows 11 149
API 152

Safety Information

Important Information

Read these instructions carefully, and look at the equipment to become familiar with the device before trying to install, operate, service, or maintain it. The following special messages may appear throughout this documentation or on the equipment to warn of potential hazards or to call attention to information that clarifies or simplifies a procedure.

The addition of this symbol to a “Danger” or “Warning” safety label indicates that an electrical hazard exists which will result in personal injury if the instructions are not followed.

This is the safety alert symbol. It is used to alert you to potential personal injury hazards. Obey all safety messages that follow this symbol to avoid possible injury or death.

⚠ DANGER

DANGER indicates a hazardous situation which, if not avoided, **will result in** death or serious injury.

⚠ WARNING

WARNING indicates a hazardous situation which, if not avoided, **could result in** death or serious injury.

⚠ CAUTION

CAUTION indicates a hazardous situation which, if not avoided, **could result** in minor or moderate injury.

NOTICE

NOTICE is used to address practices not related to physical injury.

Please Note

Electrical equipment should be installed, operated, serviced, and maintained only by qualified personnel. No responsibility is assumed by Schneider Electric for any consequences arising out of the use of this material.

A qualified person is one who has skills and knowledge related to the construction and operation of electrical equipment and its installation, and has received safety training to recognize and avoid the hazards involved.

About the Document

Document Scope

This document describes the specifications, installation, operation, and maintenance of the Harmony P6 Basic Box and Model, which is used in industrial or factory automation systems.

This document is intended for users who design systems, or install and maintain components.

Validity Note

This documentation is valid for Harmony P6 Basic Box and Model.

The characteristics of the products described in this document are intended to match the characteristics that are available on www.se.com. As part of our corporate strategy for constant improvement, we may revise the content over time to enhance clarity and accuracy. If you see a difference between the characteristics in this document and the characteristics on www.se.com, consider www.se.com to contain the latest information.

Product Related Information

This product has been designed, developed and manufactured for use in industrial or factory automation systems.

- The product is not appropriate for use with aircraft control devices, medical life-support equipment, central trunk data transmission (communication) devices, or nuclear power control devices, due to inherent requirements for extremely high levels of safety and reliability.
- When using the product with transportation vehicles (trains, cars, and ships), disaster and crime prevention devices, safety equipment, or medical devices unrelated to life-support systems, use redundant and/or failsafe system designs to ensure reliability and safety.

If the equipment is used in a manner not specified by the manufacturer, the protection provided by the equipment may be impaired.

⚠⚠ DANGER

HAZARD OF ELECTRIC SHOCK, EXPLOSION, OR ARC FLASH

- Remove all power from the device before removing any covers or elements of the system, and prior to installing or removing any accessories, hardware, or cables.
- Unplug the power cable from both this product and the power supply prior to installing or removing the product.
- Always use a properly rated voltage sensing device to confirm power is off where and when indicated.
- Replace and secure all covers or elements of the system before applying power to this product.
- Use only the specified voltage when operating this product. This product is designed to use 12 to 24 Vdc. Always check whether your device is DC powered before applying power.
- When using this product in Class I, Division 2, Groups A, B, C, and D hazardous locations, install this product in an enclosure that prevents the operator from touching the back of this product without the use of tools.

Failure to follow these instructions will result in death or serious injury.

Critical alarm indicators and system functions require independent and redundant protection hardware and/or mechanical interlocks.

Please design a safety circuit external to this product so that the entire system operates safely even if the external power supply or this product fails or malfunctions.

- Interlocks and other circuits designed to interrupt or prevent equipment operation (such as emergency stops, protective circuits, and opposing action circuits) and circuits that prevent machine damage, such as positioning mechanisms, should be constructed external to the product.
- The product stops operation when it detects an abnormality such as a watchdog timer error. If an error occurs in the input/output control area, which cannot be monitored, it may lead to unexpected input/output behavior. Therefore, it is important to configure an external fail-safe circuit or mechanism.
- Problems with the relay or transistor in the output unit may cause the output to remain either in the ON or OFF state. Install an external monitoring circuit for output signals that may cause a serious accident.

Design the circuit so that power is supplied to the external device or load control power supply connected to this product before it starts.

When you cycle power, wait at least 10 seconds after it has been turned off. If this product is restarted too quickly, it may not operate correctly.

Do not create any switches on the touch panel that may cause personal injury, property damage, or compromise the safety of the equipment. Design the system so that controls for important operations are managed by devices other than this product, or by independent hardware switches.

In the event the screen cannot be properly read, for example, if the backlight is not functioning, it may be difficult or impossible to identify a function. Functions that may present a hazard if not immediately executed, such as a fuel shut-off, must be provided independently of this product.

⚠ WARNING

LOSS OF CONTROL

- The designer of any control scheme must consider the potential failure modes of control paths and, for certain critical control functions, provide a means to achieve a safe state during and after a path failure. Examples of critical control functions are emergency stop and overtravel stop, power outage and restart.
- Separate or redundant control paths must be provided for critical control functions.
- System control paths may include communication links. Consideration must be given to the implications of unanticipated transmission delays or failures of the link.
- Observe all accident prevention regulations and local safety guidelines.
- Each implementation of this product must be individually and thoroughly tested for proper operation before being placed into service.
- The machine control system design must take into account the possibility of the backlight no longer functioning and the operator being unable to control the machine, or making errors in the control of the machine.

Failure to follow these instructions can result in death, serious injury, or equipment damage.

For additional information, refer to NEMA ICS 1.1 (latest edition), "Safety Guidelines for the Application, Installation, and Maintenance of Solid State Control" and to NEMA ICS 7.1 (latest edition), "Safety Standards for Construction and Guide for Selection, Installation and Operation of Adjustable-Speed Drive Systems" or their equivalent governing your particular location.

NOTE: This product is a highly configurable device and is not based on a real-time operating system. Changes to the software and settings of the following must be considered new implementations as discussed in the previous warning messages. Examples of such changes include:

- System BIOS
- Operating System
- Installed hardware
- Installed software

⚠ WARNING

UNINTENDED EQUIPMENT OPERATION

- The application of this product requires expertise in the design and programming of control systems. Only persons with such expertise should be allowed to program, install, alter, and apply this product.
- Do not use this product as the only means of control for critical system functions such as motor start/stop or power control.
- Do not use this equipment as the only notification device for critical alarms, such as device overheating or overcurrent.
- Use only the software provided with this product. If you use other software, please confirm the operation and safety before use.
- Follow all applicable safety standard and local regulations and directives.

Failure to follow these instructions can result in death, serious injury, or equipment damage.

The following characteristics are specific to the LCD panel and are considered normal behavior:

- LCD screen may show unevenness in the brightness of certain images or may appear different when seen from outside the specified viewing angle. Extended shadows, or crosstalk may also appear on the sides of screen images.

- LCD screen pixels may contain black and white colored spots and color display may seem to have changed.
- When experiencing vibrations within a certain frequency range and vibration acceleration is above what is acceptable, the LCD screen may partially turn white. Once the vibration condition ends, the whitening of the screen is resolved.
- When the same image is displayed on the screen for a long period, an afterimage may appear when the image is changed.
- The panel brightness may decrease when used for a long time in an environment continuously filled with inert gas. To prevent deterioration of panel brightness, regularly ventilate the panel. For more information, please contact your local distributor.
  www.se.com/support

NOTICE

REDUCTION OF SERVICE LIFE OF PANEL

Change the screen image periodically and try not to display the same image for a long period of time.

Failure to follow these instructions can result in equipment damage.

⚠ WARNING

SERIOUS EYE AND SKIN INJURY

The liquid in the LCD panel contains an irritant:

- Avoid direct skin contact with the liquid.
- Wear gloves when you handle a broken or leaking unit.
- Do not use sharp objects or tools in the vicinity of the LCD panel.
- Handle the LCD panel carefully to prevent puncture, bursting, or cracking of the panel material.
- If the panel is damaged and any liquid comes in contact with your skin, immediately rinse the area with running water for at least 15 minutes. If the liquid gets in your eyes, immediately rinse your eyes with running water for at least 15 minutes and consult a doctor.

Failure to follow these instructions can result in death, serious injury, or equipment damage.

Precautions on using models with projected capacitive touch panel

Models with a projected capacitive touch panel may operate abnormally when the display surface is wet.

⚠ WARNING

LOSS OF CONTROL

- Do not touch the touch panel area during operating system startup.
- Do not operate when the touch panel surface is wet.
- If the touch panel surface is wet, remove any excess water with a soft cloth before operation.

Failure to follow these instructions can result in death, serious injury, or equipment damage.

NOTE:

- If **Touch Mode** is set to **Water detection mode**, when an abnormal touch (such as accidental contact with water or other liquids) occurs, touch is disabled for a few seconds to avoid unintended touch. Normal touch operation recovers a few seconds after the abnormal touch condition is removed. For information about Touch Mode, refer to Touch Mode, page 134.
- While the system is starting up, as the touch panel initial values are being checked, do not touch the touch panel area.

NOTICE

EQUIPMENT DAMAGE

- Do not press on the display of this product with excessive force or with a hard object.
- Do not press on the touch panel with a pointed object, such as the tip of a mechanical pencil or a screwdriver.
- Handle this product carefully to prevent puncture, bursting, or cracking of the panel material.

Failure to follow these instructions can result in equipment damage.

Compared to conventional analog resistive film, projected capacitive touch panels have higher transmittance and lighter touch operation, as well as supporting multi-touch. As it is able to detect weak changes in capacitance, projected capacitive touch panels are susceptible to environmental noise.

While our products have been optimized for industrial environmental noise and conform to CE marking, our products cannot support all environmental noise.

Please consider the following in the installation environment to avoid touch malfunction.

Example:

To reduce the noise voltage of the enclosure of the equipment housing this product:

- Implement noise countermeasures in the equipment. For example, install a noise filter on the inverter, servo amplifier, or other equipment. Refer to the manufacturer's instruction manual.
- Attach a ground wire noise filter to the FG connection of equipment.
- Connect the enclosure for the equipment to the building. For example, connect to the concrete or steel reinforcement parts of the building.

  NOTE: If there is a lot of environmental noise, because the noise filter for the touch panel controller has to run, touch response may become slow.

General Cybersecurity Information

In recent years, the growing number of networked machines and production plants has seen a corresponding increase in the potential for cyber threats, such as unauthorized access, data breaches, and operational disruptions. You must, therefore, consider all possible cybersecurity measures to help protect assets and systems against such threats.

To help keep your Schneider Electric products secure and protected, it is in your best interest to implement the cybersecurity best practices as described in the Cybersecurity Best Practices document.

Schneider Electric provides additional information and assistance:

- Subscribe to the Schneider Electric security newsletter.
- Visit the Cybersecurity Support Portal web page to:
  - Find Security Notifications.
  - Report vulnerabilities and incidents.
- Visit the Schneider Electric Cybersecurity and Data Protection Posture web page to:
  - Access the cybersecurity posture.
  - Learn more about cybersecurity in the cybersecurity academy.
  - Explore the cybersecurity services from Schneider Electric.

Product Related Cybersecurity Information

Refer to Cybersecurity, page 121.

Environmental Data

For product compliance and environmental information, refer to the Schneider Electric Environmental Data Program.

Available Languages of the Document

The document is available in these languages:

- English (EIO0000005081)
- French (EIO0000005082)
- German (EIO0000005083)
- Spanish (EIO0000005084)
- Italian (EIO0000005085)
- Chinese (EIO0000005086)

Related Documents

Title of documentation	Reference number
Cybersecurity Best Practices	Refer to General Cybersecurity Information, page 12.
HMI/IPC Cybersecurity Guide	EIO0000004948 (ENG)

You can download the manuals related to this product, such as the software manual, from the Schneider Electric download center (www.se.com/ww/en/download).

Information on Non-Inclusive or Insensitive Terminology

As a responsible, inclusive company, Schneider Electric is constantly updating its communications and products that contain non-inclusive or insensitive terminology. However, despite these efforts, our content may still contain terms that are deemed inappropriate by some customers.

Trademarks

Microsoft® and Windows® are registered trademarks of Microsoft Corporation in the United States and/or other countries.

Linux is a registered trademark of Linus Torvalds in the United States and other countries.

Intel Atom® is registered trademark of Intel Corporation.

QR Code is a registered trademark of DENSO WAVE INCORPORATED in Japan and other countries.

Product names used in this manual may be the registered trademarks owned by the respective proprietors.

Overview

What's in This Chapter

Configure-to-order (CTO) Part Number 14
Model Names 15
Package Contents 15
Certifications and Standards 17
Federal Communication Commission Radio Frequency Interference Statement - For USA 18
Hazardous Location Installation - For USA and Canada 19

Configure-to-order (CTO) Part Number

The following describes the configuration of part numbers.

Digit	Category	Number	Description
1–5	(Prefix)	HMIP6	
6	CPU (Base unit)	A	Atom 2 Cores, DIMM 4 GB, M.2 SSD 128 GB (Standard Endurance), 12-24 Vdc
		B	Atom 2 Cores, DIMM 8 GB, M.2 SSD 128 GB (Standard Endurance), 12-24 Vdc
		D	Atom 4 Cores, DIMM 8 GB, M.2 SSD 128 GB (Standard Endurance), 12-24 Vdc
7	Display Module	B	None (Box Module)
		6	12-inch
		7	15-inch
		D	10-inch Wide
		E	12-inch Wide
		F	15-inch Wide (FWXGA)
		K	15-inch Wide (FHD)
		G	19-inch Wide
		A	22-inch Wide
8	Power supply	B	12–24 Vdc
9	Slots	0	None
10	Fan	N	None
11	Main storage	A	M.2 SSD 128 GB (Standard Endurance)
12	Secondary storage	0	None
		1	M.2 SSD 128 GB (Standard Endurance)
		S	SD card 64 GB
13	Memory	D	DIMM 4 GB (4 GB x 1)
		W	DIMM 8 GB (4 GB x 2)
14	Options	N	None
		H	RS-232C isolated x 2
		J	RS-422/485 isolated x 2
		K	Ethernet (GbE IEEE1588) x 1
15	Operating system	N	None*1
		Q	Windows® 11 IoT Enterprise 2024 LTSC (64 bit)*2*3
		A	Windows® 10 IoT Enterprise 2021 LTSC (64 bit)
		B	Windows® 10 IoT Enterprise 2021 LTSC (64 bit) with Recovery USB
16	Software	N	None
		X	EcoStruxure Operator Terminal Expert Runtime license key code

Digit	Category	Number	Description
		T	EcoStruxure Machine SCADA Expert Runtime 500 license key code
		P	EcoStruxure Machine SCADA Expert Runtime 1.5 K license key code
		M	EcoStruxure Machine SCADA Expert Runtime 4 K license key code
		K	EcoStruxure Machine SCADA Expert Runtime 32 K license key code
		L	EcoStruxure Machine SCADA Expert Runtime 64 K license key code
		V	Vijeo Designer license key code
17	Kitting Service	0	None
		P	Software Pre-installation Service
18	(Reserved)	0	None

NOTE: All instructions applicable to the enclosed product and all safety precautions must be observed.

*1 Only customers who purchased the operating system as "N: None" can install and use a Linux OS downloaded from the official website at your own responsibility. For supported OS types, versions and interface options, refer to the Harmony P6 Open-Source Linux Component Guide.

*2 Only supported on Atom 4 Cores.

*3 HORM is not supported.

Model Names

Box Module and Panel Type are referred to as follows.

Panel Type is an all-in-one model in which the Box Module and Display Module are already connected.

	Box Module	Panel Type
Atom	Basic Box	●●-inch/●●-inch Wide Basic Model

Package Contents

This product has been carefully packed with special attention to quality. However, should you find anything damaged or missing, please contact your local distributor immediately.

Box Module

Verify all items listed here are present in your package:

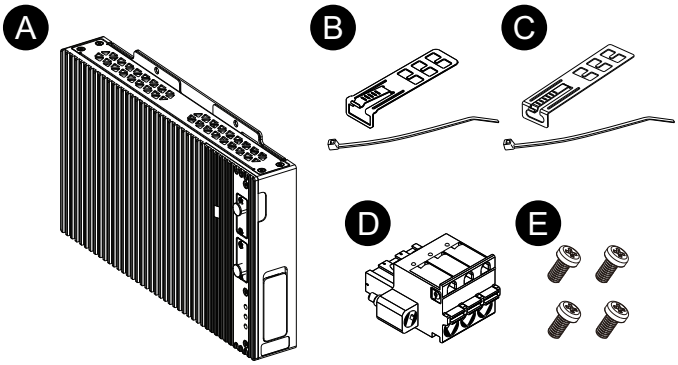

A. Harmony P6 Basic Box x 1
B. USB cable clamp (Type A) x 2 sets (2 clips and 2 ties)
C. USB cable clamp (Type C) x 1 set (1 clip and 1 tie)
D. DC Power connector x 1
E. M4 screws x 4 (to install the Display Module)

Panel Type

Verify all items listed here are present in your package:

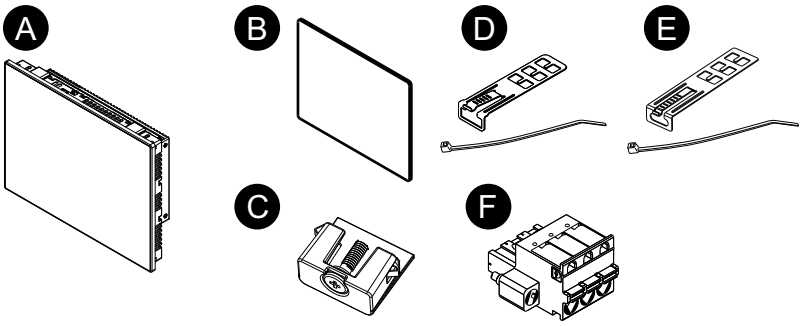

A. Harmony P6 Basic Model x 1
B. Installation gasket (attached to this product) x 1
C. Installation fasteners (to install on a panel):
   4 pieces (for 12-inch, 10-inch Wide and 12-inch Wide models)
   8 pieces (for 15-inch, 15-inch Wide, 19-inch Wide and 22-inch Wide models)
D. USB cable clamp (Type A) x 2 sets (2 clips and 2 ties)
E. USB cable clamp (Type C) x 1 set (1 clip and 1 tie)
F. DC Power connector x 1

Product Revision and QR Code

You can identify the product version (PV) and the software version (SV) from the product label.

You can also check the contents of this manual by using the QR code on the product label. Confirm the location of the QR code below and refer to the manual.

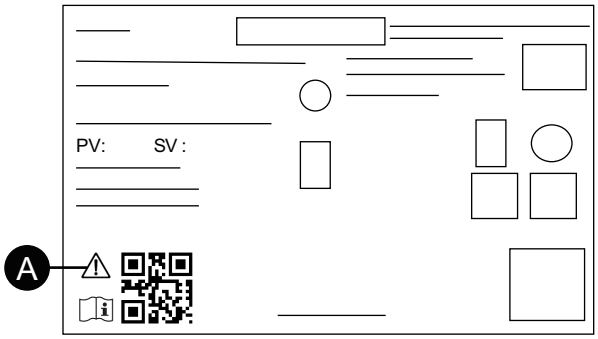

A. This mark indicates that you can refer to wiring requirements in this manual by using the QR code. Refer to Wiring the Power Supply, page 61.

Certifications and Standards

The certifications and standards listed below may include those that are not yet acquired. Please check the product marking and the following URL for the latest acquisition status.

www.se.com/ww/en/download

Agency Certifications

- Underwriters Laboratories Inc., UL 61010-2-201 and CSA C22.2 N°61010-2-201, for Industrial Control Equipment used in Ordinary Locations
- Underwriters Laboratories Inc., UL 121201 and CSA C22.2 N°213, for Industrial Control Equipment used in Class I, Division 2 Hazardous (Classified) Locations
- EAC certification(Russia, Belarus, Kazakhstan)
- IECEx / ATEX for use in zone 2 gas/ zone 22 dust
- DNV

Compliance Standards

Europe:

CE

- Directive 2014/30/EU (EMC)
- Directive 2014/34/EU (ATEX)

UKCA

- Regulation SI 2016 No.1091
- Regulation SI 2016 No.1107

Australia:

- RCM

Hazardous Substances

This product is designed to be compliant with the following environmental regulations, even if the product may not fall directly in the scope of the regulation:

- RoHS, Directive 2011/65/EU and 2015/863/EU

- RoHS China, Standard GB/T 26572
- REACH regulation EC 1907/2006

End of Life (WEEE)

The product contains electronic boards. It must be disposed of in specific treatment channels. The product contains cells and/or storage batteries which must be collected and processed separately when they have run out and at the end of product life (Directive 2012/19/EU).

Refer to Maintenance, page 116 when extracting cells and batteries from the product. These batteries do not contain a weight percentage of heavy metals over the threshold notified by European Battery Regulation 2023/1542.

Federal Communication Commission Radio Frequency Interference Statement - For USA

FCC Radio Interference Information

This product has been tested and found to comply with the Federal Communications Commission (FCC) limits for a Class A digital device, pursuant to Part 15 of the FCC Rules. These limits are designed to provide reasonable protection against harmful interference in a commercial, industrial or business environment. This product generates, uses, and can radiate radio frequency energy and, if not installed and used in accordance with the instructions, may cause or be subject to interference with radio communications. To minimize the possibility of electromagnetic interference in your application, observe the following two rules:

- Install and operate this product in such a manner that it does not radiate sufficient electromagnetic energy to cause interference in nearby devices.
- Install and test this product to ensure that the electromagnetic energy generated by nearby devices does not interfere with the operation of this product.

⚠ WARNING

ELECTROMAGNETIC / RADIO INTERFERENCE, UNINTENDED EQUIPMENT OPERATION

Check for electromagnetic and radio interference. If interference is detected, take the following actions.

- Increase the distance between this product and the interfering equipment.
- Reorient this product and the interfering equipment.
- Reroute power and communication lines to this product and the interfering equipment.
- Connect this product and the interfering equipment to different power supplies.
- Always use shielded cables when connecting this product to a peripheral device or another computer.

Failure to follow these instructions can result in death, serious injury, or equipment damage.

Changes or modifications not expressly approved by the party responsible for compliance could void the user’s authority to operate this product.

Hazardous Location Installation - For USA and Canada

General

This product is suitable for use in Class I, Division 2, Groups A, B, C, and D hazardous locations or in non-hazardous locations. Before installing or using this product, confirm that the Hazardous Location certification appears on the product labeling.

NOTE: Some products are not yet rated as suitable for use in hazardous locations. Always use your product in conformance with the product labeling and this manual.

⚠⚠DANGER

HAZARD OF ELECTRIC SHOCK, EXPLOSION, OR ARC FLASH

- Remove all power from the device before removing any covers or elements of the system, and prior to installing or removing any accessories, hardware, or cables.
- Unplug the power cable from both this product and the power supply prior to installing or removing the product.
- Always use a properly rated voltage sensing device to confirm power is off where and when indicated.
- Replace and secure all covers or elements of the system before applying power to this product.
- Use only the specified voltage when operating this product. This product is designed to use 12 to 24 Vdc. Always check whether your device is DC powered before applying power.

Failure to follow these instructions will result in death or serious injury.

⚠WARNING

EXPLOSION HAZARD

- Do not use this product in hazardous environments or locations other than Class I, Division 2, Groups A, B, C, and D.
- Substitution of any components may impair suitability for Class I, Division 2.
- Always confirm the UL 121201 or CSA C22.2 N°213 hazardous location rating of your device before installing or using it in a hazardous location.
- To apply or remove the supply power from this product installed in a Class I, Division 2 hazardous location, you must either: A) Use a switch located outside the hazardous environment, or B) Use a switch certified for Class I, Division 1 operation inside the hazardous area.
- Do not connect or disconnect equipment unless power has been switched off or the area is known to be non-hazardous. This applies to all connections including power, ground, serial, parallel, and network connections.
- Do not install any components, equipment, or accessories manufactured by us or by OEM unless these have also been qualified as suitable for use in Class I, Division 2, Groups A, B, C, and D locations.
- Always use shielded/grounded cables in hazardous locations.
- Use only non-incendive USB devices.
- Do not attempt to install, operate, modify, maintain, service, or otherwise alter this product except as permitted in this manual. Unpermitted actions may impair the suitability of this product for Class I, Division 2 operation.

Failure to follow these instructions can result in death, serious injury, or equipment damage.

Make sure that this product is properly rated for the location. If the intended location does not presently have a Class, Division and Group rating, then users

should consult the appropriate authorities having jurisdiction in order to determine the correct rating for that hazardous location.

Operation and Maintenance

The systems have been designed for compliance with relevant spark ignition tests.

⚠WARNING

EXPLOSION HAZARD

In addition to the other instructions in this manual, observe the following rules when installing this product in a hazardous location:

- Wire the equipment in accordance with the National Electrical Code article 501.10 (B) for Class I, Division 2 hazardous locations.
- Install this product in an enclosure suitable for the specific application.

Failure to follow these instructions can result in death, serious injury, or equipment damage.

NOTE: IP66F and IP67F are not part of UL certification.

Accessories

What's in This Chapter

Accessories 21
Maintenance Accessories 22

Accessories

Products may change or be discontinued without notice. Please check our website for the latest information.
www.se.com/docs

Product name	Product number
Interfaces	
M.2 RS-232C isolated x 2	HMIYP6M2R23P2
M.2 RS-422/485 isolated x 2	HMIYP6M2R42P2
M.2 Ethernet (GbE IEEE1588) x 1	HMIYP6M2ETH
4G Cellular for Global	HMIYP6M24GW
M.2 WiFi/Bluetooth	HMIYP6M2WF
Storage	
M.2 SSD 128 GB (Standard Endurance)	HMIYP6M2128L
M.2 SSD 128 GB (High Endurance)	HMIYP6M2128
M.2 SSD 256 GB (High Endurance)	HMIYP6M2256
M.2 SSD 512 GB (High Endurance)	HMIYP6M2512
SD Memory Card 64 GB	HMIYP6SD64GCX
Memory	
DIMM 4 GB	HMIYP6DM4
DIMM 8 GB	HMIYP6DM8
DIMM 16 GB	HMIYP6DM16
Cables	
4G Cellular extended antenna cable 3 m (2 pieces)	HMIYP6CB4G3M
WiFi/Bluetooth extended antenna cable 3 m (2 pieces)	HMIYP6CBWF3M
USB Front Cable	XBTZGUSB
Adapters	
Book mount adapter for Basic Box (2 pieces for side mounting)	HMIYP6ADBMB
Panel cutout adapter for HMIDT752 (15" Wide)*2	HMIZHAT7W1
Panel cutout adapter for HMIDT952 (19" Wide)*2	HMIZHAT8W1
Panel cutout adapter for Harmony iPC S-Panel PC (10" Wide)*2	HMIZPAT5W1
Panel cutout adapter for Harmony iPC Modular Panel PC (12" Wide)*2	HMIZPAT6W1
Panel cutout adapter for Harmony iPC Modular/ S-Panel PC (15" Wide)*2	HMIZPAT7W1
Panel cutout adapter for Harmony iPC Modular/ S-Panel PC (19" Wide)*2	HMIZPAT8W1
Panel cutout adapter for Harmony iPC Modular Panel PC (22" Wide)*2	HMIZPAT9W1

Product name	Product number
Screen sheets	
Anti-glare sheet for 10" Wide (5 sheets/set)	HMIZCAG5W1
Anti-glare sheet for 12" Wide (5 sheets/set)	HMIZCAG6W1
Anti-glare sheet for 15" Wide (5 sheets/set)	HMIZCAG7W1
Anti-glare sheet for 19" Wide (5 sheets/set)	HMIZCAG8W1
Anti-glare sheet for 22" Wide (5 sheets/set)	HMIZCAG9W1
Screen protection sheet for 12" (5 sheets/set)	HMIZG66
Screen protection sheet for 15" (5 sheets/set)	MPCYK50SPSKIT
Others	
M.2 cooling kit for Basic Box*3	HMIYP6HSM2B
Trellix license	HMIYP6LSMCA
Recovery USB for Basic Box	HMIYP6RUSW10B
USB Clamp Type A (5 pieces/set)	HMIZCCLUSA
USB Clamp Type C (5 pieces/set)	HMIYP6CLUSC

*1 This is a passive cable.

*2 The range for the allowable panel thickness varies depending on the panel cut adapter. For information, refer to the panel cut adapter instruction manual.

*3 Required when installing M.2 SSD.

Maintenance Accessories

Product name	Product number
Display Module	
12-inch Display Module	HMIDM6600TM*1
15-inch Display Module	HMIDM6700TM*1
10-inch Wide Display Module	HMIDM6500WC*1
12-inch Wide Display Module	HMIDM6600WC*1
15-inch Wide (FWXGA) Display Module	HMIDM6700WC*1
15-inch Wide (FHD) Display Module	HMIDM6710WC*1
19-inch Wide Display Module	HMIDM6800WC*1
22-inch Wide Display Module	HMIDM6900WC*1
Installation gaskets	
Installation gasket for 12" (1/set)	HMIZD56
Installation gasket for 15" (1/set)	HMIZD57
Installation gasket for 10" Wide (1/set)	HMIZD55W
Installation gasket for 12" Wide (1/set)	HMIZD56W
Installation gasket for 15" Wide (1/set)	HMIZX57W
Installation gasket for 19" Wide (1/set)	HMIZCWG8W1
Installation gasket for 22" Wide (1/set)	HMIZCWG9W1
Installation fastener (4 pieces/set)	HMIZCAF1
Power connector (DC) (5 pieces/set)	HMIZCCNDC1

*1 Includes models ending with additional characters.

Parts Identification and Functions

What's in This Chapter

Box Module 23
Display Module 25

Box Module

Basic Box

Front	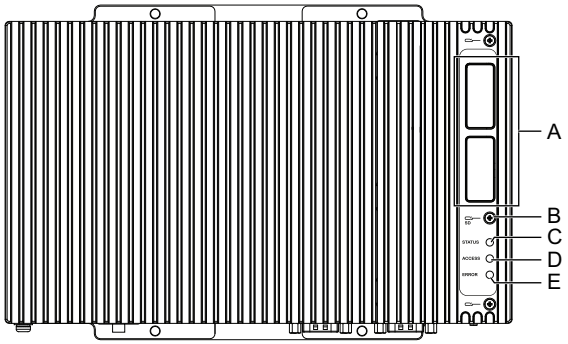
Right	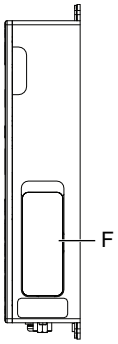
Bottom	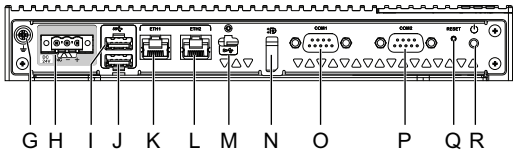

A. Optional module interface

B. SD slot screw

C. Status LED

D. Storage access LED

E. Error LED

F. SD slot cover

G. FG terminal (⏚)

H. DC power connector

I. USB 3.1 Gen1 (Type A)

J. USB 3.1 Gen1 (Type A)

K. Ethernet interface (ETH1)

L. Ethernet interface (ETH2)

M. USB 3.1 Gen1 (Type C)

N. DisplayPort

O. Serial interface (RS-232C/422/485, non-isolated) (COM1) *1

P. Serial interface (RS-232C/422/485, non-isolated) (COM2) *1

Q. Reset button

R. Power button *2

*1 For the settings of the serial ports on Box Module, refer to Settings of Serial Interfaces on Box Module, page 125.

*2 The power button in Windows Power Options is set to **Shut down** by default. The following options are available for the power button. Select an option suitable for your usage environment.

- **Do nothing**
- **Sleep**
- **Hibernate**
- **Shut down** (default)
- **Turn off the display**

NOTE: The marking attached on the rear face of the Box Module (⚠) indicates that you need to refer to the manual.

Box Module LED Indication

Status LED

Color	State	Description
Green	ON	S0 (in operation)
Orange	ON	S3
	Flashing	System is starting up.
Red	ON	S4, S4 (hybrid shutdown)*1, S5
-	OFF	G3 (power is off)

*1 S4 (hybrid shutdown) is S5 when Windows® fast startup is enabled

Wake-up Events

The following is a table showing the statuses that are set to the normal startup (S0) state when each action is executed.

ACPI state	Power state	Power up	Power button is ON	Wake on LAN	Touch input	USB equipment*1
S3	Sleep	–	✓	✓*2	✓	✓
S4	Hibernate	–	✓	✓	–	–
S4 (hybrid shutdown)	Hibernate	–	✓	–	–	–
S5	Soft off	–	✓	✓	–	–
G3	Mechanical off	✓	–	–	–	–

*1 Limited to USB devices that support the remote wake-up function.

*2 Only supported by Windows 10.

NOTE: If you turn on the power when G3 is set, it directly enters state S0.

Storage Access LED

Color	State	Description
Green	ON	Storage is being accessed.
-	OFF	Storage is not accessed.

Error LED

Color	State	Description
Red	ON	An error is detected*1
-	OFF	Normal operation

*1 What errors are detected depends on your application in use. To enable this feature, API is required. Refer to API, page 152.

Display Module

12-inch and 15-inch

Front	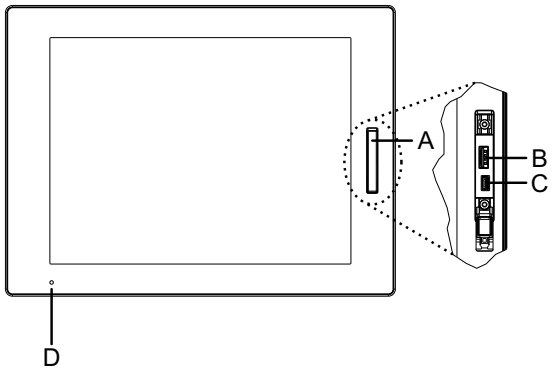

A. Front USB cover

B. USB 2.0 (Type A)*1

C. USB 2.0 (micro-B) (this interface is unavailable.)

D. Status LED

*1 By default, the front USB is disabled. To enable, set in the Launcher, page 126.

10-inch Wide, 12-inch Wide, 15-inch Wide, 19-inch Wide, 22-inch Wide

Front	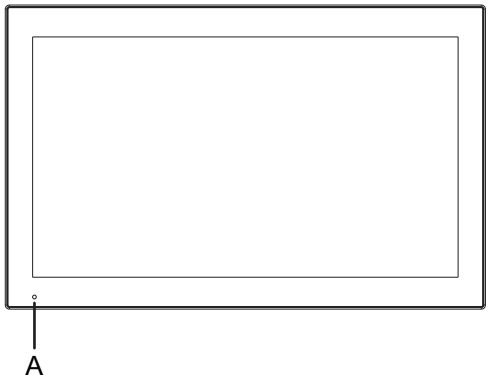

A. Status LED

Display Module LED Indications

Status LED

Color	State	Description
Green	ON	In operation
	Flashing	Screen is turned off.
Orange	ON*1	S3, S4, S4 (hybrid shutdown)*2, S5
	Flashing	Either software starting up or internal error*3
Orange/Red	Alternating	System monitor error
–	OFF	Power is off.

*1 Immediately after hibernation or when HORM is enabled, the LED on the Display Module turns orange right away, but turn off the power only after confirming the status LED on the Box Module has turned red.

NOTE: HORM is supported only on Windows 10.

*2 S4 (hybrid shutdown) is S5 when Windows® fast startup is enabled.

*3 Restart if flashing orange continues.

Specifications

What's in This Chapter

General Specifications.....27
Functional Specifications.....34
Interface Specifications.....36

General Specifications

Electrical Specifications

Box Module

Rated input voltage		12...24 Vdc
Input voltage limits		9...36 Vdc
Voltage dip/short interruption immunity		20.4 Vdc: 1 ms or less
Power consumption	Max	Basic Box: 45 W
	When power is not supplied to external devices	Basic Box: 27 W
In-rush current		30 A or less
Dielectric strength		N/A (non-isolated)
Insulation resistance		N/A (non-isolated)

Panel Type

Rated input voltage		12... 24 Vdc
Input voltage limits		9...36 Vdc
Voltage dip/short interruption immunity		20.4 Vdc: 1 ms or less
Power consumption	Max	12": 57 W 15": 61 W 10" Wide: 53 W 12" Wide: 56 W 15" Wide (FWXGA): 59 W 15" Wide (FHD): 64 W 19" Wide: 69 W 22" Wide: 70 W
	When power is not supplied to external devices	12": 39 W 15": 43 W 10" Wide: 35 W 12" Wide: 38 W 15" Wide (FWXGA): 41 W 15" Wide (FHD): 46 W 19" Wide: 51 W 22" Wide: 52 W
	When screen turns off (power is not supplied to external devices)	29 W
In-rush current		30 A or less
Dielectric strength		N/A (non-isolated)
Insulation resistance		N/A (non-isolated)

Environmental Specifications

NOTE:

- When using any of the options for this product, check the specifications for special conditions or cautions that may apply to this product.
- For Wall/ Flat/ Book mounting and Panel (Landscape/Portrait) mounting, refer to Installation and Wiring, page 50.

Box Module

Physical environment	
Ambient air temperature (T-Code: T4)	0...55 °C (32...131 °F)
Storage temperature	-20...60 °C (-4...140 °F)
Ambient air and storage humidity	10...90% RH (non-condensing, wet bulb temperature 39 °C [102.2 °F] or less)
Dust	0.1 mg/m^3 (10^{-7} oz/ft^3) or less (non-conductive levels)
Pollution degree	For use in Pollution Degree 2 environment
Corrosive gases	Free of corrosive gases
Atmospheric pressure (operating altitude)	800...1,114 hPa (2,000 m [6,561 ft] or lower)
Mechanical environment	
Vibration resistance	IEC/EN 61131-2 compliant 5...9 Hz Single amplitude 3.5 mm (0.14 in) 9...150 Hz Fixed acceleration: 9.8 m/s^2 X, Y, Z directions for 10 cycles (approximately 100 minutes)
Shock resistance	IEC/EN 61131-2 compliant 147 m/s^2, X, Y, Z directions for 3 times
Electrical environment	
Electrical fast transient/ burst immunity	IEC 61000-4-4 2 kV: Power port 1 kV: Signal ports
Electrostatic discharge immunity	Contact discharge method: 6 kV Air discharge method: 8 kV (IEC/EN 61000-4-2 Level 3)

Panel Type

Physical environment	
Ambient air temperature (T-Code: T4)	0...55 °C (32...131 °F) (for 19-inch Wide and 22-inch Wide: 0...50 °C [32...122 °F])
Storage temperature	-20...60 °C (-4...140 °F)
Ambient air and storage humidity	10...90% RH (non-condensing, wet bulb temperature 39 °C [102.2 °F] or less)
Dust	0.1 mg/m^3 (10^{-7} oz/ft^3) or less (non-conductive levels)
Pollution degree	For use in Pollution Degree 2 environment
Corrosive gases	Free of corrosive gases
Atmospheric pressure (operating altitude)	800...1,114 hPa (2,000 m [6,561 ft] or lower)
Mechanical environment	

Vibration resistance	IEC/EN 61131-2 compliant 5...9 Hz Single amplitude 3.5 mm (0.14 in) 9...150 Hz Fixed acceleration: 9.8 m/s^2 X, Y, Z directions for 10 cycles (approximately 100 minutes)
Shock resistance	IEC/EN 61131-2 compliant 147 m/s^2, X, Y, Z directions for 3 times
Electrical environment	
Electrical fast transient/ burst immunity	IEC 61000-4-4 2 kV: Power port 1 kV: Signal ports
Electrostatic discharge immunity	Contact discharge method: 6 kV Air discharge method: 8 kV (IEC/EN 61000-4-2 Level 3)

⚠ CAUTION

INOPERATIVE EQUIPMENT

- Do not operate or store the product where chemicals evaporate, or where chemicals are present in the air. Chemicals refer to the following: A) Corrosive chemicals: Acids, alkalines, liquids containing salt, B) Flammable chemicals: Organic solvents.
- Do not allow water, liquids, metal, and wiring fragments to enter the panel case.

Failure to follow these instructions can result in injury or equipment damage.

Structural Specifications

Box Module

Grounding	Functional grounding: Grounding resistance of 100 Ω or less, 2 mm^2 (AWG 14) or thicker wire, or your country's applicable standard (SG and FG are connected inside the product.)
Cooling method	Natural air circulation
External dimensions (W x H x D)	250 x 165 x 37 mm (9.84 x 6.5 x 1.45 in)
Weight	1.7 kg (3.74 lb) or less

Panel Type

12-inch Model

Grounding	Functional grounding: Grounding resistance of 100 Ω or less, 2 mm^2 (AWG 14) or thicker wire, or your country's applicable standard (SG and FG are connected inside the product.)
Cooling method	Natural air circulation
Structure*1	IP66F, IP67F, UL 50/50E, Type 1, Type 4X (indoor use only), Type 12, Type 13 **NOTE:** On the front panel when properly installed in an enclosure and not using the front panel USB port.
External dimensions (W x H x D)	315 × 241 × 67 mm (12.4 x 9.48 x 2.63 in)
Panel cut dimensions (W x H)*2 *3	301.5 x 227.5 mm (11.87 x 8.96 in)
Weight	4.1 kg (9.03 lb) or less

NOTE: Table notes appear at the bottom of the 22-inch Wide Model table.

15-inch Model

Grounding	Functional grounding: Grounding resistance of 100 Ω or less, 2 mm^2 (AWG 14) or thicker wire, or your country's applicable standard (SG and FG are connected inside the product.)
Cooling method	Natural air circulation
Structure*1	IP66F, IP67F, UL 50/50E, Type 1, Type 4X (indoor use only), Type 12, Type 13 **NOTE:** On the front panel when properly installed in an enclosure and not using the front panel USB port.
External dimensions (W x H x D)	397 x 296 x 67 mm (15.63 x 11.65 x 2.63 in)
Panel cut dimensions (W x H)*2 *3	383.5 x 282.5 mm (15.1 x 11.12 in)
Weight	5.4 kg (11.90 lb) or less

NOTE: Table notes appear at the bottom of the 22-inch Wide Model table.

10-inch Wide Model

Grounding	Functional grounding: Grounding resistance of 100 Ω or less, 2 mm^2 (AWG 14) or thicker wire, or your country's applicable standard (SG and FG are connected inside the product.)
Cooling method	Natural air circulation
Structure*1	IP66F, IP67F, UL 50/50E, Type 1, Type 4X (indoor use only), Type 12, Type 13 **NOTE:** On the front panel when properly installed in an enclosure.
External dimensions (W x H x D)	268.5 x 198.5 x 67 mm (10.57 x 7.81 x 2.63 in)
Panel cut dimensions (W x H)*2 *3	255 x 185 mm (10.04 x 7.28 in)
Weight	3.7 kg (8.15 lb) or less

NOTE: Table notes appear at the bottom of the 22-inch Wide Model table.

12-inch Wide Model

Grounding	Functional grounding: Grounding resistance of 100 Ω or less, 2 mm^2 (AWG 14) or thicker wire, or your country's applicable standard (SG and FG are connected inside the product.)
Cooling method	Natural air circulation
Structure*1	IP66F, IP67F, UL 50/50E, Type 1, Type 4X (indoor use only), Type 12, Type 13 **NOTE:** On the front panel when properly installed in an enclosure.
External dimensions (W x H x D)	308.5 x 230.5 x 67 mm (12.15 x 9.07 x 2.63 in)
Panel cut dimensions (W x H)*2 *3	295 x 217 mm (11.61 x 8.54 in)
Weight	4.3 kg (9.5 lb) or less

NOTE: Table notes appear at the bottom of the 22-inch Wide Model table.

15-inch Wide Model

Grounding	Functional grounding: Grounding resistance of 100 Ω or less, 2 mm^2 (AWG 14) or thicker wire, or your country's applicable standard (SG and FG are connected inside the product.)
Cooling method	Natural air circulation
Structure*1	IP66F, IP67F, UL 50/50E, Type 1, Type 4X (indoor use only), Type 12, Type 13 **NOTE:** On the front panel when properly installed in an enclosure.
External dimensions (W x H x D)	408 x 264 x 67 mm (16.06 x 10.39 x 2.63 in)
Panel cut dimensions (W x H)*2 *3	394 x 250 mm (15.51 x 9.84 in)
Weight	5.7 kg (12.56 lb) or less

NOTE: Table notes appear at the bottom of the 22-inch Wide Model table.

19-inch Wide Model

Grounding	Functional grounding: Grounding resistance of 100 Ω or less, 2 mm^2 (AWG 14) or thicker wire, or your country's applicable standard (SG and FG are connected inside the product.)
Cooling method	Natural air circulation
Structure*1	IP66F, IP67F, UL 50/50E, Type 1, Type 4X (indoor use only), Type 12, Type 13 **NOTE:** On the front panel when properly installed in an enclosure.
External dimensions (W x H x D)	463.6 x 293.6 x 69 mm (18.25 x 11.56 x 2.71 in)
Panel cut dimensions (W x H)*2 *3	449.5 x 279.5 mm (17.7 x 11.0 in)
Weight	6.6 kg (14.55 lb) or less

NOTE: Table notes appear at the bottom of the 22-inch Wide Model table.

22-inch Wide Model

Grounding	Functional grounding: Grounding resistance of 100 Ω or less, 2 mm^2 (AWG 14) or thicker wire, or your country's applicable standard (SG and FG are connected inside the product.)
Cooling method	Natural air circulation
Structure*1	IP66F, IP67F, UL 50/50E, Type 1, Type 4X (indoor use only), Type 12, Type 13 **NOTE:** On the front panel when properly installed in an enclosure.
External dimensions (W x H x D)	532.6 x 330.6 x 69 mm (20.97 x 13.02 x 2.71 in)
Panel cut dimensions (W x H)*2 *3	518.5 x 316.5 mm (20.41 x 12.46 in)
Weight	8.2 kg (18.07 lb) or less

*1 The front of this product has been tested to comply with the specified standards when installed in a solid panel. However, it is not intended for use in all environments. In environments where the product is exposed to liquids (including jets and sprays) for extended periods, there is a risk that liquids may enter the product due to causes such as peeling of the protective sheet or damage to the front glass cover. In such environments, implement appropriate protective measures based on the specific conditions. Therefore, prior to installing this product, be sure to confirm the type of conditions that will be present in this product's operating environment.

If the installation gasket is used for a long period of time, or if this product and its gasket are removed from the panel, the original level of protection cannot be kept. To maintain the original protection level, be sure to replace the installation gasket regularly.

*2 For dimensional tolerance, everything +1/-0 mm (+0.04/-0 in) and R in angle are below R3 (R0.12 in).

*3 Even if the installation wall thickness is within the specified range for the Panel Cut Dimensions, depending on wall’s material, size, and installation location of this product and other devices, the installation wall could warp. To prevent warping, the installation surface may need to be strengthened.

NOTICE

EQUIPMENT DAMAGE

- Ensure this product is not in permanent and direct contact with oils.
- Do not press on the display of this product with excessive force or with a hard object.
- Do not press on the touch panel with a pointed object, such as the tip of a mechanical pencil or a screwdriver.

Failure to follow these instructions can result in equipment damage.

NOTICE

EQUIPMENT DAMAGE

Do not expose the device to direct sunlight.

Failure to follow these instructions can result in equipment damage.

NOTICE

STORAGE AND OPERATION OUTSIDE OF SPECIFICATIONS

- Store this product in areas where temperatures are within the product's specifications.
- Do not restrict or block the product's ventilation slots.

Failure to follow these instructions can result in equipment damage.

NOTICE

GASKET AGING

- Inspect the gasket periodically as required by your operating environment.
- Replace the gasket at least once a year, or as soon as scratches or dirt become visible.

Failure to follow these instructions can result in equipment damage.

Functional Specifications

Performance Specifications

CPU	Intel Atom® Processor X Series, x6211E (Dual Core)	Intel Atom® Processor X Series, x6425E (Quad Core)
Base frequency	1.30 GHz	2.0 GHz
Max turbo boost frequency*1	3.00 GHz	
L2 cache	1.5 MB	
Core number	2	4
Thread number	2	4
Main memory	Dual channel DDR4, Up to 3200 MHz (In-Band ECC supported)*2 260-pin DDR4 SO-DIMM socket x 2, (Up to 16 GB/socket, up to 32 GB for 2 sockets)	
Video memory	Shared memory (UMA) Maximum allocation size: Automatic allocation of up to half the installed main memory	
Storage slot	M.2 SSD SATA x 1, M.2 Key B , Type 2242 SATA speed: 6 Gb/s, 3 Gb/s, 1.5 Gb/s	
Expansion slot	—	
Graphics accelerator	Intel® UHD Graphics for 10th Gen Intel® Processors	
Security chip	TPM 2.0	
BIOS	UEFI BIOS	
Operating system	Windows® 10 IoT Enterprise 2021 LTSC (64 bit)	Windows® 10 IoT Enterprise 2021 LTSC (64 bit), Windows® 11 IoT Enterprise 2024 LTSC (64 bit)
Watchdog timer	Timeout setting from 1 to 65,535 seconds is possible (set up using API*3)	
Buzzer	Yes	

*1 To enable Turbo Boost, refer to Turbo Mode, page 126.

*2 For the setting of In-Band ECC, refer to In-Band ECC, page 125.

*3 Refer to API, page 152.

Display Specifications

12-inch and 15-inch

	12-inch	15-inch
Display type	TFT Color LCD	
Display size	12.1"	15"
Resolution	1,024 x 768 pixels (XGA)	
Effective display area (W x H)	245.76 x 184.32 mm (9.68 x 7.26 in)	304.13 x 228.1 mm (11.97 x 8.98 in)
Display colors	16 million colors	
Backlight	White LED (not user replaceable. Please contact your local distributor.)	
Backlight service life	50,000 hours or more (continuous operation at 25 °C [77 °F] before backlight brightness decreases to 50%)	
Brightness control	0...100 (adjusted with touch panel or software)	

10-inch Wide, 12-inch Wide, 15-inch Wide

	10-inch Wide	12-inch Wide	15-inch Wide
Display type	TFT Color LCD		
Display size	10.1"	12.1"	15.6"
Resolution	1,280 x 800 pixels (WXGA)		1,366 x 768 pixels (FWXGA) 1,920 x 1,080 pixels (FHD)
Effective display area (W x H)	216.96 x 135.6 mm (8.54 x 5.34 in)	261.12 x 163.2 mm (10.28 x 6.43 in)	FWXGA: 344.23 x 193.54 mm (13.55 x 7.62 in) FHD: 344.16 x 193.59 mm (13.55 x 7.62 in)
Display colors	16 million colors		
Backlight	White LED (not user replaceable. Please contact your local distributor.)		
Backlight service life	50,000 hours or more (continuous operation at 25 °C [77 °F] before backlight brightness decreases to 50%)		
Brightness control	0...100 (adjusted with touch panel or software)		

19-inch Wide and 22-inch Wide

	19-inch Wide	22-inch Wide
Display type	TFT Color LCD	
Display size	18.5"	21.5"
Resolution	1,920 x 1,080 pixels (FHD)	
Effective display area (W x H)	408.96 x 230.04 mm (16.1 x 9.06 in)	476.64 x 268.11 mm (18.77 x 10.56 in)
Display colors	16 million colors	

	19-inch Wide	22-inch Wide
Backlight	White LED (not user replaceable. Please contact your local distributor.)	
Backlight service life	50,000 hours or more (continuous operation at 25 °C [77 °F] before backlight brightness decreases to 50%)	
Brightness control	0...100 (adjusted with touch panel or software)	

Touch Panel

	12-inch, 15-inch	10-inch Wide, 12-inch Wide, 15-inch Wide, 19-inch Wide, 22-inch Wide
Touch panel type	Resistive film (analog)	Projected capacitive
Touch points	Multi-touch (two-point touch)	Multi-touch (two-point touch)
Touch panel service life	1 million times or more	50 million times or more
Touch panel resolution	1024 x 1024	2048 x 2048
Touch mode	Not applicable	**Standard mode**, **water detection mode**, **glove mode** **NOTE:** For details, refer to Touch Mode, page 134.

Clock

Clock accuracy: ±180 seconds/month (range of error at room temperature and no power)

The product's built-in clock, RTC, has a slight timing error. The range of the error is between +300 and -300 seconds/month, depending on product conditions such as years of use and temperature fluctuations. If you use this product in a system where timing is critical, adjust the clock at regular intervals.

NOTE: The expected battery service life is 5 years; however the battery may die before then. The battery is not user replaceable. Please contact your local distributor.

Interface Specifications

Interfaces

NOTE: Use only the SELV (Safety Extra-Low Voltage) circuit to connect all the interfaces.

Box Module

Serial interface COM	Asynchronous transmission	RS-232C/422/485 (non-isolated) x 2 (default: RS-485)
	Data length	7 or 8 bits
	Stop bit	1 or 2 bits
	Parity	None, odd or even
	Flow control	Hardware flow control: RTS/CTS(RS-232C), ERA/EAB/CSA/CSB(RS-422 HMI mode)*3 Software flow control: Xon/Xoff
	Auto direction control	Always enabled only in RS-485
	Echo cancellation	Supported only in RS-485*3
	Data transmission speed	2,400...115,200 bps
	Connector	D-Sub 9–pin (plug)
USB (Type A) interface	Connector	USB 3.1 Gen1 (Type A) x 2
	Power supply voltage	5 Vdc ±5%
	Maximum current supplied	900 mA/port
	Maximum transmission distance	3 m (9.84 ft)
USB (Type C) interface*1	Connector	USB 3.1 Gen1 (Type C) x 1
	Power supply voltage	5 Vdc ±5%
	Maximum current supplied	1.5 A/port
	Maximum transmission distance	3 m (9.84 ft)
	Resolution	Up to 4,096 x 2,304 pixels at 60 Hz
Ethernet interface	Standard	IEEE1588, 10 BASE-T/ 100 BASE-TX/ 1000BASE-T, Wake-on-LAN (WOL) supported*2
	Connector	Modular jack (RJ-45) x 2
SD card interface	SD card slot (storage) x 1 SDXC UHS-I supported	
DisplayPort	Version	V 1.2, dual mode (DP++) supported
	Resolution	Up to 4,096 x 2,304 pixels at 60 Hz

*1 The USB (Type C) interface supports alternate mode (DisplayPort).

*2 When the status is S4 (hybrid shutdown), Wake-on-LAN is unavailable.

*3 Echo cancellation of the serial interfaces on Box Module is set not to receive the echo (Enabled) as default. For the setting, refer to Settings of Serial Interfaces on Box Module, page 125.

Display Module

		12-inch / 15-inch
USB (Type A) interface	Connector	USB 2.0 (Type A) x 1
	Power supply voltage	5 Vdc ±5%
	Maximum current supplied	500 mA

		12-inch / 15-inch
	Maximum transmission distance	5 m (16.4 ft)

Interface Connection

Cable Connections

⚠ WARNING

EXPLOSION HAZARD

- Always confirm the UL 121201 or CSA C22.2 N°213 hazardous location rating of your device before installing or using it in a hazardous location.
- To apply or remove the supply power from this product installed in a Class I, Division 2 hazardous location, you must either: A) Use a switch located outside the hazardous environment, or B) Use a switch certified for Class I, Division 1 operation inside the hazardous area.
- Do not connect or disconnect equipment unless power has been switched off or the area is known to be non-hazardous. This applies to all connections including power, ground, serial, parallel, and network connections.
- Always use shielded/grounded cables in hazardous locations.
- Use only non-incendive USB devices.

Failure to follow these instructions can result in death, serious injury, or equipment damage.

Division 2 hazardous location regulations require that all cable connections be provided with adequate strain relief and positive interlock. Use only non-incendive USB devices as USB connections do not provide adequate strain relief to allow the use of the USB connections of this product. Never connect or disconnect a cable while power is applied at either end of the cable. All communication cables should include a chassis ground shield. This shield should include both copper braid and aluminum foil. The D-sub style connector housing must be a metal conductive type (for example, molded zinc) and the ground shield braid must be terminated directly to the connector housing. Do not use a shield drain wire.

The outer diameter of the cable must be suited to the inner diameter of the cable connector strain relief so that a reliable degree of strain relief is maintained. Always secure the D-sub connectors to the workstation-mating connectors via the two screws located on both sides.

USB Connection

Non-incendive field wiring apparatus (keyboards, mouse) are permitted for use on the front USB port (Type A) of associated field wiring non-incendive apparatus (this product).

In addition to being non-incendive, any equipment connected to the front USB ports must satisfy the following criteria.

The following figure shows the USB cable wiring (Document No.: NNZ2083601)

<Type A>

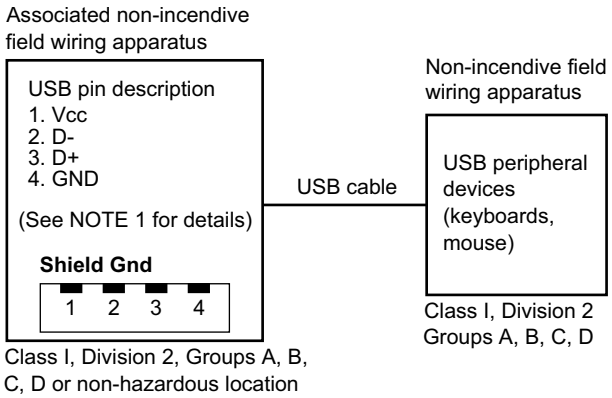

Circuit parameters	Front USB (Type A)
Open-circuit voltage = V_{oc}	5.25 Vdc
Short-circuit current = I_{sc}	1,560 mA
Associated capacitance = C_a	265 µF
Associated inductance = L_a	16 µH

<micro-B>

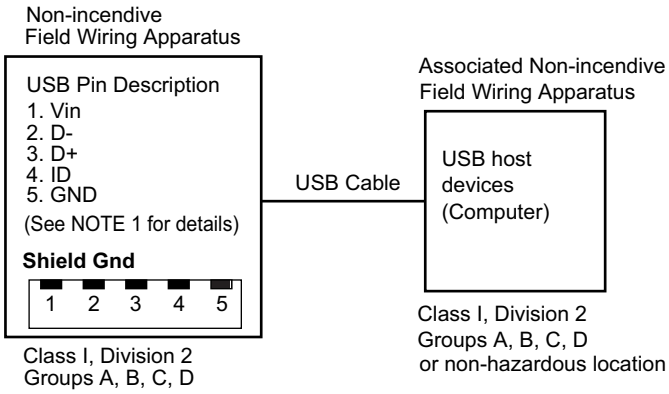

Circuit parameters	Front USB (micro-B)
Maximum input voltage = V_{max}	5.25 Vdc
Maximum load current = I_{max}	0.1 mA
Internal capacitance = C_i	0.12 µF
Internal inductance = L_i	16 µH

NOTE:

1. The above tables list the non-incendive circuit parameters.

The Entity Concept allows interconnection of non-incendive apparatus with associated apparatus – not specifically examined combinations – as a system when the approved values of V_{oc} (or U_o) and I_{sc} (or I_o) for the associated apparatus are less than or equal to Vmax (U_i) and Imax (I_i) for the non-incendive apparatus, and the approved values of C_a (C_o) and L_a (L_o) for the associated apparatus are greater than or equal to $C_i + C_{cable}$ and $L_i + L_{cable}$, respectively, for the non-incendive field wiring apparatus.

2. Associated non-incendive field wiring apparatus and non-incendive field wiring apparatus shall satisfy the following:

Associated non-incendive field wiring apparatus	—	Non-incendive field wiring apparatus
V_{oc}	≤	V_{max}
I_{sc}	≤	I_{max}
C_a	≥	$C_i + C_{cable}$
L_a	≥	$L_i + L_{cable}$

3. If the electrical parameters of the cable are unknown, the following values may be used:

C_{cable} = 196.85 pF/m (60 pF/ft)

L_{cable}= 0.656 µH/m (0.20 µH/ft)

4. Wiring methods must be in accordance with the electrical code of the country where it is used.

This product must be installed in an enclosure. If installed in a Class I, Division 2 location, the enclosure must be capable of accepting one or more Division 2 wiring methods.

⚠ WARNING

EXPLOSION HAZARD

- Verify the power, input, and output (I/O) wiring are in accordance with Class I, Division 2 wiring methods.
- Do not use this product in hazardous environments or locations other than Class I, Division 2, Groups A, B, C, and D.
- Substitution of any components may impair suitability for Class I, Division 2.
- Do not disconnect equipment while the circuit is live or unless the area is known to be free of ignitable concentrations.
- Remove power before attaching or detaching any connectors to or from this product.
- Ensure that power, communication, and accessory connections do not place excessive stress on the ports. Consider the vibration in the environment when making this determination.
- Securely attach power, communication, and external accessory cables to the panel or cabinet.
- Use only commercially available USB cables.
- Use only non-incendive USB configurations.
- Confirm that the USB cable has been attached with the USB cable clamp before using the USB interface.

Failure to follow these instructions can result in death, serious injury, or equipment damage.

Serial Interface (COM on Box Module)

Introduction

The serial interface is not isolated. The SG (signal ground) and FG (frame ground) terminals are connected inside this product. When the serial interface connector is D-Sub, connect the FG wire to the shell.

⚠⚠DANGER

ELECTRIC SHOCK AND FIRE

When using the SG terminal to connect an external device to this product:

- Verify that a ground loop is not created when you set up the system.
- Connect the SG terminal to remote equipment when the external device is not isolated.
- Connect the SG terminal to a known reliable ground connection to reduce the risk of damaging the circuit.

Failure to follow these instructions will result in death or serious injury.

⚠CAUTION

LOSS OF COMMUNICATION

- Do not put excessive stress on the communication ports of all connections.
- Securely attach communication cables to the panel wall or cabinet.
- Use a D-Sub 9 pin connector that has jack screws.

Failure to follow these instructions can result in injury or equipment damage.

NOTE: Use within the rated current.

RS-232C

D-Sub 9 pin plug connector

Product side:

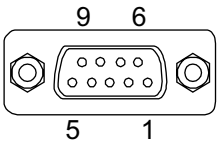

Pin No.	RS-232C		
	Signal name	**Direction**	**Description**
1	CD	Input	Carrier detect
2	RD (RXD)	Input	Receive data
3	SD (TXD)	Output	Send data
4	ER (DTR)	Output	Data terminal ready
5	SG	-	Signal ground (not isolated)
6	DR (DSR)	Input	Data set ready
7	RS (RTS)	Output	Request to send
8	CS (CTS)	Input	Send possible

Pin No.	RS-232C		
	Signal name	**Direction**	**Description**
9	CI (RI)	Input	Called status display
Shell	FG	-	Frame ground (common with SG)

Recommended jack screw is #4-40 (UNC).

RS-422/485

D-Sub 9 pin plug connector

Product side:

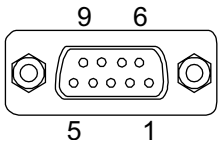

Pin No.	RS-422/485		
	Signal name	**Direction**	**Description**
1	RDA	Input	Receive data A (+)
2	RDB	Input	Receive data B (+)
3	SDA	Output	Send data A (+)
4	ERA*1	Output	Data terminal ready A (+)
5	SG	-	Signal ground (not isolated)
6	CSB*1	Input	Send possible B (-)
7	SDB	Output	Send data B (-)
8	CSA*1	Input	Send possible A (+)
9	ERB*1	Output	Data terminal ready B (-)
Shell	FG	-	Frame ground (common with SG)

*1 In RS-422, these control signals are available only when HMI mode is selected in UEFI BIOS. Refer to Settings of Serial Interfaces on Box Module, page 125.

Recommended jack screw is #4-40 (UNC).

Dimensions

What's in This Chapter

Basic Box 43
Panel Type - Basic Model 45
Installation Fastener 49

Basic Box

External Dimensions

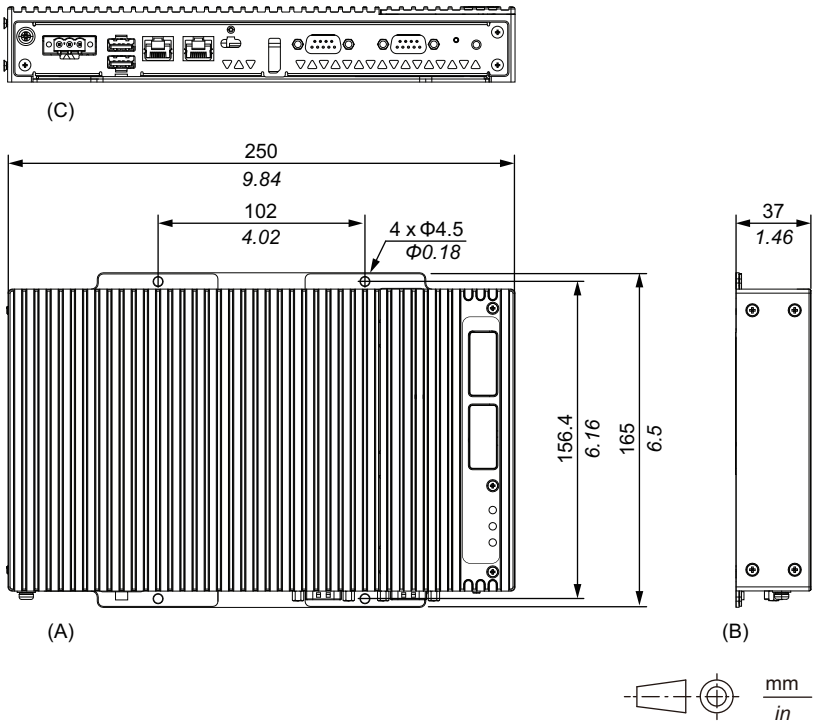

A. Front
B. Left
C. Bottom

Dimensions with Book Mount Adapter

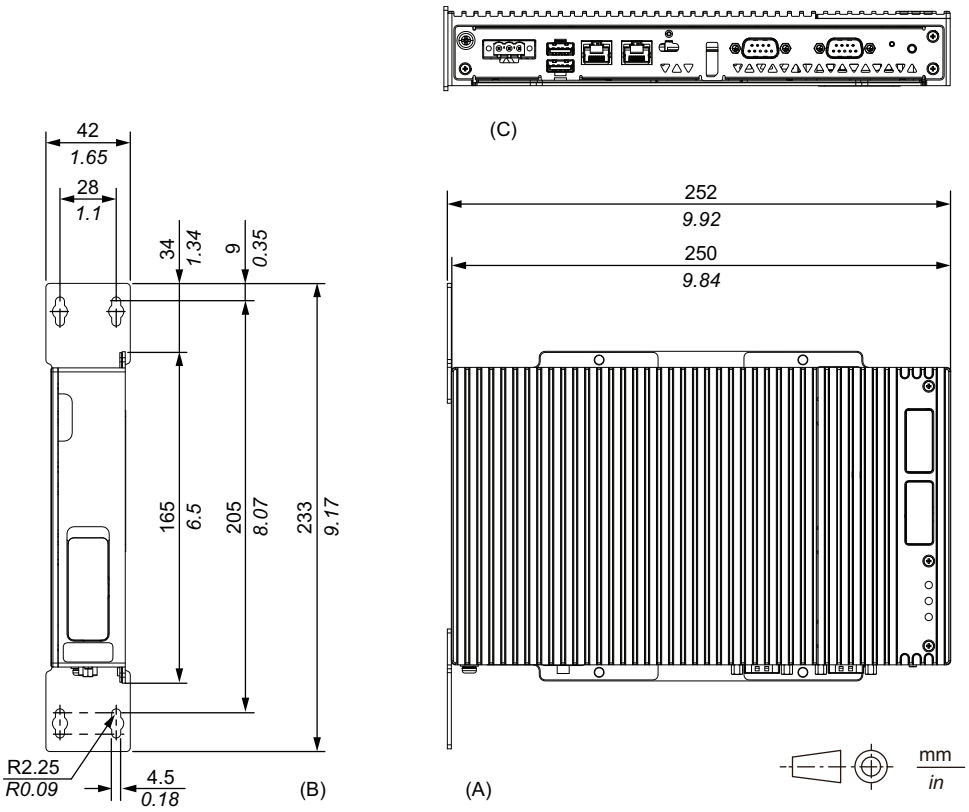

A. Front
B. Right
C. Bottom

Panel Type - Basic Model

12-inch Basic Model

External Dimensions

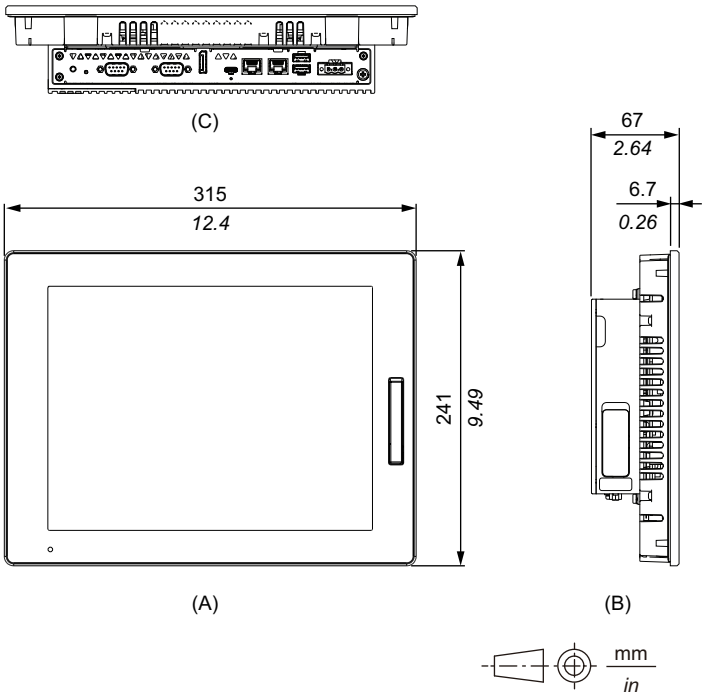

A. Front
B. Left
C. Bottom

15-inch Basic Model

External Dimensions

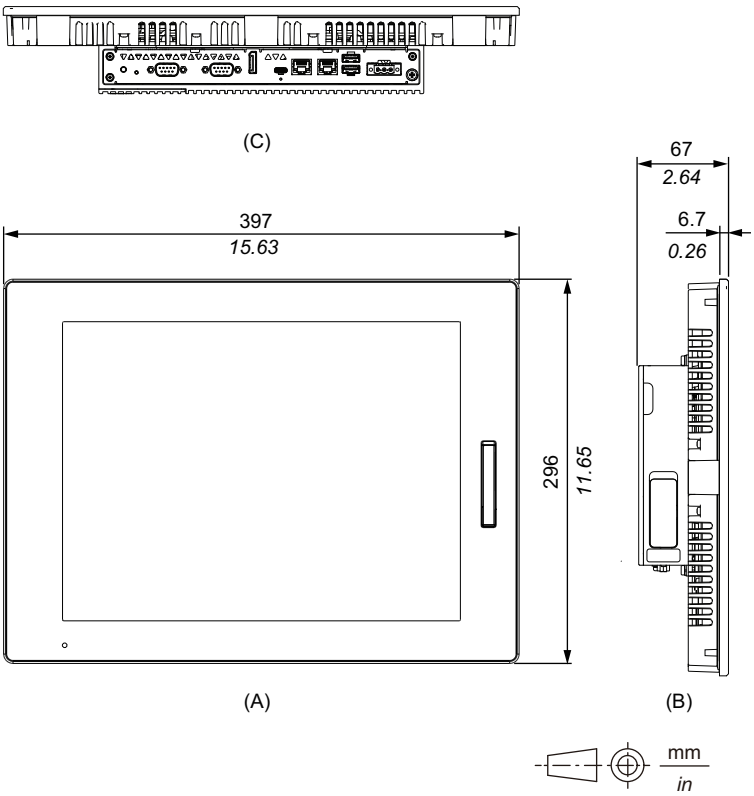

A. Front
B. Left
C. Bottom

10-inch Wide Basic Model

External Dimensions

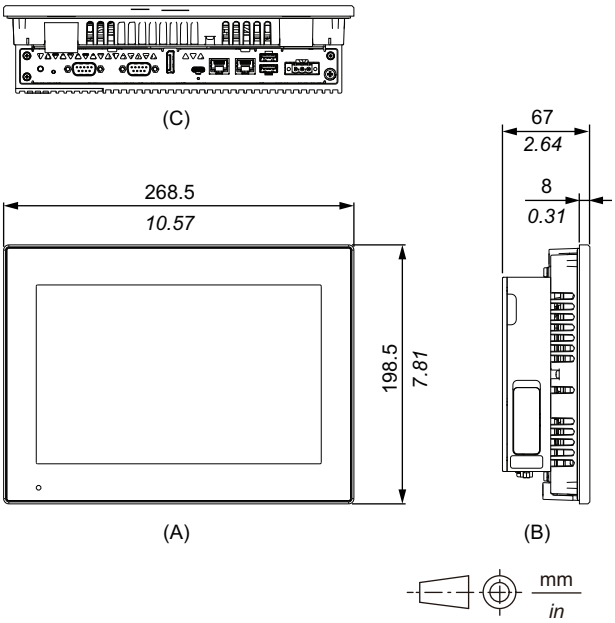

A. Front

B. Left
C. Bottom

12-inch Wide Basic Model

External Dimensions

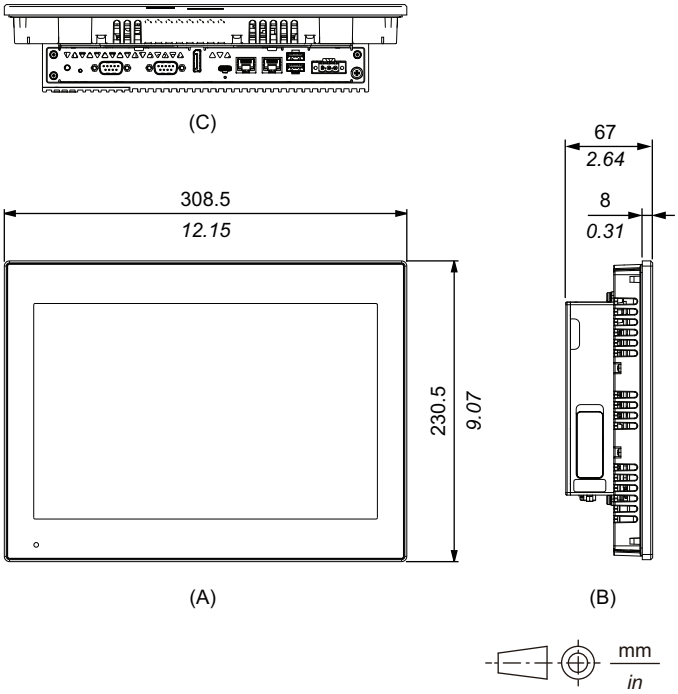

A. Front
B. Left
C. Bottom

15-inch Wide Basic Model

External Dimensions

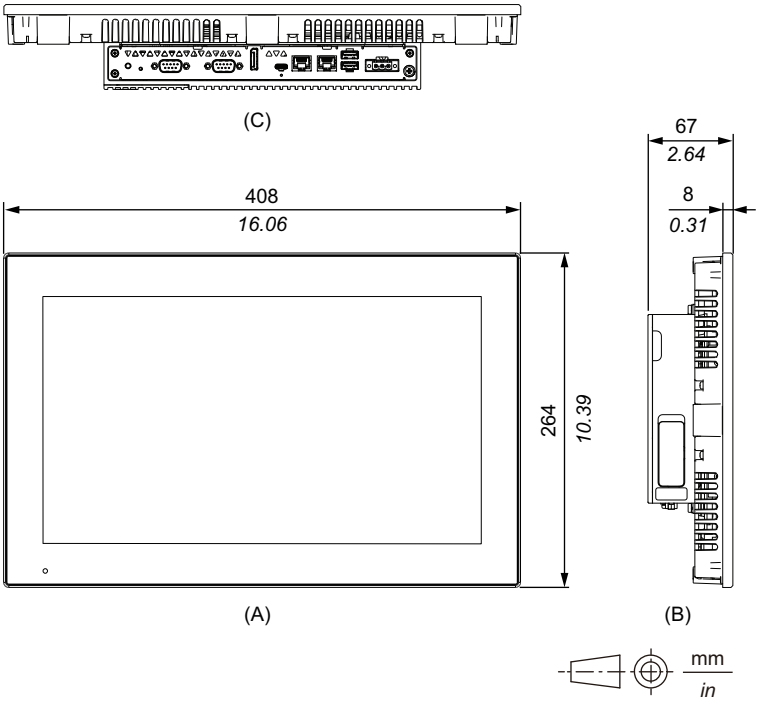

A. Front
B. Left
C. Bottom

19-inch Wide Basic Model

External Dimensions

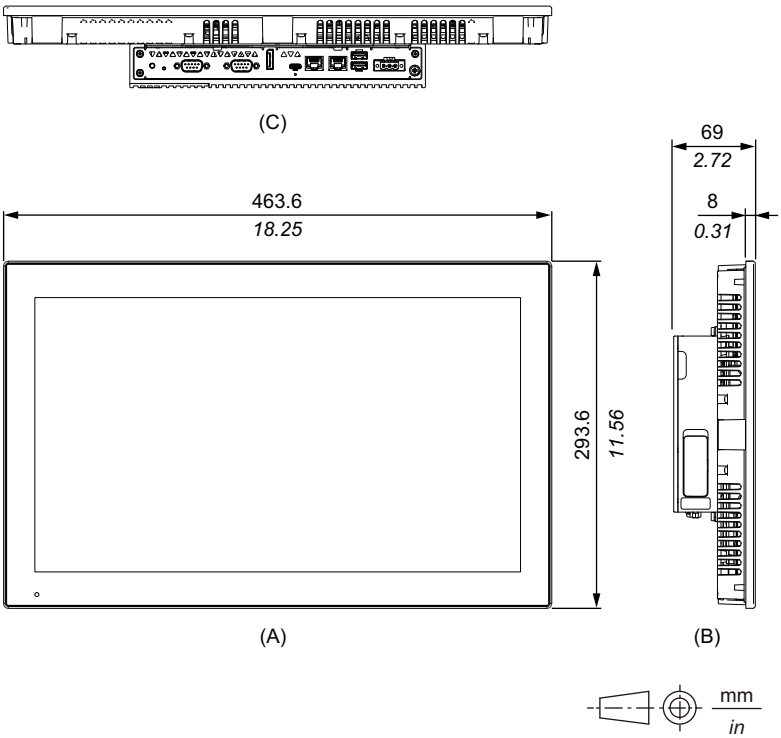

A. Front

B. Left
C. Bottom

22-inch Wide Basic Model

External Dimensions

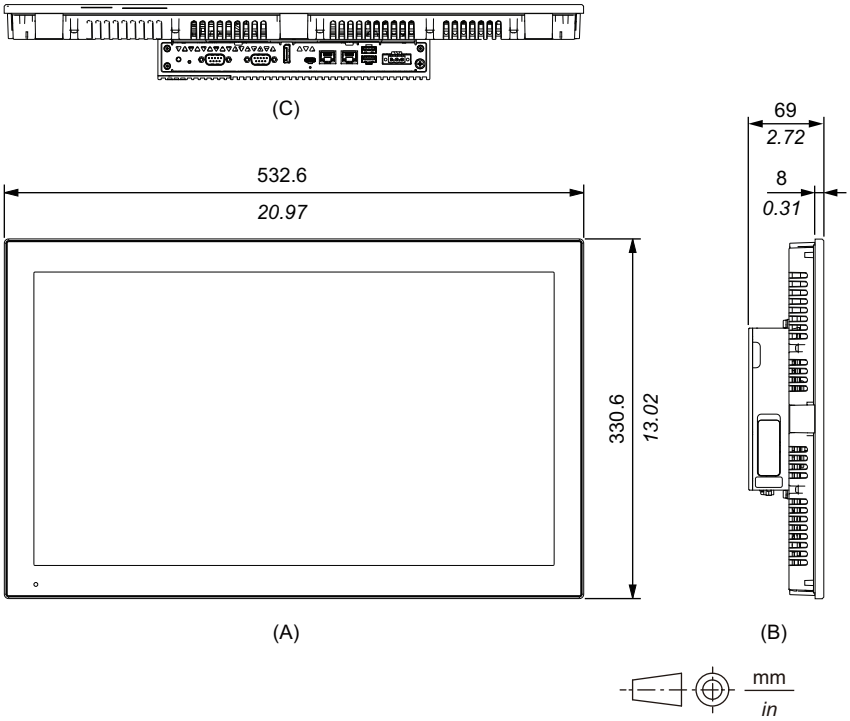

A. Front
B. Left
C. Bottom

Installation Fastener

External Dimensions

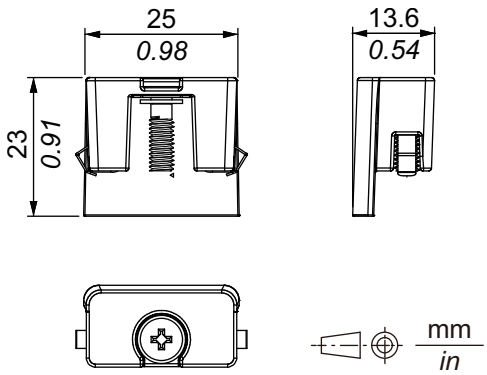

Installation and Wiring

What's in This Chapter

Installation Requirements 50
Box Module Installation 52
Panel Type Installation 56
Wiring the Power Supply 61
M.2 SSD Installation 65
SD Card Installation 72
Memory Installation 77
Optional Interface Installation 80
USB Type A/Type C Cable Clamp 112
Front USB Cover 114

Installation Requirements

This product is designed for use on flat surfaces of UL 50/50E, Type 1, Type 4X (indoor use only), Type 12 or Type 13 enclosure.

Mount this product in an enclosure that provides a clean, dry, robust and controlled environment (IP66F, IP67F, UL 50/50E, Type 1, Type 4X [indoor use only], Type 12 or Type 13 enclosure).

The front surface of displays is rated for IP66F, IP67F, UL 50/50E, Type 1, Type 4X (indoor use only), Type 12 and Type 13 enclosure.

Display front surface	Enclosure front surface
IP66F, IP67F, UL 50/50E, Type 1, Type 4X (indoor use only), Type 12, Type 13	IP66F, IP67F, UL 50/50E, Type 1, Type 4X (indoor use only), Type 12, Type 13

When the front USB cover is open, the front surface is rated for Type 1 enclosure.

Be aware of the following when building this product into an end-use product:

- The rear face of this product is not approved as an enclosure. When building this product into an end-use product, be sure to use an enclosure that satisfies standards as the end-use product's overall enclosure.
- Install this product in an enclosure with mechanical rigidity.
- This product is an open type device and not designed for outdoor use. UL certification obtained is for indoor use only.
- Install and operate this product with its front panel facing outward.

NOTE: IP66F and IP67F are not part of UL certification.

⚠ CAUTION

RISK OF BURNING INJURY

- Do not touch the bezel or rear chassis during operation.
- Wear appropriate gloves when operating the front USB in ambient temperatures greater than 45 °C (113 °F).

Failure to follow these instructions can result in injury or equipment damage.

- **Box Module:**
  Depending on the panel's material and design, the panel's installation surface may need to be strengthened. If high levels of vibration are expected and this product's installation surface can move (such as because of a panel door opening or closing), due consideration should be given to this product's weight.

  Panel Type:
  Check that the installation wall or cabinet surface is flat, in good condition and has no jagged edges. Metal reinforcing strips may be attached to the inside of the wall, near the panel-cut, to increase its rigidity.
- **Box Module:**
  Determine the thickness of the panel in consideration of its material and strength as well as the environment in which this product is used. The thickness must be 1.6 mm (0.06 in) or more, considering the length of M4 screws.

  Panel Type:
  Decide on the thickness of the enclosure wall, based on the level of strength required. Even if the installation wall thickness is within the recommended range for the Panel Cut Dimensions, depending on wall's material, size, and installation location of this product and other devices, the installation wall could warp. To prevent warping, the installation surface may need to be strengthened.
- Check that the ambient air temperature and the ambient humidity are within their specified ranges in Environmental Specifications, page 29. When installing this product in a cabinet or enclosure, the ambient air temperature is the cabinet's or enclosure's internal and external temperature.

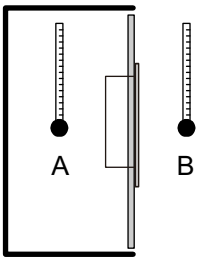

A. Internal temperature

B. External temperature

- Be sure that heat from surrounding equipment does not cause this product to exceed its standard operating temperature.
- When mounting Panel Type in portrait orientation, ensure that the right side of this product faces up. In other words, the power connector should be at the top. For the Box Module, see Box Module Installation, page 52.

  NOTE: Please make sure your applications support portrait orientation of the display.

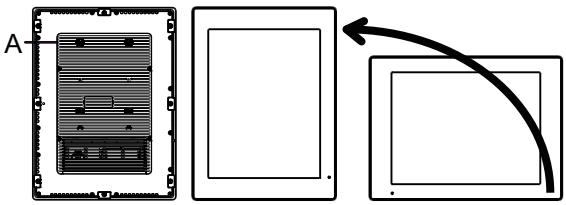

A. Power connector

- When installing this product in a slanted position, the product face should not incline more than 30°.

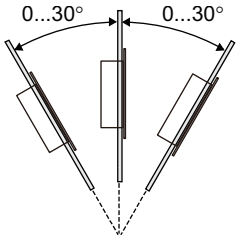

- For easier maintenance, operation and improved ventilation, install this product at least 100 mm (3.94 in) away from adjacent structures and other equipment as shown in the following illustration:

  NOTE: Ensure that you have enough space to insert and remove the storage card.

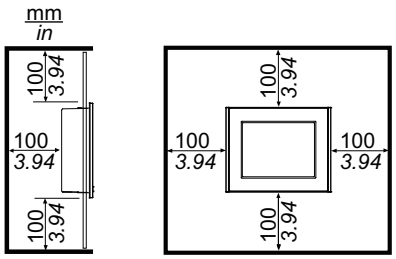

Pressure Differences

When applying and installing this product, it is important that steps are taken to eliminate any pressure difference between the inside and the outside of the enclosure in which this product is mounted. Higher pressure inside the enclosure can cause delamination of the front membrane of the display. Even a small pressure difference inside the enclosure will act on the large area of the membrane and can result in sufficient force to delaminate the membrane and thus cause failure of the touch capability. Pressure differences can often occur in applications where there are multiple fans and ventilators moving air at different rates in different rooms. Please follow these techniques to ensure that this product's function is not impacted by this mis-application:

1. Seal all conduit connections inside of the enclosure, especially those that lead to other rooms that may be at a different pressure.
2. Where applicable, install a small weep hole at the bottom of the enclosure to allow equalization of the internal and external pressure.

Box Module Installation

Introduction

You can use the following methods to install the box module.

- Wall mounting
- Flat mounting
- Book mounting

Each installation method is described below.

NOTE:

- Depending on the panel's material and design, the panel's installation surface may need to be strengthened. If high levels of vibration are expected and this product's installation surface can move (such as because of a panel door opening or closing), due consideration should be given to this product's weight.
- Determine the thickness of the panel in consideration of its material and strength as well as the environment in which this product is used. The thickness must be 1.6 mm (0.06 in) or more, considering the length of M4 screws.
- There is a decal attached to the rear face of the Box Module. Do not remove this decal; otherwise, the Box Module will not function properly.

⚠⚠DANGER

HAZARD OF ELECTRIC SHOCK, EXPLOSION, OR ARC FLASH

- Remove all power from the device before removing any covers or elements of the system, and prior to installing or removing any accessories, hardware, or cables.
- Unplug the power cable from both this product and the power supply prior to installing or removing the product.
- Always use a properly rated voltage sensing device to confirm power is off where and when indicated.
- Replace and secure all covers or elements of the system before applying power to this product.
- Use only the specified voltage when operating this product. This product is designed to use 12 to 24 Vdc. Always check whether your device is DC powered before applying power.
- When using this product in Class I, Division 2, Groups A, B, C, and D hazardous locations, install this product in an enclosure that prevents the operator from touching the back of this product without the use of tools.

Failure to follow these instructions will result in death or serious injury.

⚠CAUTION

RISK OF INJURY

- Hold this product in place after removing the screws.
- Use both hands.

Failure to follow these instructions can result in injury or equipment damage.

NOTICE

EQUIPMENT DAMAGE

- Always use the installation gasket.
- Keep this product stabilized while you are installing or removing the screws.

Failure to follow these instructions can result in equipment damage.

NOTICE

BROKEN ENCLOSURE

Do not exert more torque than the amount specified.

Failure to follow these instructions can result in equipment damage.

Wall Mounting

Install the product to the panel or wall with M4 screws (4 pieces).

NOTE:

- The necessary torque is 1.5 N•m (13.3 lb-in).
- With this installation method, the interface side (the bottom of the product) must be facing downward.
- To prevent abnormally high temperatures from occurring inside the product, mount the product completely vertically.

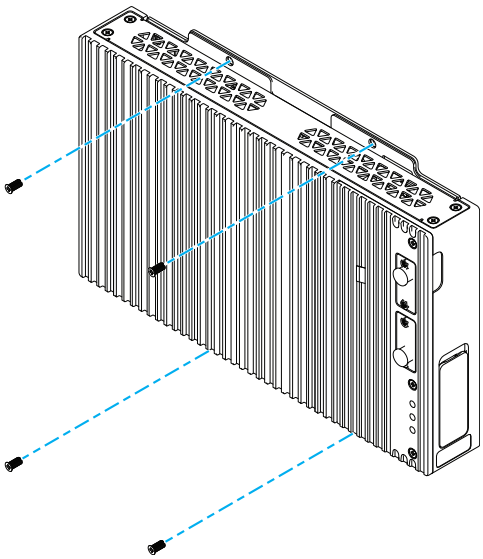

Flat Mounting

Install the product to the panel or wall with M4 screws (4 pieces).

NOTE:

- The necessary torque is 1.5 N•m (13.3 lb-in).
- With this installation method, the heat sink must be facing upward.
- To prevent abnormally high temperatures from occurring inside the product, mount the product completely horizontally.

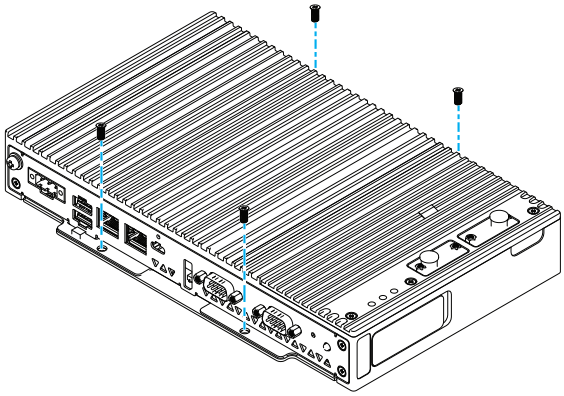

Book Mounting

Book mounting requires an optional book mount adapter.

Book mount adapter for Basic Box: HMIYP6ADBMB

Installation procedure

1. When attaching the side of the Box Module to the panel, use A.

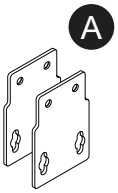

2. Remove the screws attached to the product (4 pieces), then fix the book mount adapter with the screws to attach it to the product.

   NOTE:

   - The necessary torque is 0.7 N•m (6.2 lb-in).
   - For the external dimensions of the Box Module with the book mount adapter, refer to Dimensions with Book Mount Adapter, page 44

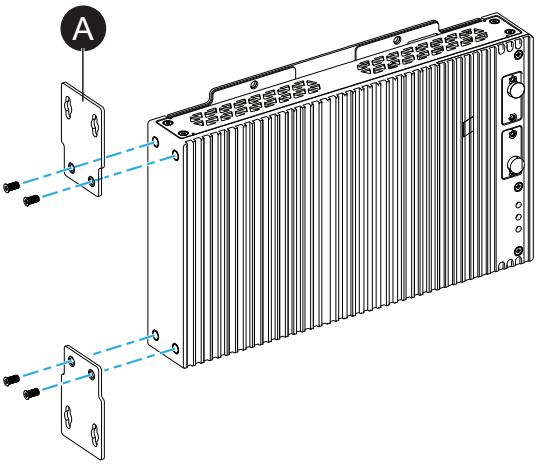

3. Install the product to the panel or wall with M4 screws (4 pieces).

   NOTE:

   - The necessary torque is 1.5 N•m (13.3 lb-in).
   - When installing on the side of the product, the interface side (the bottom of the product) must be facing downward.
   - To prevent abnormally high temperatures from occurring inside the product, mount the product completely vertically.

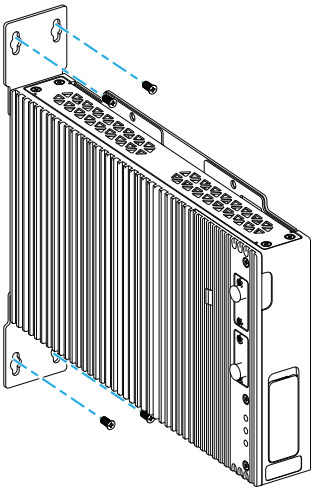

Panel Type Installation

Panel Cut Dimensions

Based on the panel cut dimensions, open a mount hole on the panel.

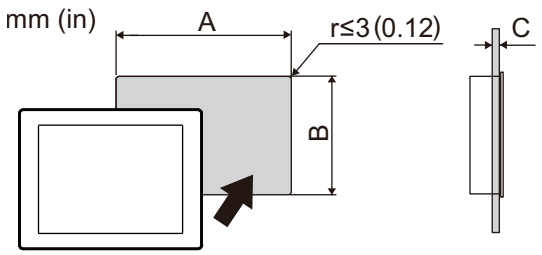

Model Name		
A	**B**	**C**
12-inch		
301.5 mm (+1/-0 mm) (11.87 in [+0.04/-0 in])	227.5 mm (+1/-0 mm) (8.96 in [+0.04/-0 in])	1.6...5 mm (0.06...0.2 in)
15-inch		
383.5 mm (+1/-0 mm) (15.1 in [+0.04/-0 in])	282.5 mm (+1/-0 mm) (11.12 in [+0.04/-0 in])	1.6...5 mm (0.06...0.2 in)
10-inch Wide		
255 mm (+1/-0 mm) (10.04 in [+0.04/-0 in])	185 mm (+1/-0 mm) (7.28 in [+0.04/-0 in])	1.6...3 mm (0.06...0.12 in)
12-inch Wide		
295 mm (+1/-0 mm) (11.61 in [+0.04/-0 in])	217 mm (+1/-0 mm) (8.54 in [+0.04/-0 in])	1.6...5 mm (0.06...0.2 in)
15-inch Wide		
394 mm (+1/-0 mm) (15.51 in [+0.04/-0 in])	250 mm (+1/-0 mm) (9.84 in [+0.04/-0 in])	1.6...5 mm (0.06...0.2 in)
19-inch Wide		
449.5 mm (+1/-0 mm) (17.7 in [+0.04/-0 in])	279.5 mm (+1/-0 mm) (11.0 in [+0.04/-0 in])	1.6...5 mm (0.06...0.2 in)
22-inch Wide		
518.5 mm (+1/-0 mm) (20.41 in [+0.04/-0 in])	316.5 mm (+1/-0 mm) (12.46 in [+0.04/-0 in])	1.6...5 mm (0.06...0.2 in)

Installation Procedure

⚠⚠DANGER

HAZARD OF ELECTRIC SHOCK, EXPLOSION, OR ARC FLASH

- Remove all power from the device before removing any covers or elements of the system, and prior to installing or removing any accessories, hardware, or cables.
- Unplug the power cable from both this product and the power supply prior to installing or removing the product.
- Always use a properly rated voltage sensing device to confirm power is off where and when indicated.
- Replace and secure all covers or elements of the system before applying power to this product.
- Use only the specified voltage when operating this product. This product is designed to use 12 to 24 Vdc. Always check whether your device is DC powered before applying power.
- When using this product in Class I, Division 2, Groups A, B, C, and D hazardous locations, install this product in an enclosure that prevents the operator from touching the back of this product without the use of tools.

Failure to follow these instructions will result in death or serious injury.

NOTICE

EQUIPMENT DAMAGE

Keep this product stabilized in the panel cut while you are installing or removing the screw fasteners.

Failure to follow these instructions can result in equipment damage.

NOTICE

BROKEN ENCLOSURE

Do not exert more torque than the amount specified.

Failure to follow these instructions can result in equipment damage.

1. Check that the gasket is seated securely into the bezel's groove, which runs around the perimeter of the display panel frame.

   NOTE: Always use the installation gasket, since it absorbs vibration in addition to repelling water. For the procedure on replacing the installation gasket, refer to Replacing the Installation Gasket, page 119.

2. Based on the Panel Cut Dimensions, page 56, open a mount-hole on the panel and attach the Panel Type to the panel from the front side.

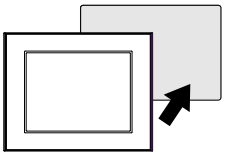

3. Confirm that the anti-drop lock on the top of the Panel Type is attached to the panel.

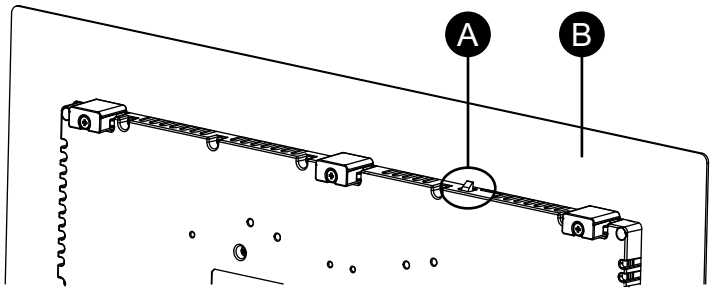

A. Anti-drop lock

B. Panel

4. Insert the installation fasteners into the bracket openings at the top, bottom, left and right, and use a screwdriver to tighten the screws little by little, alternating between diagonally-positioned screws.

NOTE: The necessary torque is 0.7 N•m (6.2 lb-in).

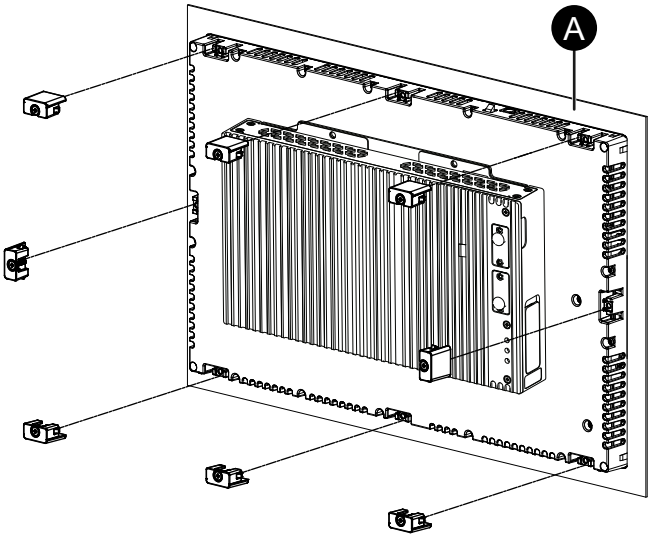

A. Panel

The number of installation fasteners for each Panel Type is as follows.

12-inch, 10-inch Wide, 12-inch Wide	Top - 2, Bottom - 2
15-inch, 15-inch Wide, 19-inch Wide, 22-inch Wide	Top - 3, Bottom - 3, Left - 1, Right - 1

Removal Procedure

⚠⚠DANGER

HAZARD OF ELECTRIC SHOCK, EXPLOSION, OR ARC FLASH

- Remove all power from the device before removing any covers or elements of the system, and prior to installing or removing any accessories, hardware, or cables.
- Unplug the power cable from both this product and the power supply prior to installing or removing the product.
- Always use a properly rated voltage sensing device to confirm power is off where and when indicated.
- Replace and secure all covers or elements of the system before applying power to this product.
- Use only the specified voltage when operating this product. This product is designed to use 12 to 24 Vdc. Always check whether your device is DC powered before applying power.

Failure to follow these instructions will result in death or serious injury.

⚠CAUTION

RISK OF INJURY

Do not drop this product when you remove it from the panel.

- Hold this product in place after removing the fasteners.
- Use both hands.
- While pushing on the anti-drop lock, be careful not to hurt your fingers.

Failure to follow these instructions can result in injury or equipment damage.

NOTICE

EQUIPMENT DAMAGE

Keep this product stabilized in the panel cut while you are installing or removing the screw fasteners.

Failure to follow these instructions can result in equipment damage.

NOTICE

EQUIPMENT DAMAGE

Remove this product while pushing the anti-drop lock or by making sure the lock does not touch the panel.

Failure to follow these instructions can result in equipment damage.

1. Using a screwdriver, gradually loosen the screws for the fasteners (top, bottom, left, and right), alternating diagonally between screws until all screws are loose.

   NOTE: For the number of installation fasteners on your model, see Number of Installation Fasteners in step 4 of Installation Procedure, page 57.

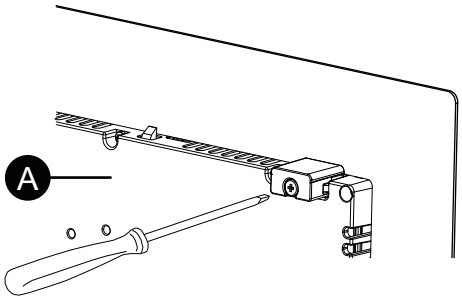

   A. Rear side

2. While pushing on the anti-drop lock on the top of the Panel Type, slowly remove the Panel Type from the panel.

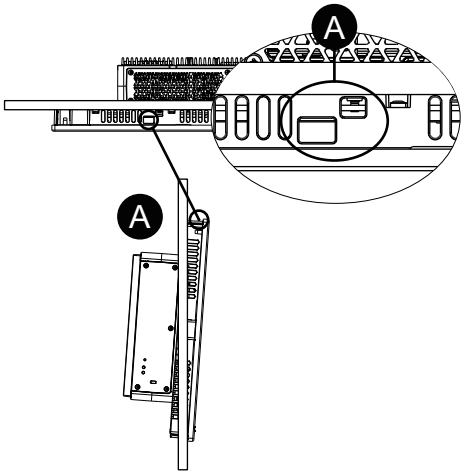

   A. Anti-drop lock

Wiring the Power Supply

DC Power Cord Preparation

⚠⚠DANGER

HAZARD OF ELECTRIC SHOCK, EXPLOSION, OR ARC FLASH

- Remove all power from the device before removing any covers or elements of the system, and prior to installing or removing any accessories, hardware, or cables.
- Remove power before wiring this product’s power terminals.
- Always use a properly rated voltage sensing device to confirm power is off where and when indicated.
- Replace and secure all covers or elements of the system before applying power to this product.
- Use only the specified voltage when operating this product. This product is designed to use 12 to 24 Vdc. Always check whether your device is DC powered before applying power.
- Since this product is not equipped with a power switch, be sure to connect a power switch to the power supply.
- Be sure to ground this product's FG terminal.

Failure to follow these instructions will result in death or serious injury.

NOTE:

- The SG (signal ground) and FG (frame ground) terminals are connected internally in this product.
- When the FG terminal is connected, be sure the wire is grounded. Not grounding this product can result in excessive electromagnetic interference (EMI).

- Make sure the ground wire is either the same or heavier gauge than the power wires.
- Do not use aluminum wires in the power supply's power cord.
- If the ends of the individual wires are not twisted correctly, the wires may create a short circuit. When inserting a wire into the connector, hold down the opening button and insert the wire while the internal spring is depressed. Alternatively, you can crimp and insert either a pin terminal or ferrule terminal.
- The conductor type is solid or stranded wire.
- Use copper wire rated for 75 °C (167 °F) or higher.
- Use the SELV (Safety Extra-Low Voltage) circuit and LIM (Limited Energy) circuit for DC input.

DC power cord	
Recommended cross section	0.75...3.5 mm^2 (18...12 AWG)[*1]
Conductor type	Solid or stranded wire[*2]
Conductor length	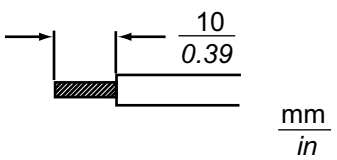

[*1] In case of providing 12 Vdc input, thick wires are recommended to minimize voltage drops in the wire.

*2 When using stranded wires, confirm the allowable current of the wire.

DC grounding wire	
Recommended cross section	2 mm² or more (14 AWG or greater)
Ring terminal size*1	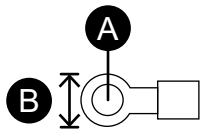 A. Φ4.3 mm (0.17 in) or more B. 7.2 mm (0.28 in) or less

*1 To prevent a short circuit caused by loose screws, use a crimp-type terminal with an insulating sleeve.

Connecting the DC Power Cord

DC Power Connector: Spring Clamp Terminal Blocks

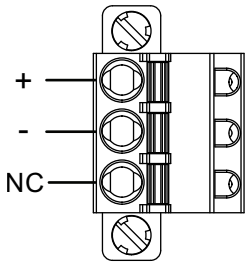

Connection	Wire
+	12...24 Vdc
-	0 Vdc
NC	No connection

How to connect the DC Power Cord

1. Loosen the screw on the FG terminal of the product, connect the grounding wire, and tighten the screw.

   NOTE:

   - The necessary torque is 1.5 N•m (13.3 lb-in).
   - If the wire is not connected to the FG terminal properly, touch may not respond normally.

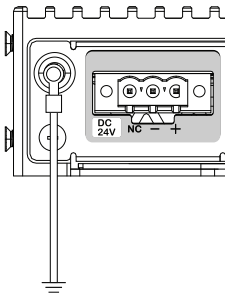

2. Confirm the power cord is not connected to the power supply.
3. Crimp a pin terminal properly to the end of each power cable wire.
4. Push the opening button with a small and flat screwdriver to open the desired pin hole.

5. Insert each power cord wire into its corresponding hole. Release the opening button to clamp the wire in place.

   NOTE:

   - When using stranded wire, do not short with neighboring wires.
   - When connecting with stranded wires, do not solder the stranded wires.

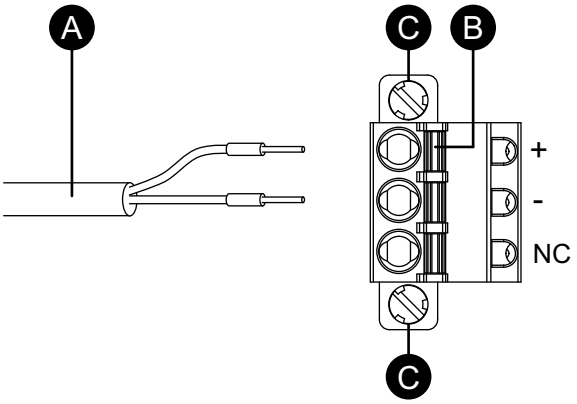

   A. Power cord
   B. Opening button
   C. Screw

6. After inserting all two power cord wires, insert the DC power connector into the power connector on this product.
7. Affix the screws on both sides of the connector.

   NOTE: The necessary torque is 0.3 N•m (2.7 lb-in).

Power Supply Precautions

⚠ DANGER

SHORT CIRCUIT, FIRE, OR UNINTENDED EQUIPMENT OPERATION

- Install and fasten this product in an installation panel or cabinet prior to connecting power supply and communication lines.
- Securely attach power cables to an installation panel or cabinet.
- Avoid excessive force on the power cable.

Failure to follow these instructions will result in death or serious injury.

- This product's power cord should not be bundled with or kept close to main circuit lines (high voltage, high current), power lines, or input/output lines, and their various systems should be kept separate. When power lines cannot be wired via a separate system, use shielded cables for input/output lines.
- An independent DC power supply is recommended for this product. (The DC power supply should be located close to the product, with twisted pair cabling as short as possible.)
- To increase noise resistance, attach a ferrite core to the power cable.

Power Supply Connections

- If the voltage variation is outside the prescribed range, connect a regulated power supply.

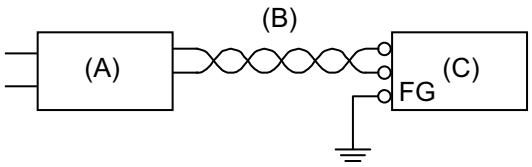

A. Regulated power supply
B. Twisted-pair cord
C. This product

- The Vin- and SG (signal ground) / FG (functional ground) terminals are connected internally in this product. If the 0 Vdc output of the DC power supply is grounded, a ground loop may be formed, causing the return current of the power supply to flow through the FG path. It is recommended to design the system so that ground loops are not created, for example by ensuring that the DC power supply output is not grounded.

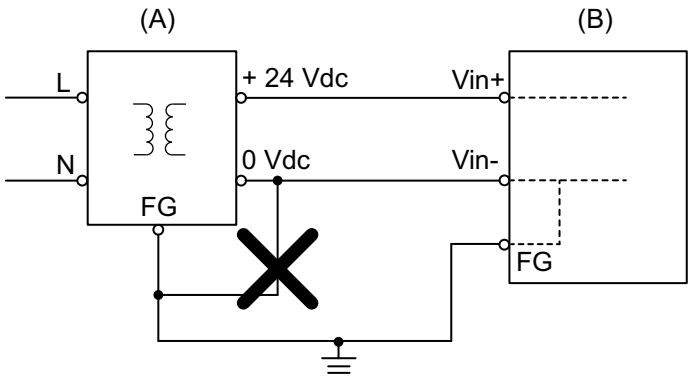

A. DC power supply
B. This product

Grounding

Independent Grounding

Always ground the FG (functional ground) terminal. Be sure to separate this product from the FG of other devices as shown below.

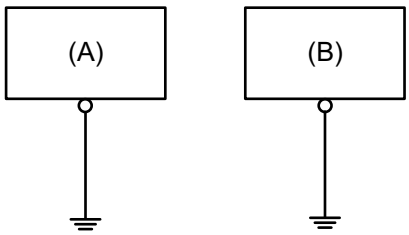

A. This product
B. Other equipment

Precautions

- Check that the grounding resistance is 100 Ω or less.[*1]
- The FG wire should have a cross sectional area 2 mm^2 (AWG14) or greater[*1]. Create the connection point as close as possible to this product, and make the wire as short as possible. When using a long grounding wire, replace the thin wire with a thicker wire, and place it in a duct.
- The SG (signal ground) and FG (functional ground) terminals are connected internally in this product. When connecting the SG line to another device, be sure that no ground loop is formed.

[*1] Observe local codes and standards.

Common Grounding

Electromagnetic Interference (EMI) can be created if devices are improperly grounded. EMI can cause loss of communication. If independent grounding is not possible, use a common grounding point as shown in the configuration below. Do not use any other configuration for common grounding.

Correct grounding

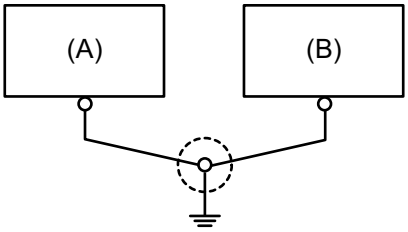

A. This product
B. Other equipment

Incorrect grounding

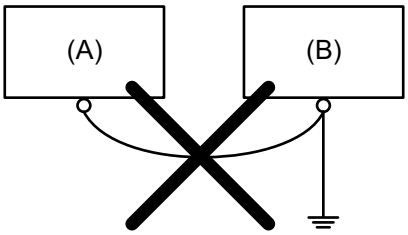

A. This product
B. Other equipment

M.2 SSD Installation

Introduction

The following describes how to install the M.2 SSD card. The size of the M.2 SSD card conforms to Type 2242.

Replacing M.2 SSD for Main Storage

⚠⚠DANGER

HAZARD OF ELECTRIC SHOCK, EXPLOSION, OR ARC FLASH

- Remove all power from the device before removing any covers or elements of the system, and prior to installing or removing any accessories, hardware, or cables.
- Unplug the power cable from both this product and the power supply prior to installing or removing the product.
- Always use a properly rated voltage sensing device to confirm power is off where and when indicated.
- Replace and secure all covers or elements of the system before applying power to this product.
- Use only the specified voltage when operating this product. This product is designed to use 12 to 24 Vdc. Always check whether your device is DC powered before applying power.

Failure to follow these instructions will result in death or serious injury.

⚠CAUTION

STORAGE DEVICE DAMAGE AND DATA LOSS

- Remove all power before making any contact with an installed storage device.
- Use only our optional storage devices for this product.
- Make sure you regularly back up the data since storage devices have a life span and accidental data loss can occur at any time.
- Confirm the storage device is correctly oriented before insertion.
- Do not bend, drop, or strike the storage device.
- Do not touch inside the storage device or its connectors.
- Do not disassemble or modify the storage device.
- Keep the storage device dry.

Failure to follow these instructions can result in injury or equipment damage.

⚠CAUTION

EQUIPMENT DAMAGE

Do not touch the circuit boards, parts or internal cables with your hand or metal objects, taking care to prevent electrostatic discharge and contamination of foreign substances.

Failure to follow these instructions can result in injury or equipment damage.

NOTICE

ELECTROSTATIC DISCHARGE

Take the necessary protective measures against electrostatic discharge before attempting to remove the cover.

Failure to follow these instructions can result in equipment damage.

NOTICE

BROKEN ENCLOSURE

Do not exert more torque than the amount specified.

Failure to follow these instructions can result in equipment damage.

1. Disconnect the power supply from the Box Module.
2. Touch the housing or ground connection (not the power supply) to discharge any electrostatic charge from your body.
3. Remove 12 screws on the rear side of the Box Module and pull out the rear cover.

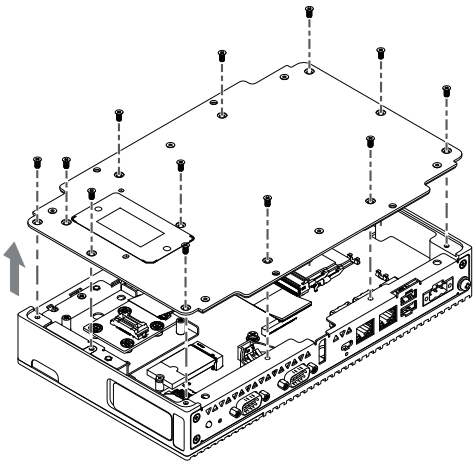

4. Remove the screw from the M.2 SSD card installation area on the product.

   NOTE: Using a Phillips screwdriver #1 is recommended.

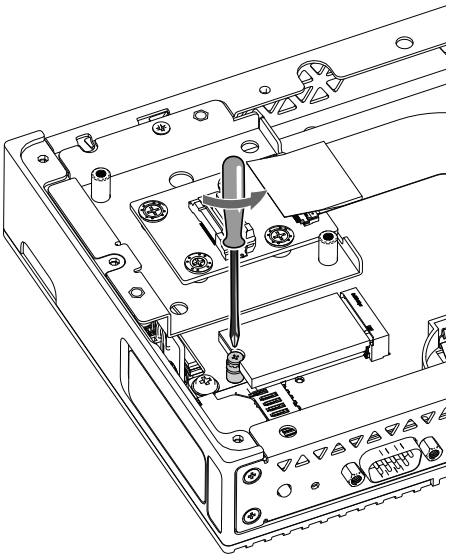

5. Pull out the M.2 SSD card from the slot.

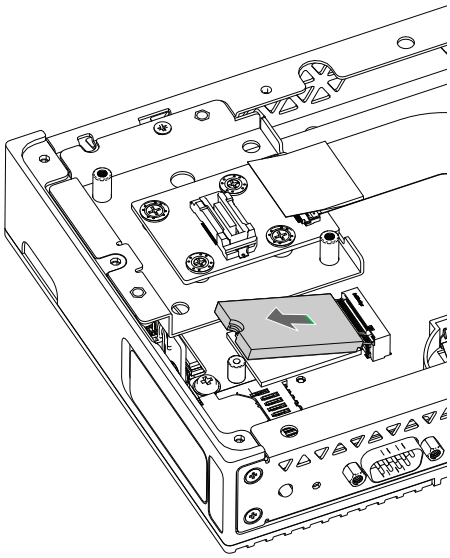

6. Insert new M.2 SSD card diagonally, then push from above.

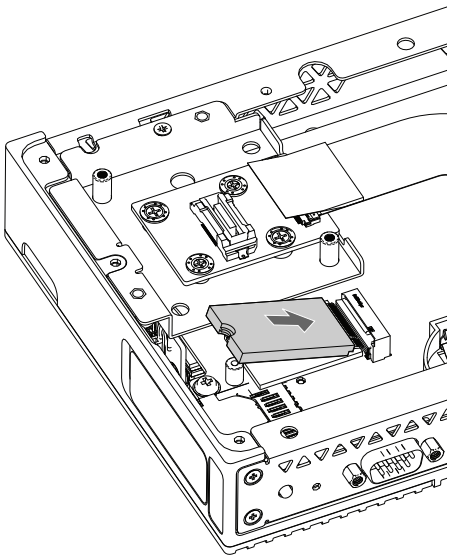

7. Secure the M.2 SSD card with the screw removed in step 4.

   NOTE:

   - Using a Phillips screwdriver #1 is recommended.
   - The necessary torque is 0.2 N•m (1.77 lb-in).

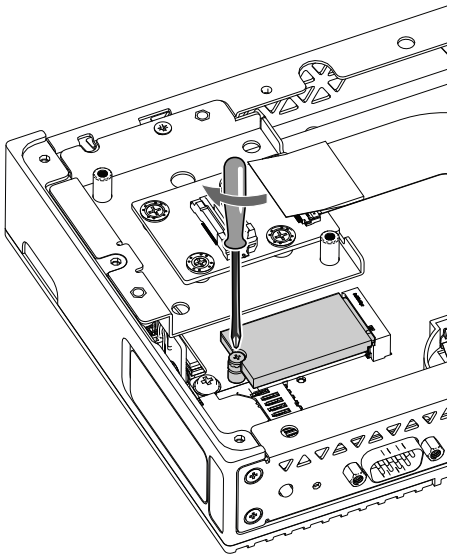

8. Place the rear cover of the Box Module and tighten with screws.

   NOTE: The necessary torque is 0.3 N•m (2.7 lb-in).

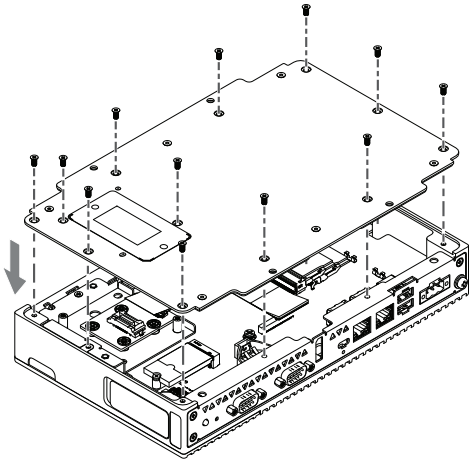

Installing M.2 SSD for Secondary Storage

When installing the M.2 SSD, the optional M.2 cooling kit is required. Purchase and install using the following steps.

M.2 cooling kit for Basic Box: HMIYP6HSM2B

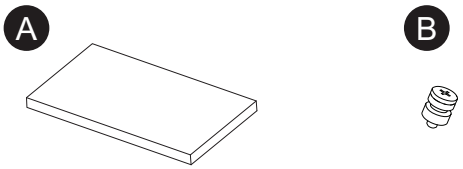

A. Heat sink pad
B. Screw for M.2 SSD

⚠⚠ DANGER

HAZARD OF ELECTRIC SHOCK, EXPLOSION, OR ARC FLASH

- Remove all power from the device before removing any covers or elements of the system, and prior to installing or removing any accessories, hardware, or cables.
- Unplug the power cable from both this product and the power supply prior to installing or removing the product.
- Always use a properly rated voltage sensing device to confirm power is off where and when indicated.
- Replace and secure all covers or elements of the system before applying power to this product.
- Use only the specified voltage when operating this product. This product is designed to use 12 to 24 Vdc. Always check whether your device is DC powered before applying power.

Failure to follow these instructions will result in death or serious injury.

⚠ CAUTION

STORAGE DEVICE DAMAGE AND DATA LOSS

- Remove all power before making any contact with an installed storage device.
- Use only our optional storage devices for this product.
- Make sure you regularly back up the data since storage devices have a life span and accidental data loss can occur at any time.
- Confirm the storage device is correctly oriented before insertion.
- Do not bend, drop, or strike the storage device.
- Do not touch inside the storage device or its connectors.
- Do not disassemble or modify the storage device.
- Keep the storage device dry.

Failure to follow these instructions can result in injury or equipment damage.

NOTICE

ELECTROSTATIC DISCHARGE

Take the necessary protective measures against electrostatic discharge before attempting to remove the cover.

Failure to follow these instructions can result in equipment damage.

NOTICE

BROKEN ENCLOSURE

Do not exert more torque than the amount specified.

Failure to follow these instructions can result in equipment damage.

1. Keep the M2 cooling kit ready.
2. Disconnect the power supply from the Box Module.
3. Touch the housing or ground connection (not the power supply) to discharge any electrostatic charge from your body.

4. Remove 3 screws on the front side of the Box Module.

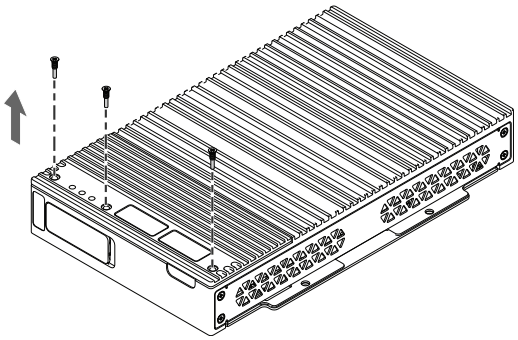

5. Remove the optional interface cover.

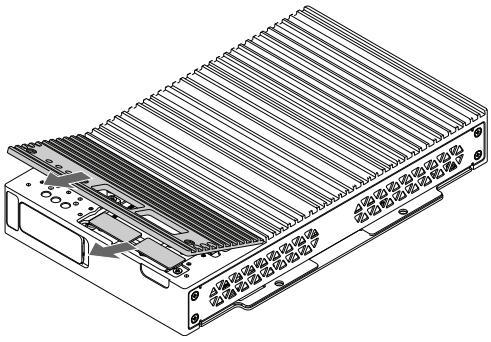

6. Peel off the protective film from the top surface and bottom surface of the heat sink pad.
7. Place the heat sink pad on the board.

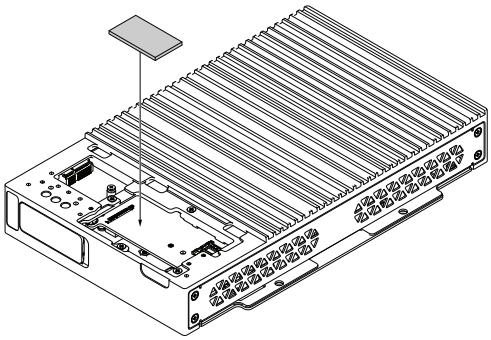

8. Insert the M.2 screw in the M.2 SSD card.

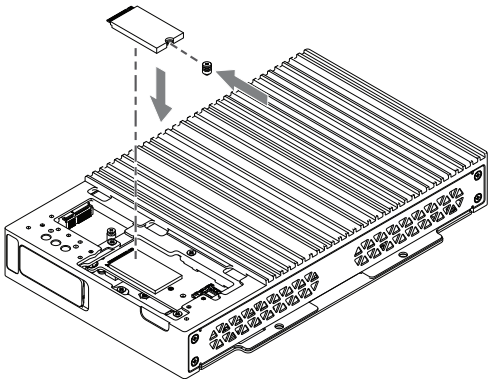

9. Insert the M.2 SSD card in the slot.

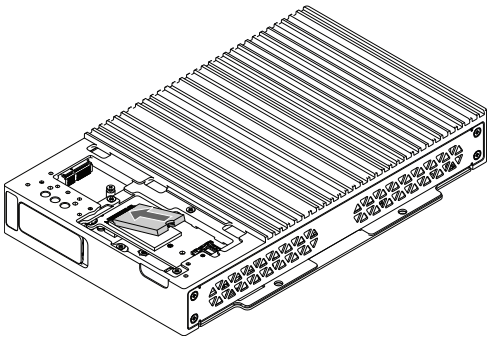

10. Secure the M.2 SSD card with the M.2 screw.

    NOTE:

    - Using a Phillips screwdriver #1 is recommended.
    - The necessary torque is 0.2 N•m (1.77 lb-in).

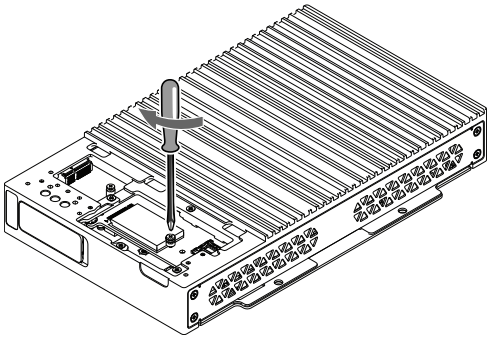

11. Place the optional interface cover and tighten with screws.

    NOTE: The necessary torque is 0.3 N•m (2.7 lb-in).

SD Card Installation

Introduction

NOTICE
LOSS OF DATA When using a SD Card: • Make sure you regularly back up the SD Card data. • While a SD Card is accessed, do not turn OFF or reset this product, and do not remove the SD Card. • Before removing the SD Card from this product, stop all operations on the SD Card. • Make sure of the SD Card's orientation before inserting it into the SD Card slot. **Failure to follow these instructions can result in equipment damage.**

NOTICE

LOSS OF DATA

When handling the SD Card:

- Avoid storing the SD Card where there is static electricity or electromagnetic waves.
- Avoid storing the SD Card in direct sunlight, near a heater, or other locations where high temperatures can occur.
- Do not bend the SD Card.
- Do not drop or strike the SD Card against another object.
- Keep the SD Card dry.
- Do not touch the SD Card connectors.
- Do not disassemble or modify the SD Card.
- Use the SD Card initialized by this product. You may not be able to use the SD Card initialized by other devices.

Failure to follow these instructions can result in equipment damage.

NOTE: To make your backups, you can either insert the SD Card directly into the SD Card Slot on your computer, or use a commercially available SD Card reader.

Inserting the SD Card

NOTE: As shown in the image below (example on the left-hand side), you can set the Write-Control Tab to prevent write operations to the SD Card. Push the tab up, as shown in the example on the right-hand side, to release the lock and enable writing to the SD Card. Before using a commercial-type SD Card, read the manufacturer's instructions.

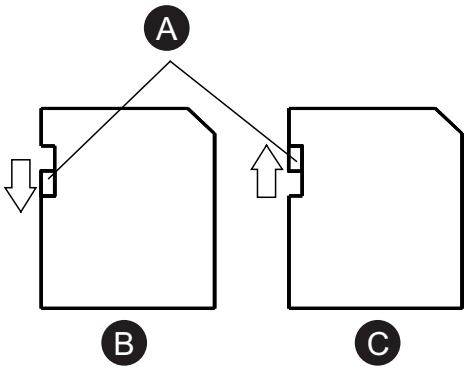

A. Write-control tab

B. Write disabled (enable to read)

C. Write enabled

1. Touch the housing or ground connection (not the power supply) to discharge any electrostatic charge from your body.

2. Remove the screw indicated on the front side the Box Module.

   NOTE: The necessary torque is 0.3 N•m (2.7 lb-in).

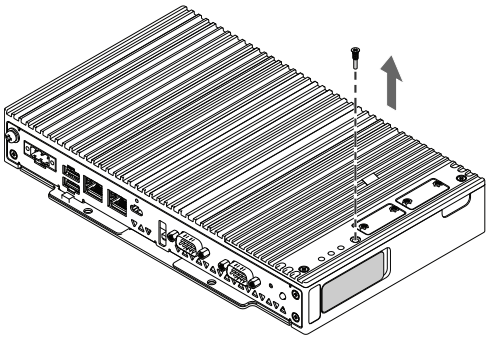

3. Open the SD slot cover.

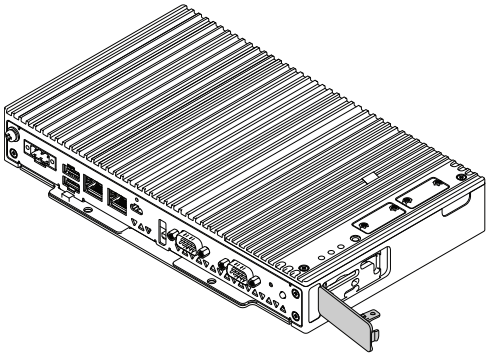

4. Insert the SD Card into the SD Card slot with the front face of the SD Card facing up.

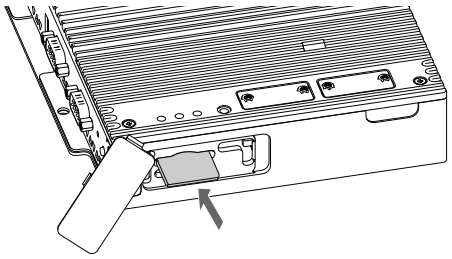

5. Push until you hear it “click”.

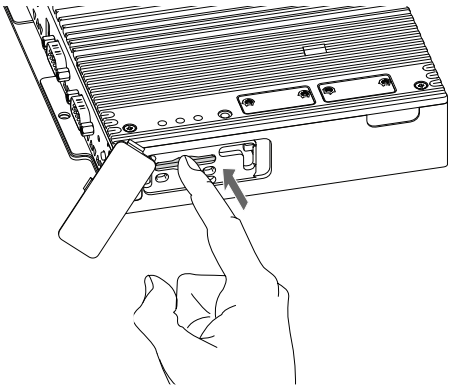

6. Close the SD slot cover.

7. Secure the SD slot cover with the screw removed in step 3.

   NOTE: The necessary torque is 0.3 N•m (2.7 lb-in).

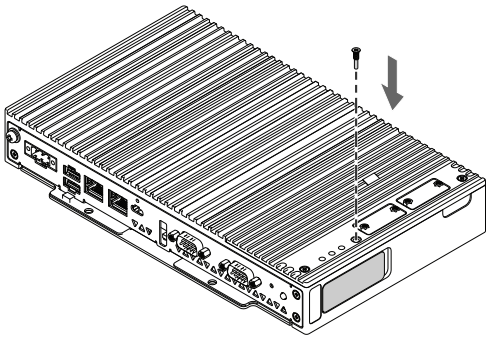

Removing the SD Card

If you remove the SD Card while it is in use, you risk corrupting your data. Before removing the SD Card from this product, stop all operations on the SD Card.

1. Remove the SD card using Windows "Safely Remove Hardware and Eject Media".
2. Remove the screw indicated on the front side the Box Module.

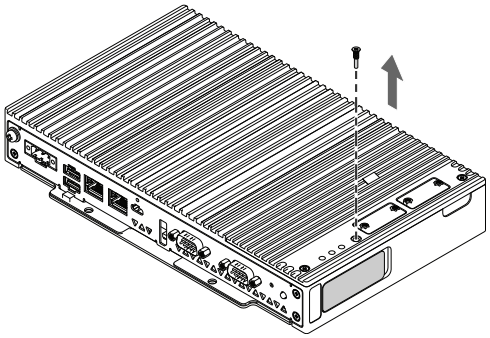

3. Open the SD slot cover.

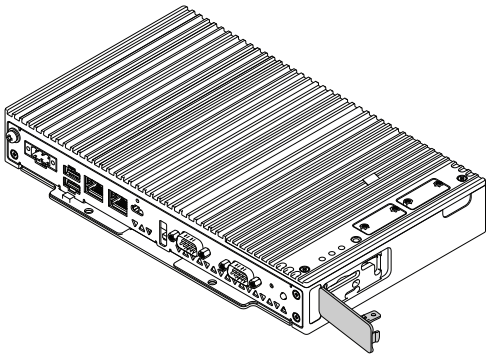

4. Push the SD Card once to release.

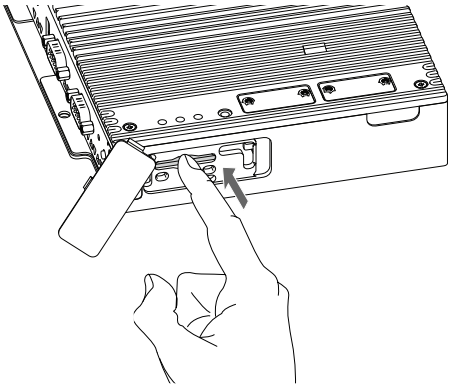

NOTE:

After using the SD Card, store the SD Card in its case or other safe location.

5. Pull out the card.

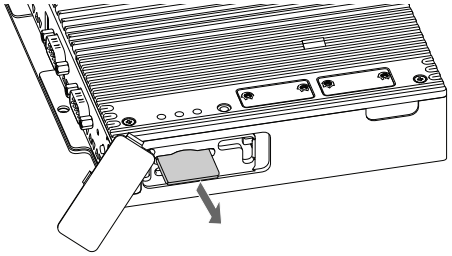

6. Close the SD slot cover.
7. Secure the SD slot cover with the screw removed in step 2.

NOTE: The necessary torque is 0.3 N•m (2.7 lb-in).

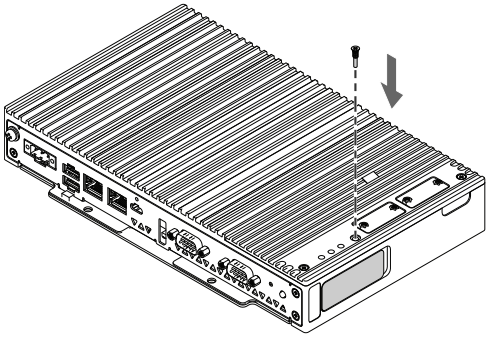

Memory Installation

DIMM Installation

⚠⚠DANGER

HAZARD OF ELECTRIC SHOCK, EXPLOSION, OR ARC FLASH

- Remove all power from the device before removing any covers or elements of the system, and prior to installing or removing any accessories, hardware, or cables.
- Unplug the power cable from both this product and the power supply prior to installing or removing the product.
- Always use a properly rated voltage sensing device to confirm power is off where and when indicated.
- Replace and secure all covers or elements of the system before applying power to this product.
- Use only the specified voltage when operating this product. This product is designed to use 12 to 24 Vdc. Always check whether your device is DC powered before applying power.

Failure to follow these instructions will result in death or serious injury.

⚠CAUTION

MEMORY MODULE DAMAGE AND DATA LOSS

- Remove all power before making any contact with an installed memory module.
- Use only our optional memory modules for this product.
- Confirm the memory module is correctly oriented before insertion.
- Do not bend, drop, or strike the memory module.
- Do not touch inside the memory module or its connectors.
- Do not disassemble or modify the memory module.
- Keep the memory module dry.

Failure to follow these instructions can result in injury or equipment damage.

⚠CAUTION

EQUIPMENT DAMAGE

Do not touch the circuit boards, parts or internal cables with your hand or metal objects, taking care to prevent electrostatic discharge and contamination of foreign substances.

Failure to follow these instructions can result in injury or equipment damage.

NOTICE

ELECTROSTATIC DISCHARGE

Take the necessary protective measures against electrostatic discharge before attempting to remove the cover.

Failure to follow these instructions can result in equipment damage.

NOTICE
BROKEN ENCLOSURE Do not exert more torque than the amount specified. **Failure to follow these instructions can result in equipment damage.**

Installing/Replacing DIMM

1. Disconnect the power supply from the Box Module.
2. Touch the housing or ground connection (not the power supply) to discharge any electrostatic charge from your body.
3. Remove 12 screws on the rear side of the Box Module and pull out the rear cover.

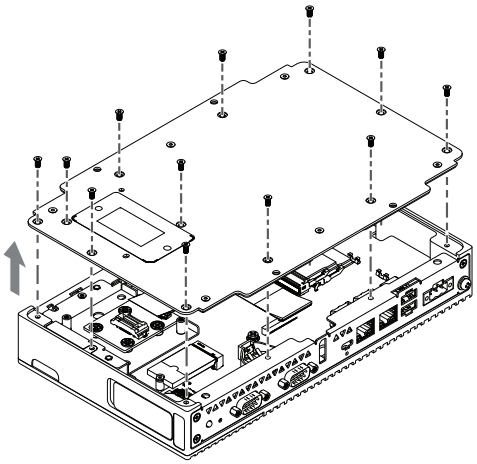

4. If DIMM is already inserted, remove the lock from the DIMM on the product.

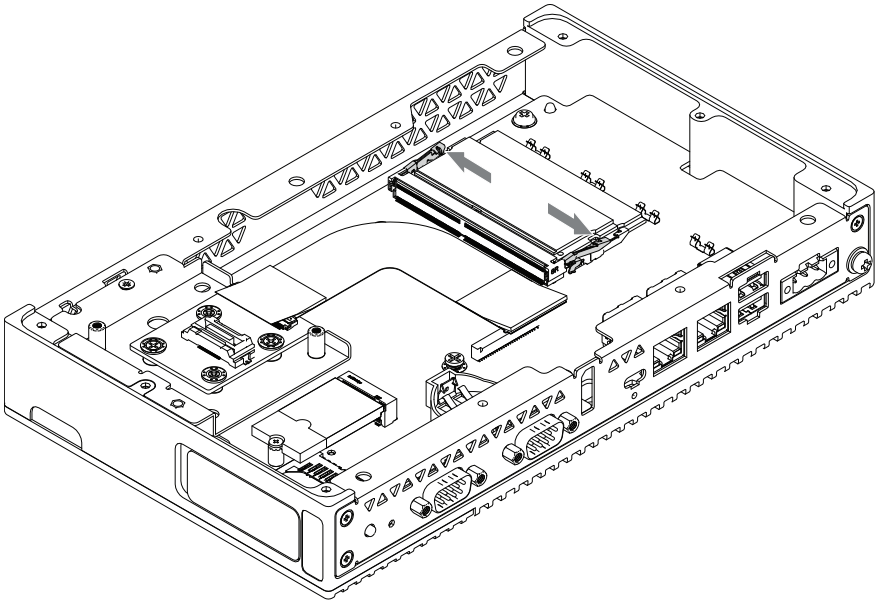

5. Remove the DIMM.

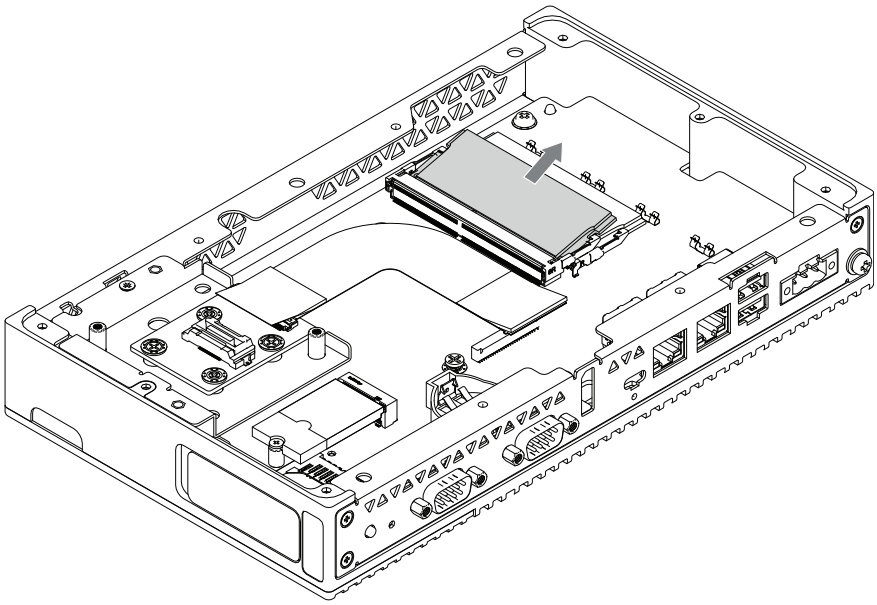

6. Insert the DIMM on the product.

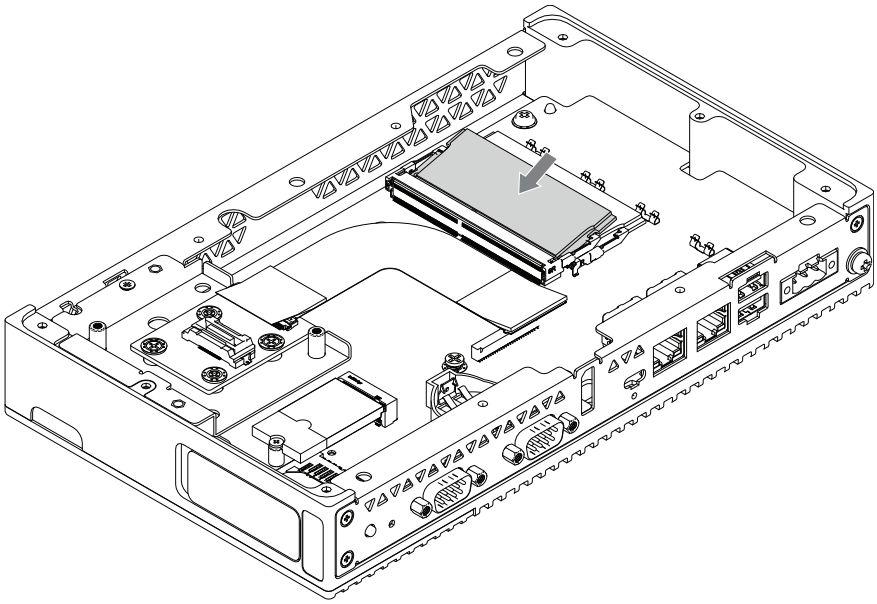

7. Push the DIMM on the product and then the DIMM is locked.

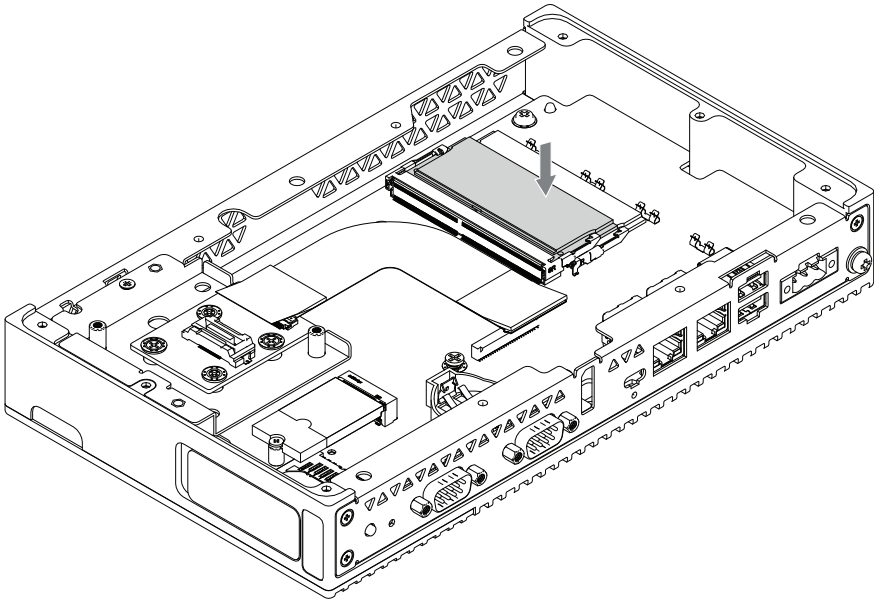

8. Place the rear cover of the Box Module and tighten with screws.

   NOTE: The necessary torque is 0.3 N•m (2.7 lb-in).

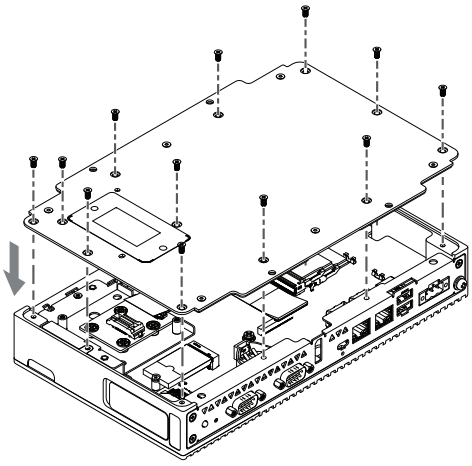

Optional Interface Installation

Common Installation Procedure

This section explains how to attach an optional interface to the Box Module.

Some optional interfaces require more than just inserting to the product. For more information, check the pages for each optional interface.

⚠⚠ DANGER

HAZARD OF ELECTRIC SHOCK, EXPLOSION, OR ARC FLASH

- Remove all power from the device before removing any covers or elements of the system, and prior to installing or removing any accessories, hardware, or cables.
- Unplug the power cable from both this product and the power supply prior to installing or removing the product.
- Always use a properly rated voltage sensing device to confirm power is off where and when indicated.
- Replace and secure all covers or elements of the system before applying power to this product.
- Use only the specified voltage when operating this product. This product is designed to use 12 to 24 Vdc. Always check whether your device is DC powered before applying power.

Failure to follow these instructions will result in death or serious injury.

NOTICE

ELECTROSTATIC DISCHARGE

Take the necessary protective measures against electrostatic discharge before attempting to remove the cover.

Failure to follow these instructions can result in equipment damage.

NOTICE
BROKEN ENCLOSURE Do not exert more torque than the amount specified. **Failure to follow these instructions can result in equipment damage.**

RS-232C isolated x 2

Package Contents

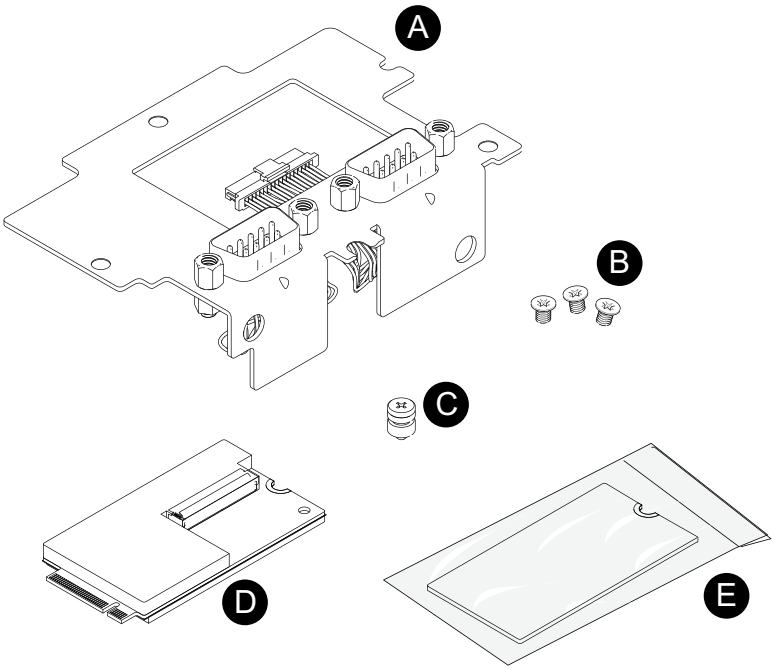

A. RS–232C module bracket
B. M3 screw x 3
C. M.2 screw x 1
D. RS-232C M.2 card
E. Insulation sheet

Specifications

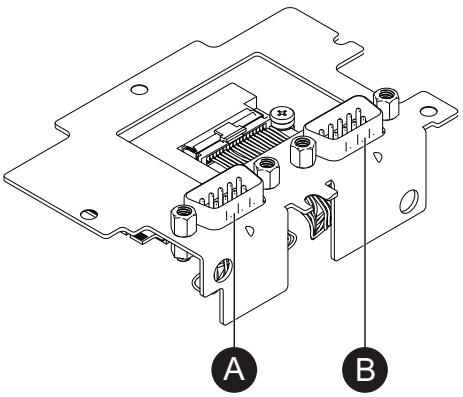

A. COM4
B. COM3

Product number	HMIYP6M2R23P2
Asynchronous transmission	RS-232C (isolated) x 2
Data length	7 or 8 bits
Stop bit	1 or 2 bits
Parity	None, odd or even
Flow control	Hardware flow control: RTS/CTS Software flow control: Xon/Xoff
Data transmission speed	2,400...115,200 bps
Connector	D-Sub 9 pin (plug)
M.2 Key ID	Key B

The serial interface is isolated. The SG (signal ground) and FG (frame ground) terminals are not connected inside this product. When the serial interface connector is D-Sub, connect the FG wire to the shell.

⚠⚠DANGER

ELECTRIC SHOCK AND FIRE

When using the SG terminal to connect an external device to this product:

- Verify that a ground loop is not created when you set up the system.
- Connect the SG terminal to remote equipment when the external device is not isolated.
- Connect the SG terminal to a known reliable ground connection to reduce the risk of damaging the circuit.

Failure to follow these instructions will result in death or serious injury.

⚠CAUTION

LOSS OF COMMUNICATION

- Do not put excessive stress on the communication ports of all connections.
- Securely attach communication cables to the panel wall or cabinet.
- Use a D-Sub 9 pin connector that has jack screws.

Failure to follow these instructions can result in injury or equipment damage.

NOTE: Use within the rated current.

Pin Assignment

D-Sub 9 pin plug connector

Module side:

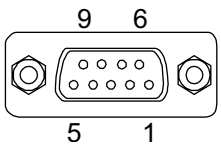

Pin No.	RS-232C		
	Signal name	**Direction**	**Description**
1	CD	Input	Carrier detect
2	RD (RXD)	Input	Receive data
3	SD (TXD)	Output	Send data
4	ER (DTR)	Output	Data terminal ready
5	SG	-	Signal ground (isolated)
6	DR (DSR)	Input	Data set ready
7	RS (RTS)	Output	Request to send
8	CS (CTS)	Input	Send possible
9	CI (RI)	Input	Called status display
Shell	FG	-	Frame ground

Recommended jack screw is #4-40 (UNC).

Installing RS-232C Module

1. Disconnect the power supply from the Box Module.
2. Touch the housing or ground connection (not the power supply) to discharge any electrostatic charge from your body.
3. Remove 3 screws on the front side of the Box Module.

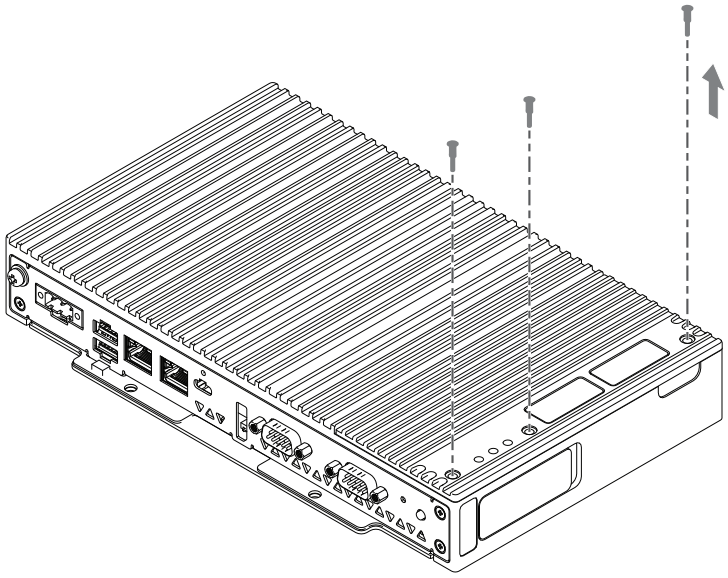

4. Remove the optional interface cover.

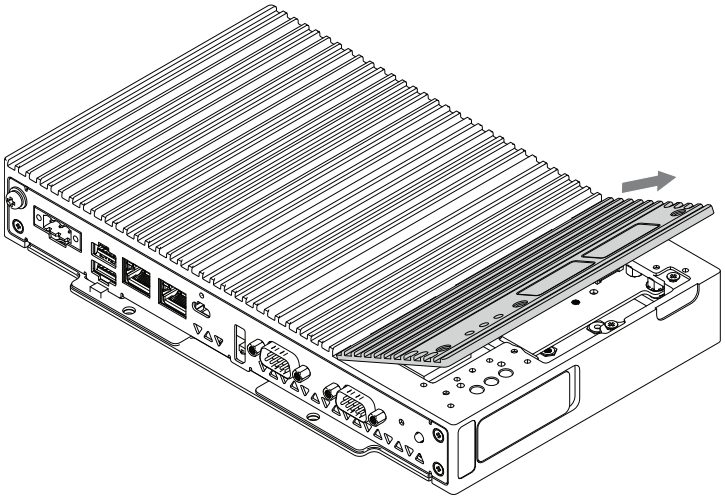

5. Put the insulation sheet on the board.

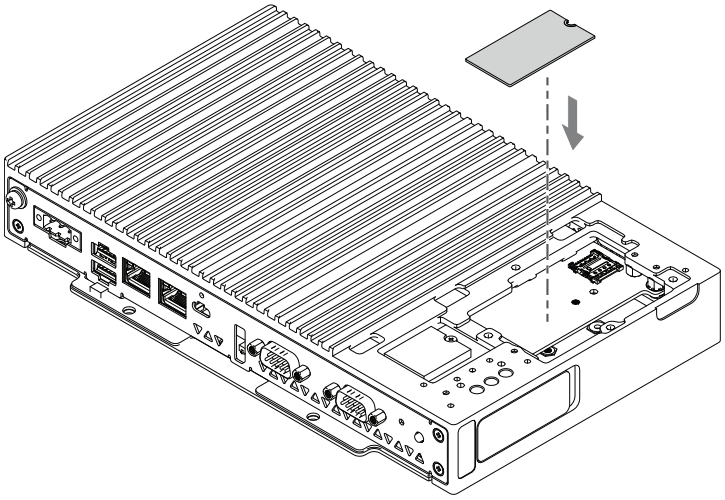

6. Insert the M.2 screw on the slot in RS-232C M.2 card.

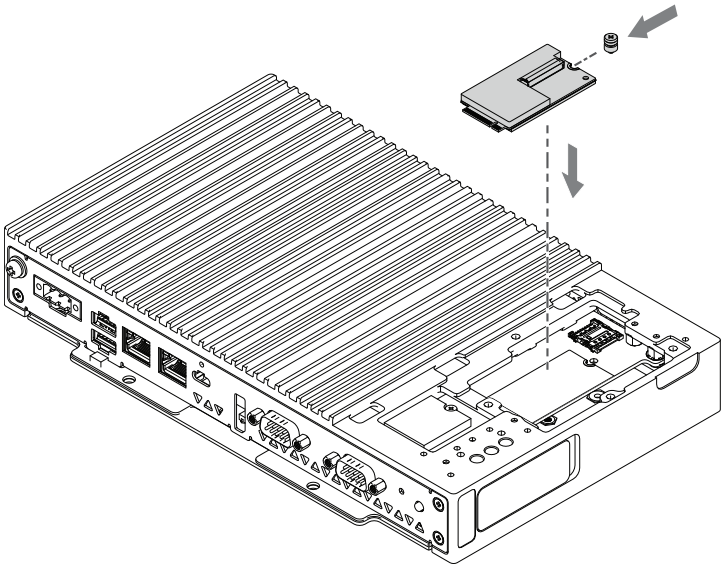

7. Insert the RS-232C M.2 card in the slot on the product.

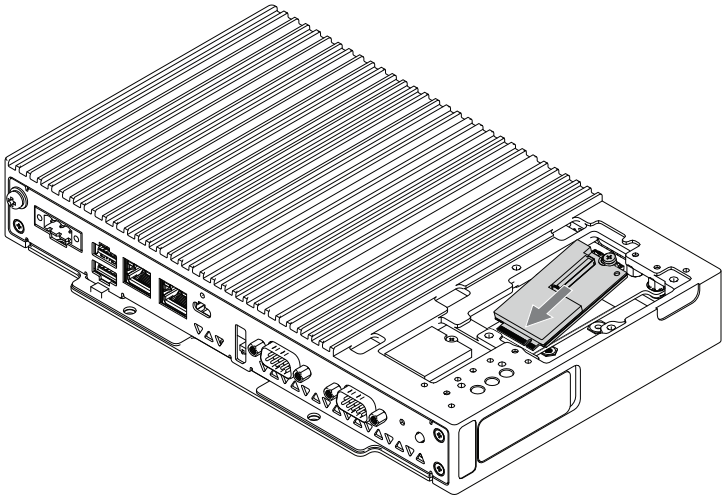

8. Push the RS-232C M.2 card and tighten with M.2 screw.

   NOTE:

   - Using a Phillips screwdriver #1 is recommended.
   - The necessary torque is 0.2 N•m (1.77 lb-in).

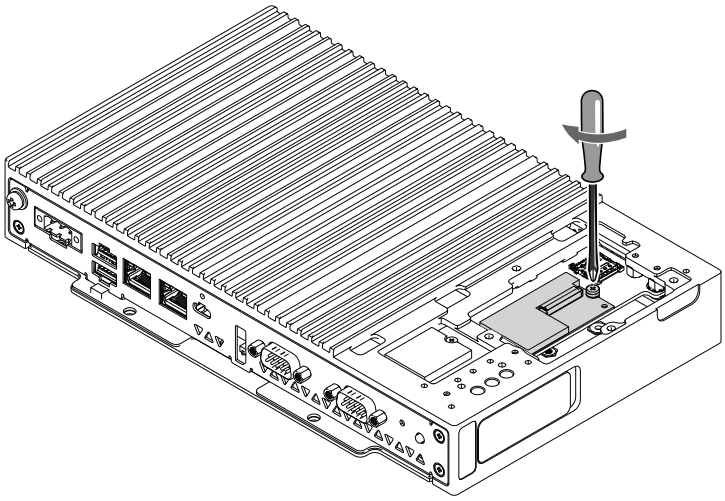

9. Connect the port cable of the RS-232C module bracket to the socket on the RS-232C M.2 card.

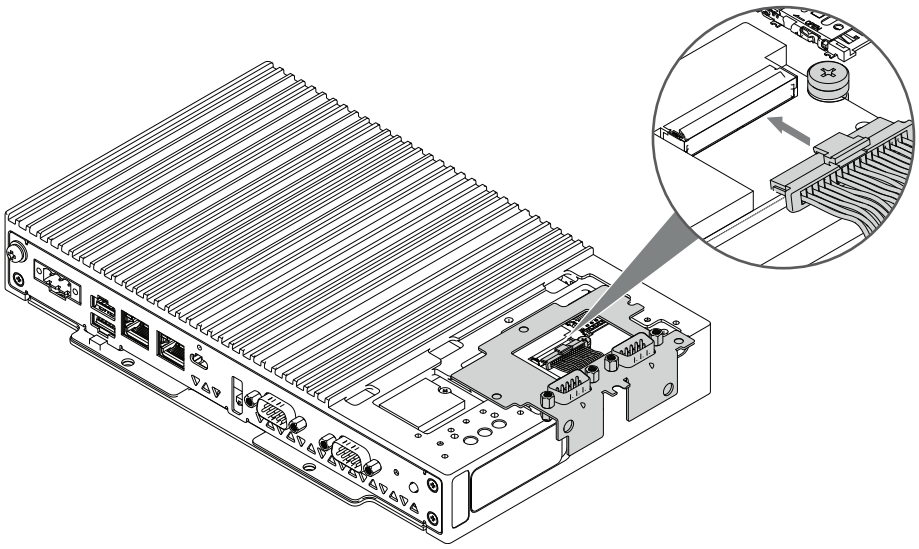

10. Fix the RS-232C module bracket on the product and tighten with M3 screws.

    NOTE: The necessary torque is 0.3 N•m (2.7 lb-in).

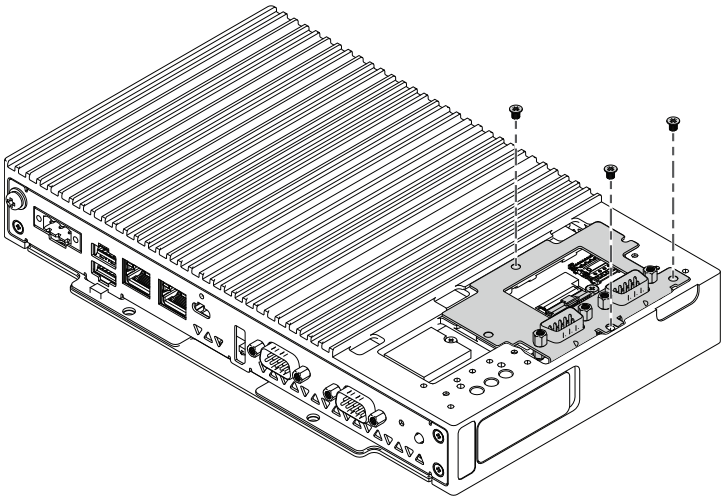

11. Place the optional interface cover on the Box Module.

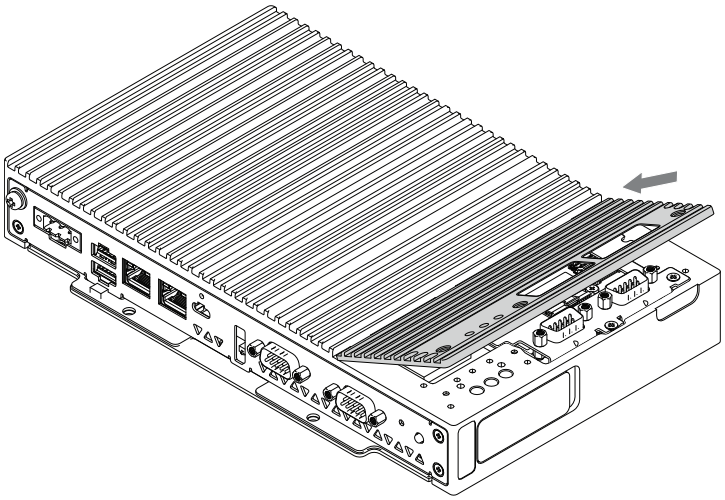

12. Secure the optional interface cover on the Box Module with the screws.

    NOTE: The necessary torque is 0.3 N•m (2.7 lb-in).

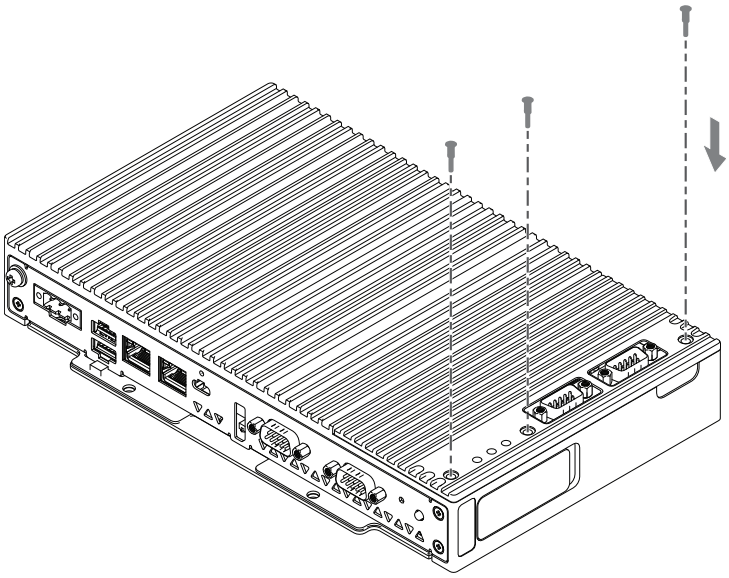

RS-422/485 isolated x 2

Package Contents

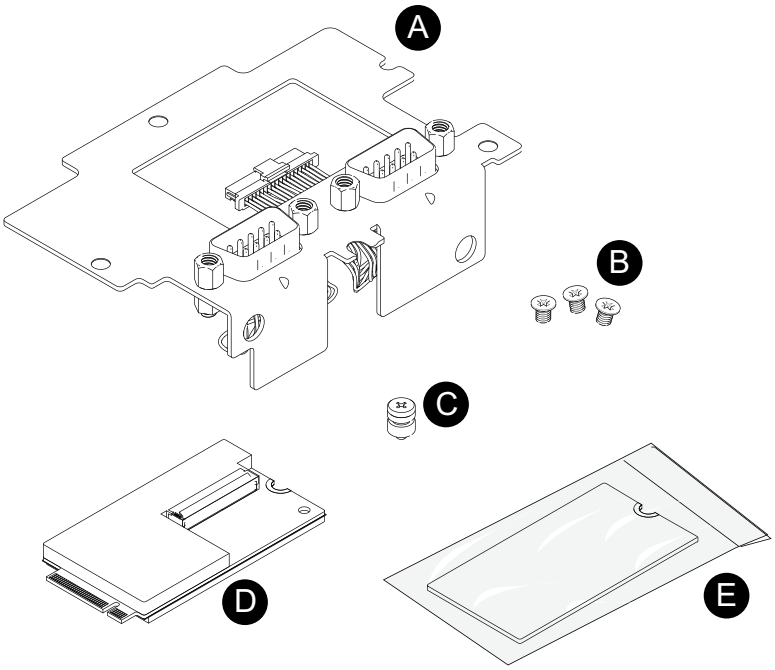

A. RS-422/485 module bracket
B. M3 screw x 3
C. M.2 screw x 1
D. RS-422/485 M.2 card
E. Insulation sheet

Specification

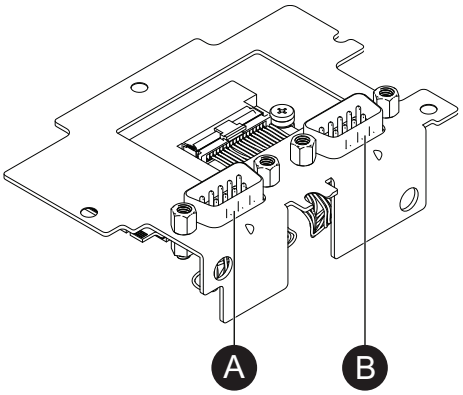

A. COM4
B. COM3

Product number	HMIYP6M2R42P2
Asynchronous transmission	RS-422 (isolated) x 2, RS-485 (isolated) x 2
Data length	7 or 8 bits
Stop bit	1 or 2 bits
Parity	None, odd or even
Flow control	Software flow control: Xon/Xoff
Auto direction control	Settings required. Refer to Port Settings, page 93.

Echo cancellation	Always enabled
Data transmission speed	2,400...115,200 bps
Connector	D-Sub 9 pin (plug)
M.2 Key ID	Key B

The serial interface is isolated. The SG (signal ground) and FG (frame ground) terminals are not connected inside this product. When the serial interface connector is D-Sub, connect the FG wire to the shell.

⚠⚠DANGER

ELECTRIC SHOCK AND FIRE

When using the SG terminal to connect an external device to this product:

- Verify that a ground loop is not created when you set up the system.
- Connect the SG terminal to remote equipment when the external device is not isolated.
- Connect the SG terminal to a known reliable ground connection to reduce the risk of damaging the circuit.

Failure to follow these instructions will result in death or serious injury.

⚠CAUTION

LOSS OF COMMUNICATION

- Do not put excessive stress on the communication ports of all connections.
- Securely attach communication cables to the panel wall or cabinet.
- Use a D-Sub 9 pin connector that has jack screws.

Failure to follow these instructions can result in injury or equipment damage.

NOTE: Use within the rated current.

Pin Assignment

RS-422: D-Sub 9 pin plug connector

Module side:

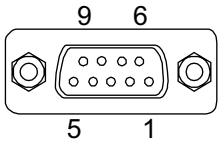

Pin No.	RS-422		
	Signal name	**Direction**	**Description**
1	TxD-	Output	Send data -
2	TxD+	Output	Send data +
3	RxD+	Input	Receive data +
4	RxD-	Input	Receive data -
5	SG	—	Signal ground (isolated)
6	NC	—	No connection
7	NC	—	No connection

Pin No.	RS-422		
	Signal name	**Direction**	**Description**
8	NC	—	No connection
9	NC	—	No connection
Shell	FG	—	Frame ground

Recommended jack screw is #4-40 (UNC).

RS-485: D-Sub 9 pin plug connector

Module side:

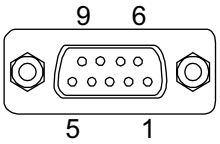

Pin No.	RS-485		
	Signal name	**Direction**	**Description**
1	Data-	Input/Output	Communication data-
2	Data+	Input/Output	Communication data+
3	NC	—	No connection
4	NC	—	No connection
5	SG	—	Signal ground (isolated)
6	NC	—	No connection
7	NC	—	No connection
8	NC	—	No connection
9	NC	—	No connection
Shell	FG	—	Frame ground

Recommended jack screw is #4-40 (UNC).

Installing RS-422/485 Module

1. Disconnect the power supply from the Box Module.
2. Touch the housing or ground connection (not the power supply) to discharge any electrostatic charge from your body.

3. Remove 3 screws on the front side of the Box Module.

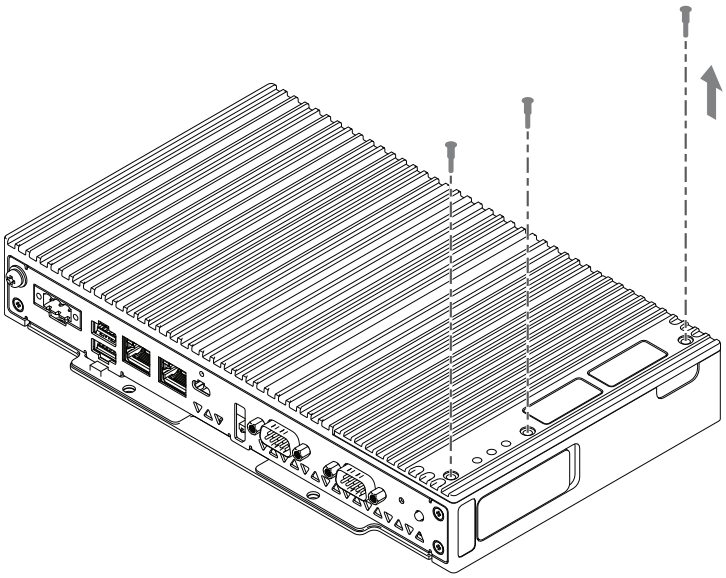

4. Remove the optional interface cover.

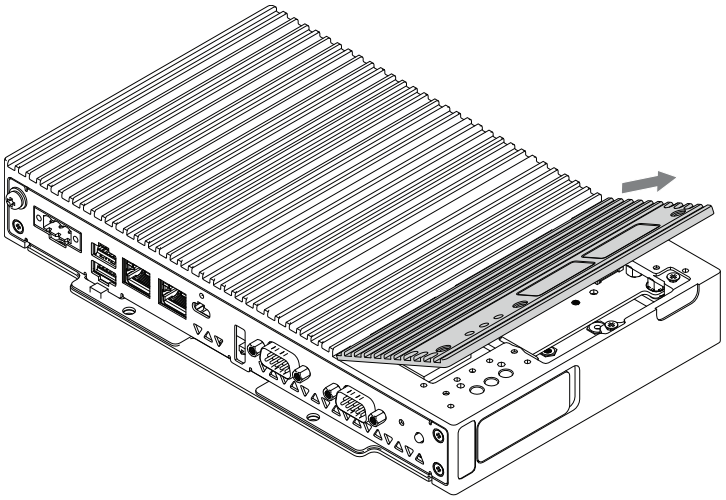

5. Put the insulation sheet on the board.

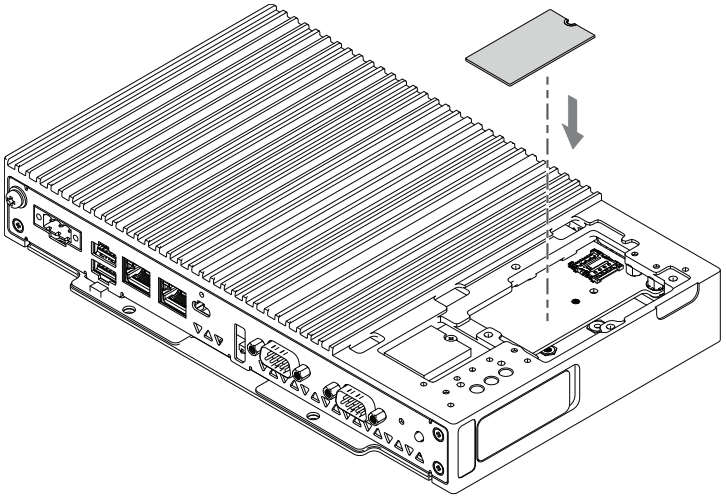

6. Insert the M.2 screw on the slot in the RS-422/485 M.2 card.

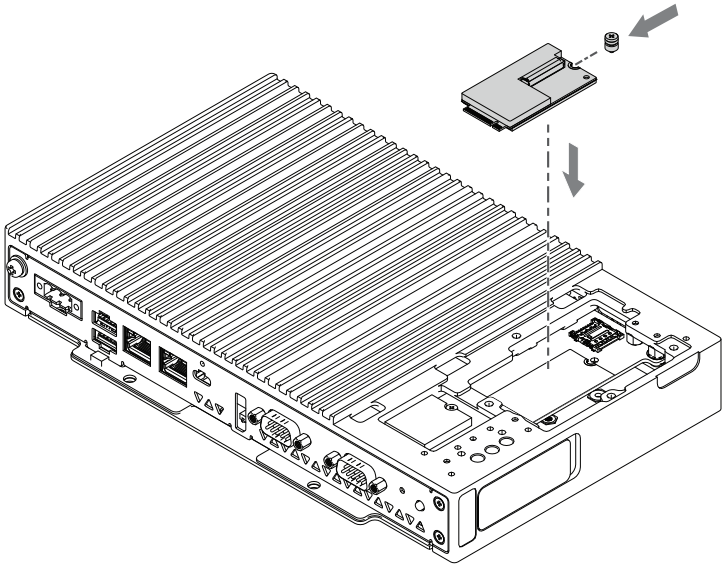

7. Insert the RS-422/485 M.2 card in the slot on the product.

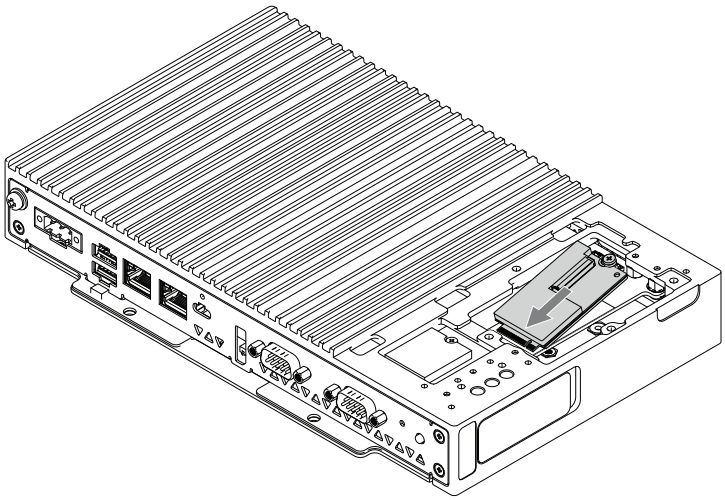

8. Push the RS-422/485 M.2 card and tighten with M.2 screw.

   NOTE:

   - Using a Phillips screwdriver #1 is recommended.
   - The necessary torque is 0.2 N•m (1.77 lb-in).

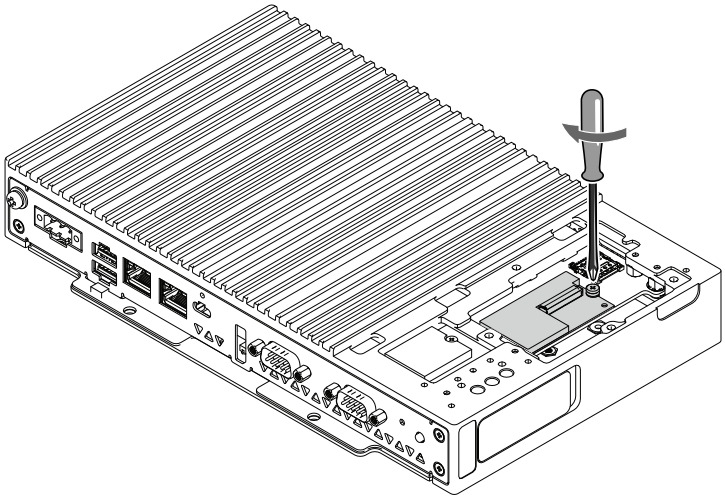

9. Connect the port cable of the RS–422/485 module bracket to the socket on the RS-422/485 M.2 card.

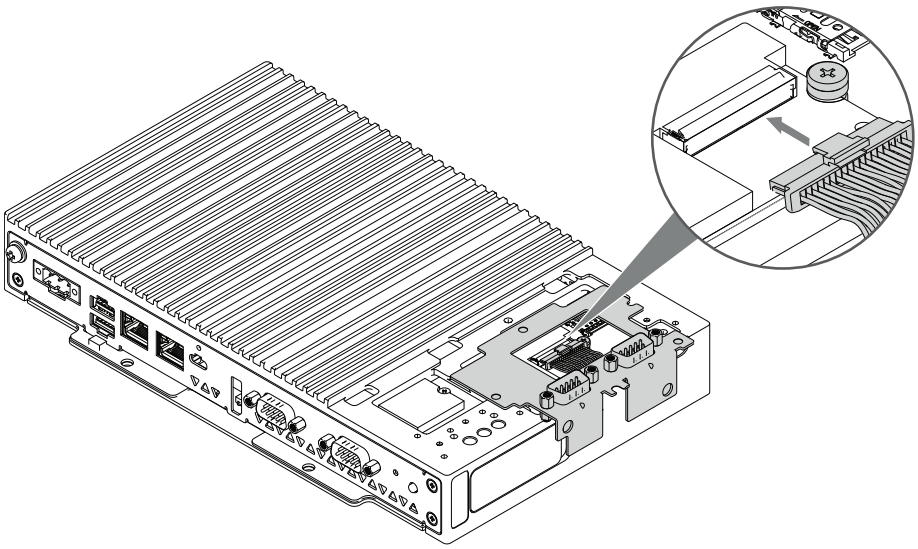

10. Fix the RS–422/485 module bracket on the product and tighten with M3 screws.

    NOTE: The necessary torque is 0.3 N•m (2.7 lb-in).

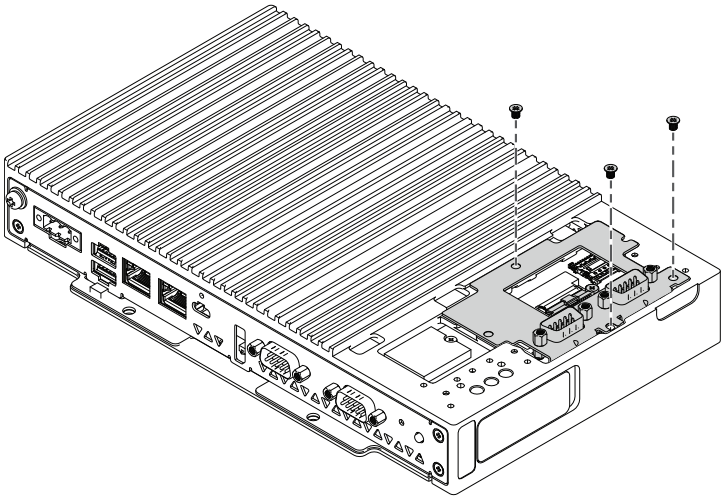

11. Place the optional interface cover on the Box Module.

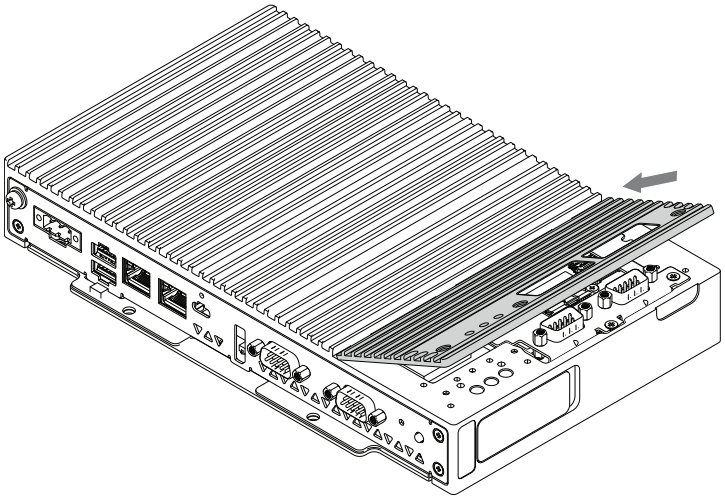

12. Secure the optional interface cover on the Box Module with the screws.

    NOTE: The necessary torque is 0.3 N•m (2.7 lb-in).

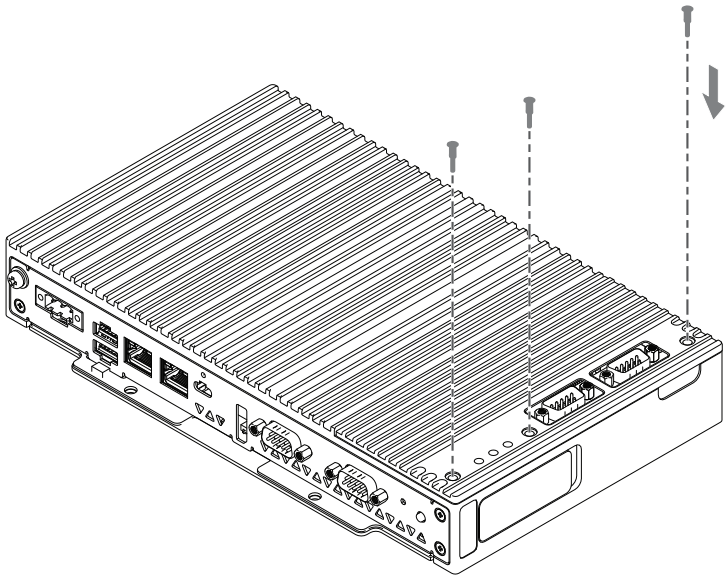

Port Setting

Termination resistor setting is necessary when using RS-422/485 isolated x 2. Set up by referring to the following table. Switching RS-485 and RS-422 is also configured with the dip switch.

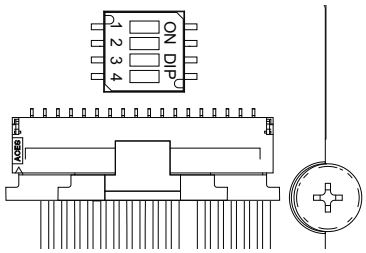

DIP SW	OFF	ON	Description
1	Normal	Termination (120 ohm)	Default: OFF for COM3
2	Normal	Termination (120 ohm)	Default: OFF for COM4
3	RS–485	RS–422	Default: OFF
4	Unused (disabled)		Default: OFF

Along with DIP switch settings, both ports must be set in the Windows® Device Manager too.

NOTE: Auto direction control is automatically enabled with this setting.

1. Open the Windows® Device Manager.
2. Open **Ports**.

3. Right-click the port to which RS-485 or RS-422 is assigned.

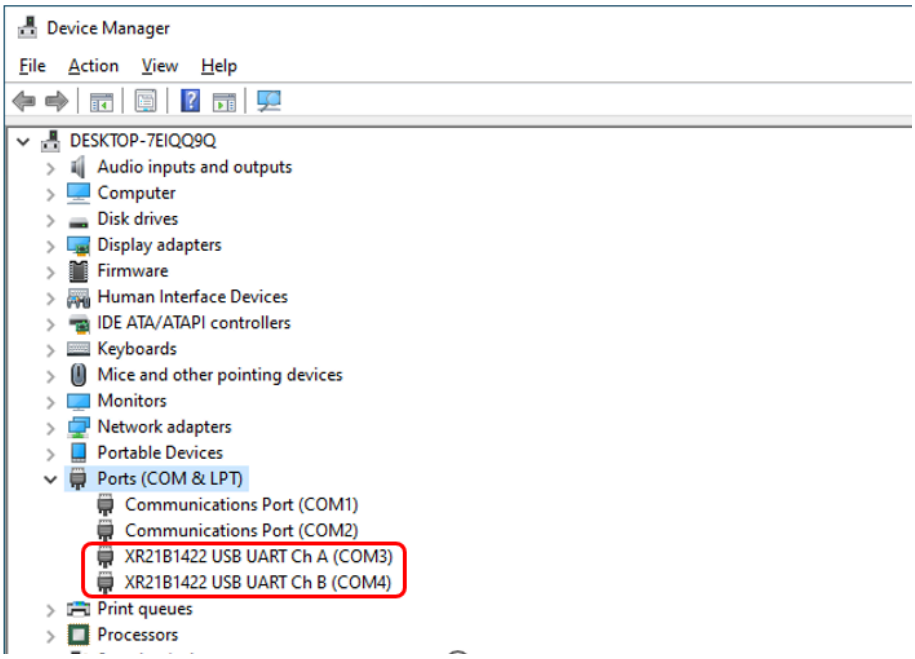

4. Select **Properties** and open the **Port Settings** tab.
5. Select the **RS-485** check box .

   NOTE:

   - Select the **RS-485** check box even for RS-422.
   - Do not change any settings other than **RS-485**.

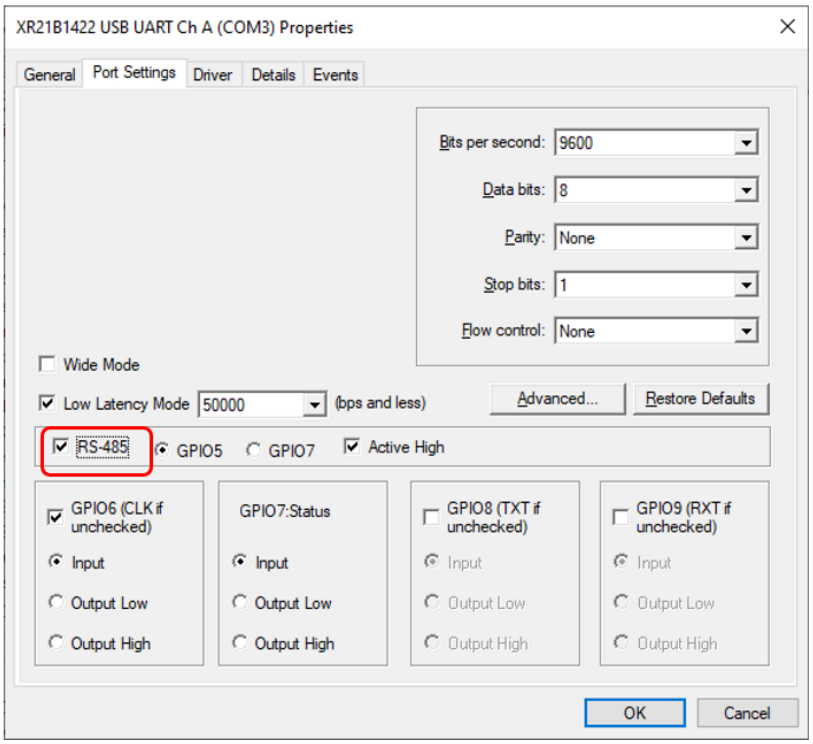

Ethernet (GbE IEEE1588)

Package Contents

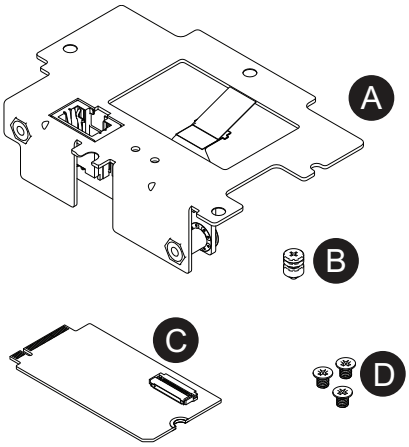

A. Ethernet module bracket
B. M.2 screw x 1
C. Ethernet M.2 card
D. M3 screw x 3

Specifications

NOTE: Install the latest version of the driver before using this interface. You can download the latest driver from our website.
www.se.com/ww/en/download

Product number	HMIYP6M2ETH
Connector	Modular jack (RJ-45) x 1
Standard	IEEE1588, IEEE802.3, 10 BASE-T/100 BASE-TX/1000 BASE-T, Wake-on-LAN (WOL) supported*1
Maximum communication distance	100 m (328.1 ft)
M.2 Key ID	Key B

*1 When the status is S4 (hybrid shutdown), Wake-on-LAN is unavailable.

⚠ CAUTION

LOSS OF COMMUNICATION

- Do not put excessive stress on the communication ports of all connections.
- Securely attach communication cables to the panel wall or cabinet.

Failure to follow these instructions can result in injury or equipment damage.

LED Indications

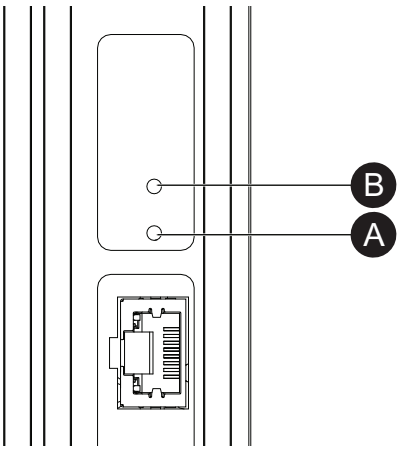

A. ACT
B. LINK

Color	Indicator	Description
Green (Active)	ON	Data transmission is available
	Flashing	Data transmission in progress
	OFF	No connection or data transmission error
Green (Link)	ON	Data transmission is available.
	OFF	No connection or data transmission error

Installing Ethernet Module

1. Disconnect the power supply from the Box Module.
2. Touch the housing or ground connection (not the power supply) to discharge any electrostatic charge from your body.
3. Remove 3 screws on the front side of the Box Module.

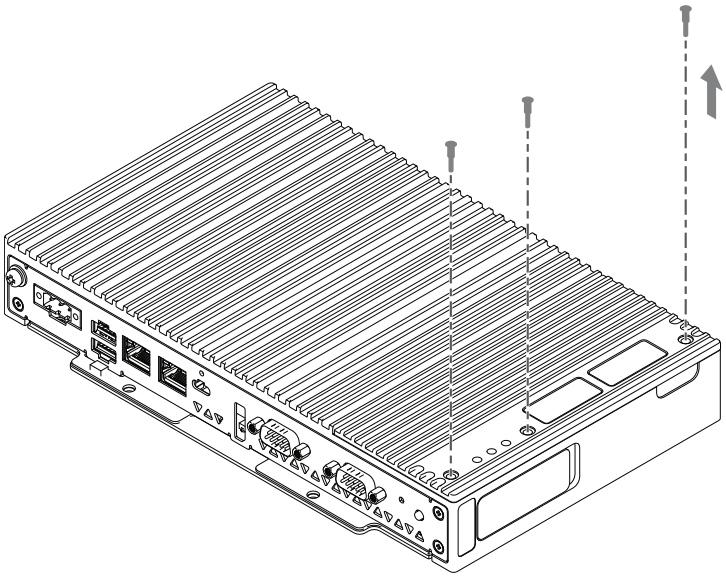

4. Remove the optional interface cover.

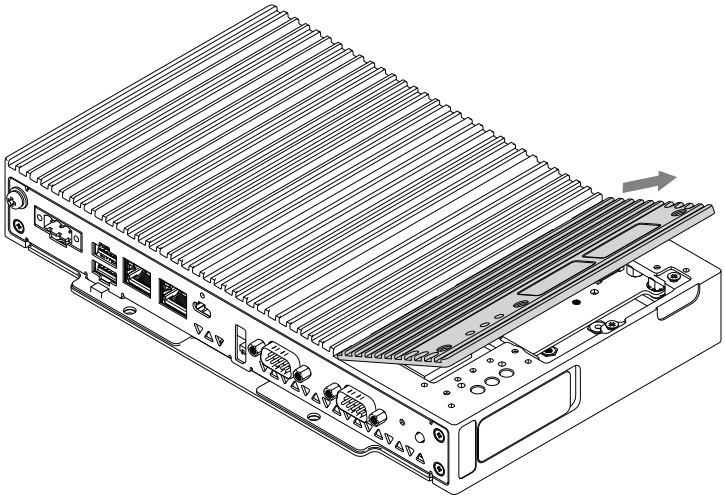

5. Insert the M.2 screw on the slot in the Ethernet M.2 card.

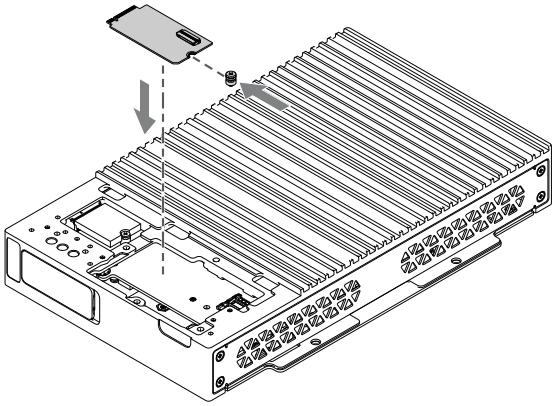

6. Insert the Ethernet M.2 card in the slot on the product diagonally.

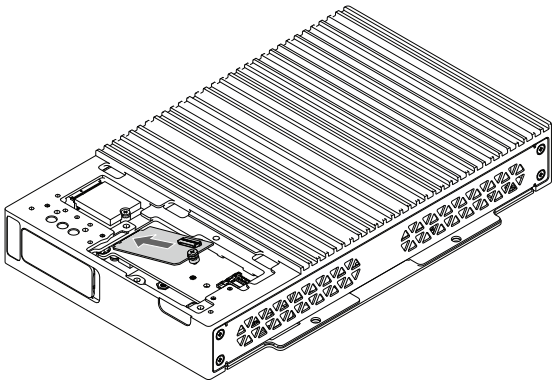

7. Push the Ethernet M.2 card down and tighten with M.2 screw.

   NOTE:

   - Using a Phillips screwdriver #1 is recommended.
   - The necessary torque is 0.2 N•m (1.77 lb-in).

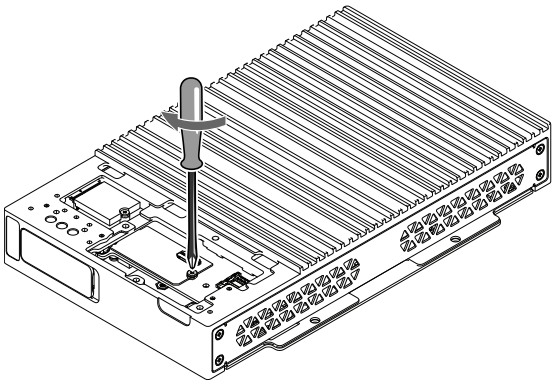

8. Place the Ethernet module bracket on the product.

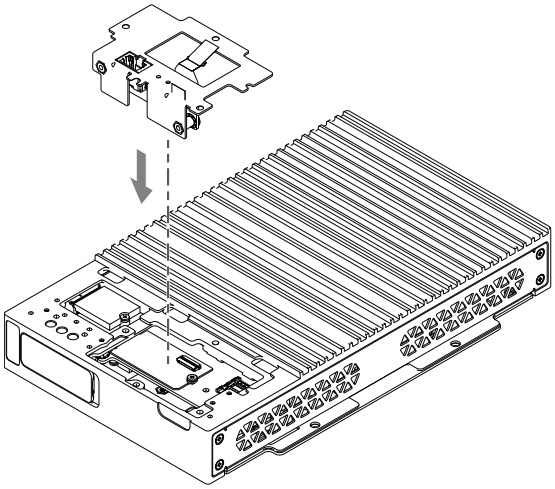

9. Connect the port cable of the Ethernet module bracket to the socket on the Ethernet M.2 card.

   NOTE: The port cable has a tape attached to prevent the cable from being disconnected. After locking the connector socket in Step 3, peel off the tape and affix the cable to the connector socket side (Step 4).

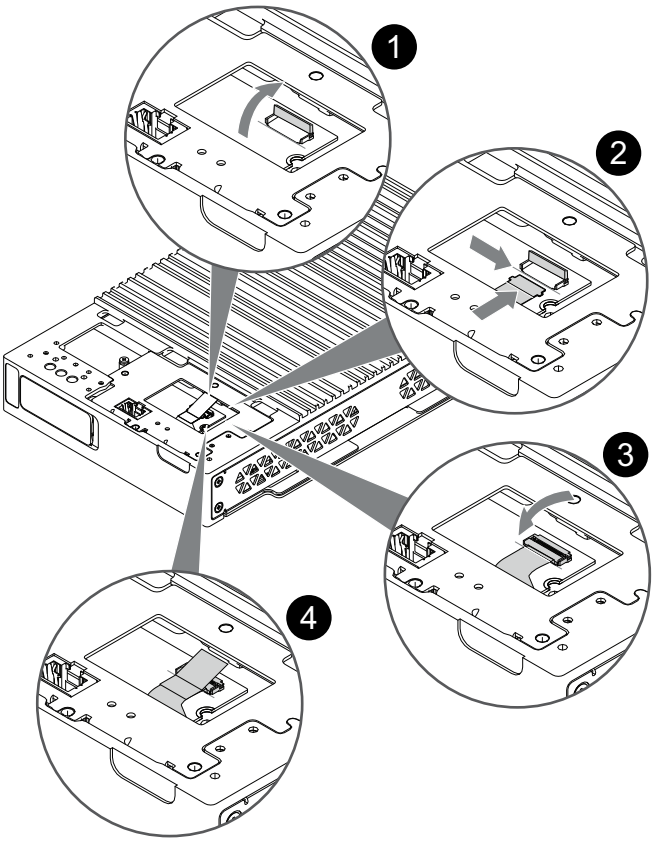

10. Secure the Ethernet module bracket on the product with M3 screws.

    NOTE: The necessary torque is 0.3 N•m (2.7 lb-in).

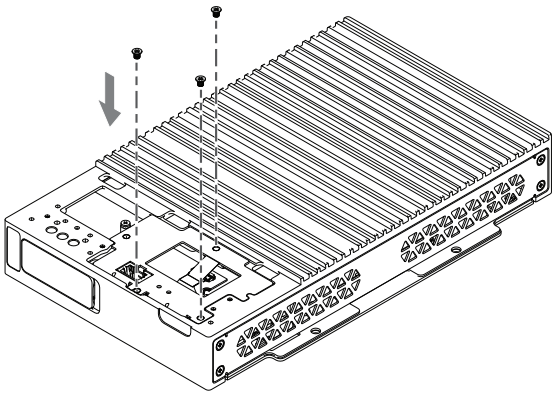

11. Place the optional interface cover on the Box Module.

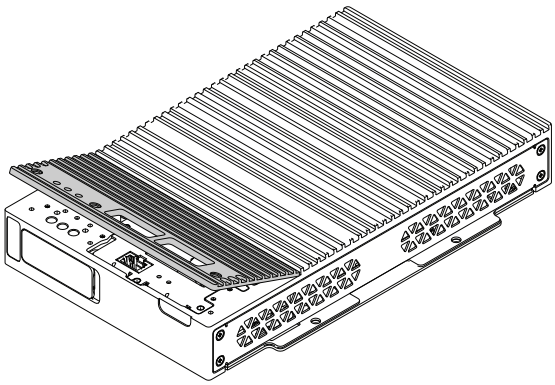

12. Secure the optional interface cover on the Box Module with the screws.

    NOTE: The necessary torque is 0.3 N•m (2.7 lb-in).

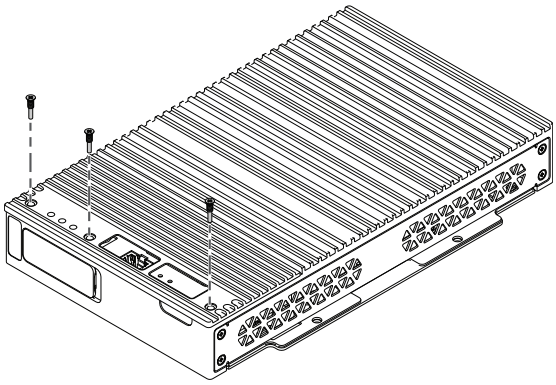

WiFi/Bluetooth with Antennas

Package Contents

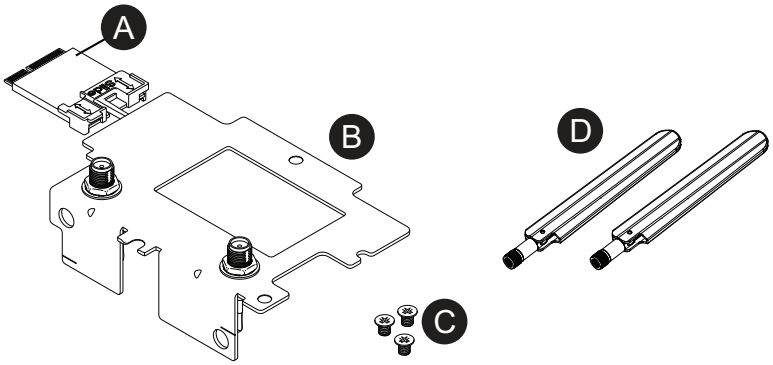

A. WiFi/Bluetooth M.2 card
B. WiFi/Bluetooth module bracket
C. M3 screw x 3
D. Antenna x 2

NOTE:

- This product/accessory has not obtained standards or certifications related to radio frequency. Please obtain if required by the standards and certifications in your country. You can find the certification information on the Wifi/Bluetooth card on our website. Search with the Wifi/Bluetooth part number (HMIYP6M2WF).
  www.se.com/ww/en/download
- Use this product in accordance with the laws, regulations and standards of your country.

Specifications

Product number		HMIYP6M2WF
WiFi	Connector	Antenna connector (SMA plug) x 2
	Transmission speed	IEEE802.11a: max 54 Mbps IEEE802.11b: max 11 Mbps IEEE802.11g: max 54 Mbps IEEE802.11n (Wi-Fi 4): max 300 Mbps IEEE802.11ac (Wi-Fi 5): max 1733 Mbps

		IEEE802.11ax (Wi-Fi 6): max 2402 Mbps
	Network authentication	WPA, WPA2, WPA3, 802.1X
	Data encryption	AES-CCMP(128 bit), AES-GCMP (256 bit)
Bluetooth	Standard	Bluetooth 5.3
	Power class	Class 1
M.2 Key ID	Key E	

⚠ WARNING

ELECTROMAGNETIC / RADIO INTERFERENCE

If you are uncertain of the policy that applies to the use of the WiFi/Bluetooth module, ask the administrator about its use before you turn it on.

Failure to follow these instructions can result in death, serious injury, or equipment damage.

2.4 GHz Wireless Devices

The WiFi/Bluetooth module uses the 2.4 GHz frequency range, which is used by a wide range of wireless equipment. Example usage includes industrial, scientific, and medical equipment such as microwave ovens, on-site wireless stations (requiring licenses), low-power wireless stations (not requiring licenses) as well as amateur wireless stations (requiring licenses).

1. Before use, confirm that no on-site wireless stations and specified low-power wireless stations or amateur wireless stations operate in your vicinity.
2. In the event that the WiFi/Bluetooth module causes harmful interference to any other "on-site wireless stations", immediately change the channel frequency of the WiFi/Bluetooth module, or change its location, or halt operation of radio emissions and contact the administrator of the wireless network to resolve the issue.

Security on Your Wireless LAN

Because wireless LANs do not normally provide adequate data security, the following problems may occur.

1. Unlawful access of communication information.
   - There is a chance that information found in emails, and personal information such as user IDs, passwords, and credit card numbers, may be intentionally intercepted by a malicious third party.
2. Illegal Access

   A malicious third party may be able to access personal or company data over the company's local area network without permission, to:
   - Obtain personal and confidential information (information leak)
   - Impersonate someone by communicating as that person and disseminating invalid information (spoofing)
   - Alter intercepted communications and re-transmitting tolerated content (falsification)
   - Cause critical damage to data and or systems due to a computer virus (damage).

This wireless LAN product includes security features that enable you to configure security-related settings that reduce the likelihood of the above-mentioned problems.

We recommend that you make yourself fully acquainted with the possible implications of what might happen if you use a wireless product without enabling security features, and that you configure security-related settings and use wireless products at your own responsibility.

Antenna size

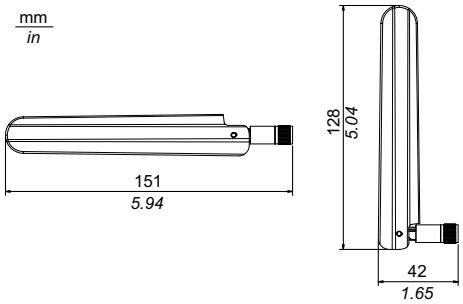

Attaching the WiFi/Bluetooth Module

⚠ CAUTION

LOSS OF COMMUNICATION

Do not put excessive stress on the communication ports of all connections.

Failure to follow these instructions can result in injury or equipment damage.

1. Disconnect the power supply from the Box Module.
2. Touch the housing or ground connection (not the power supply) to discharge any electrostatic charge from your body.
3. Remove 3 screws on the front side of the Box Module.

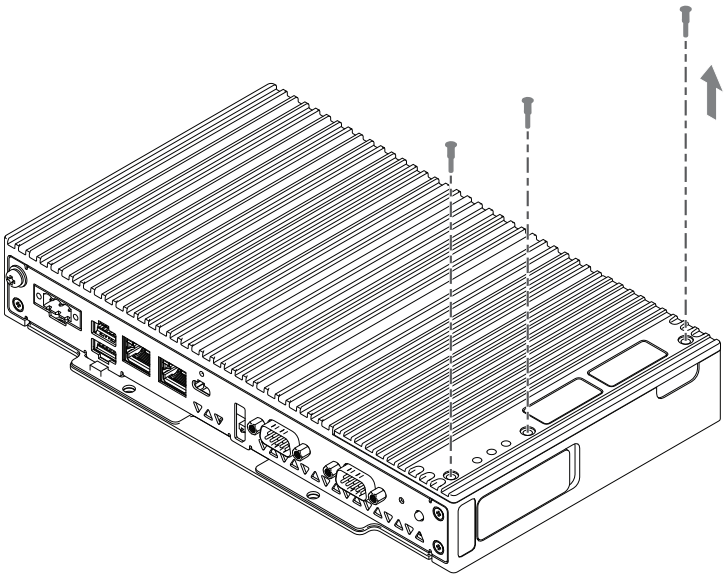

4. Remove the optional interface cover.

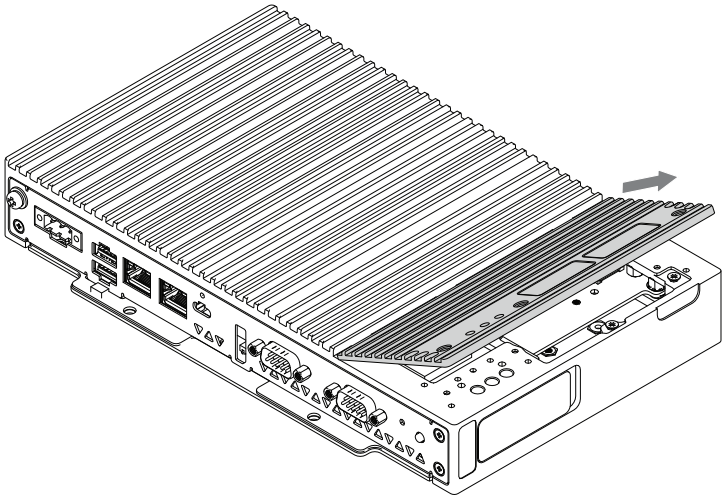

5. Remove the screw from the installation area of the WiFi/Bluetooth card on the interface unit.

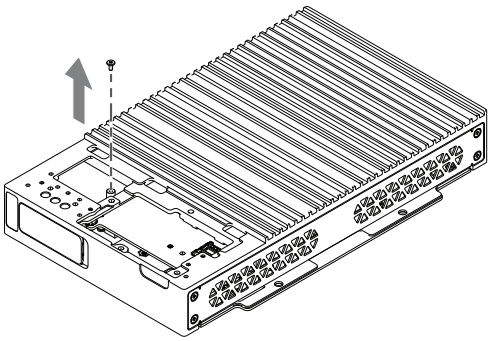

6. As shown below, insert the WiFi/Bluetooth card diagonally, then push from above.

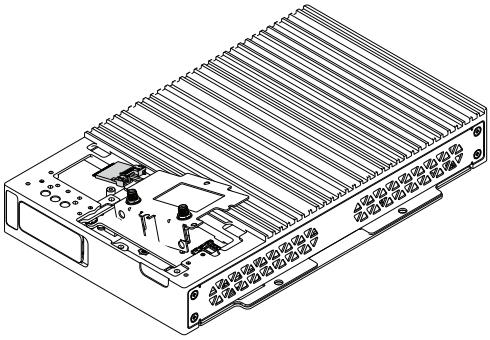

7. Secure the card with the screw removed in step 5.

   NOTE:

   - Using a Phillips screwdriver #1 is recommended.
   - The necessary torque is 0.2 N•m (1.77 lb-in).

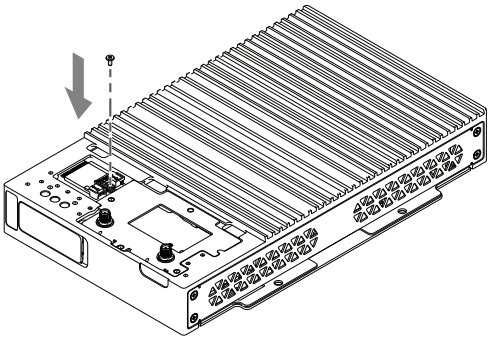

8. Fix the Wifi/Bluetooth module bracket on the product and tighten with M3 screws.

   NOTE: The necessary torque is 0.3 N•m (2.7 lb-in).

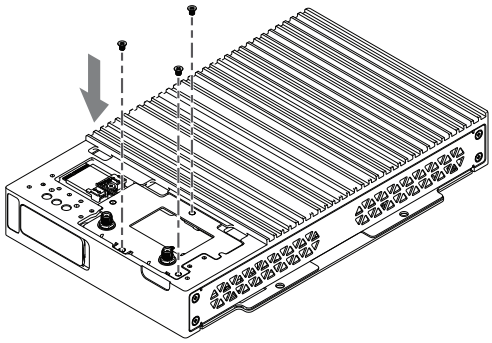

9. Place the optional interface cover on the Box Module.

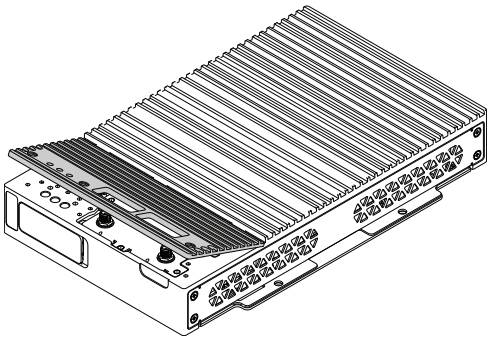

10. Secure the optional interface cover on the Box Module with the screws.

    NOTE: The necessary torque is 0.3 N•m (2.7 lb-in).

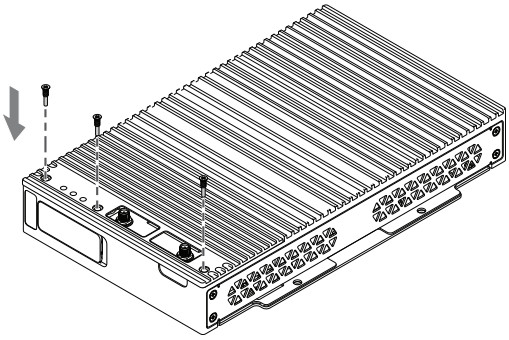

11. Attach the antenna only after mounting the product on the panel.

    Do not block the antenna area with your hand, body or other objects. It may cause interference in communications.

    You can change the direction of antennas, up, down, left and right.

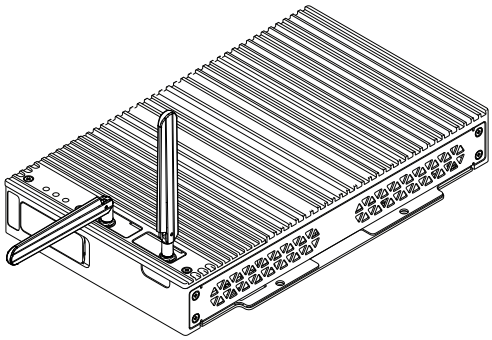

    You can attach the antenna to the outside of the panel using the following optional cable.

    WiFi/Bluetooth expanded antenna cable (3 m): HMIYP6CBWF3M

    When the optional cable is used, the dimensions of the panel opening is as follows.

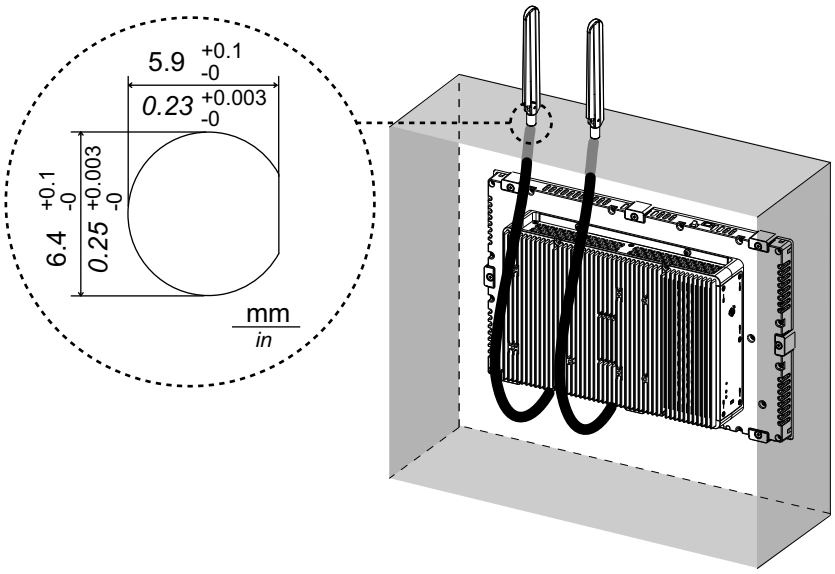

4G Cellular

Package Contents

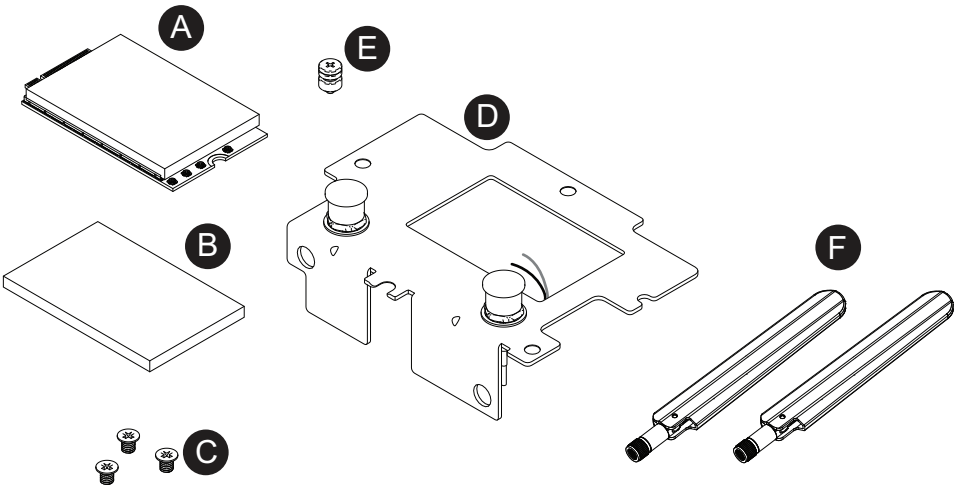

A. 4G M.2 card
B. Heat sink pad
C. M3 screw x 3
D. 4G cellular module bracket
E. M.2 screw x 1
F. Antenna x 2

NOTE:

- Use the interface unit and SIM card that match the frequency in your country.
- Use this product in accordance with the laws, regulations and standards of your country.
- This product/accessory has not obtained standards or certifications related to radio frequency. Please obtain if required by the standards and certifications in your country.
- The data communication is to be set up with Windows standard settings. Refer to Cellular, page 136.

Specifications

Product number	HMIYP6M24GW
SIM card type	micro SIM 3FF, 12 x 15 mm
M.2 Key ID	Key B

4G

Standard	3GPP Release 12, LTE-FDD, LTE-TDD
Band	LTE-FDD: B1, B2, B3, B4, B5, B7, B8, B12, B13, B14, B17, B18, B19, B20, B25, B26, B28, B29, B30, B32, B66, B71 LTE-TDD: B34, B38, B39, B40, B41, B42, B43, B46, B48
Link speed	LTE Cat.6

3G

Standard	3GPP Release 9, DC-HSDPA, HSPA+, HSDPA, HSUPA, W-CDMA
Band	B1, B2, B3, B4, B5, B6, B8, B19
Link speed	Max.42 Mbps (DC-HSDPA, DL) Max.5.76 Mbps (HSUPA, UL)

NOTE: 2G communication (GSM) is not available.

Antenna size

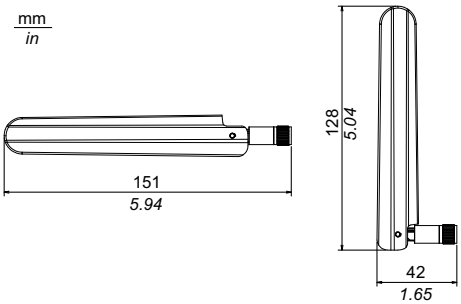

Attaching the 4G Cellular Module and SIM card

⚠ CAUTION

LOSS OF COMMUNICATION

Do not put excessive stress on the communication ports of all connections.

Failure to follow these instructions can result in injury or equipment damage.

1. Disconnect the power supply from the Box Module.
2. Touch the housing or ground connection (not the power supply) to discharge any electrostatic charge from your body.
3. Remove 3 screws on the front side of the Box Module.

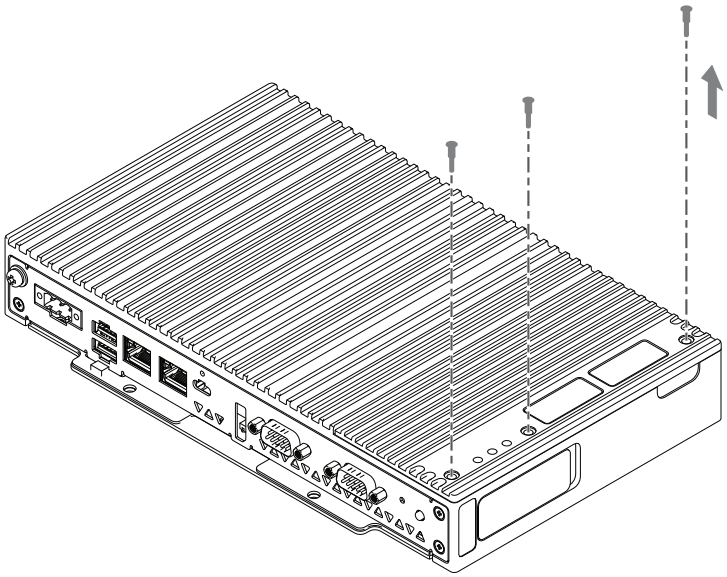

4. Remove the optional interface cover.

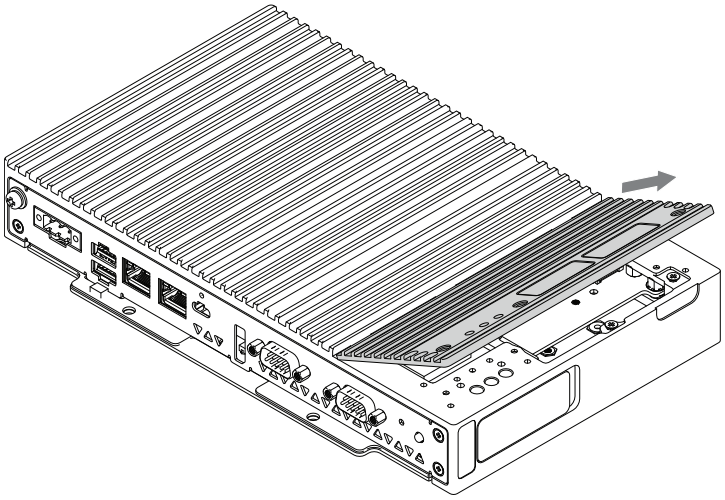

5. Put the heat sink pad on the board.

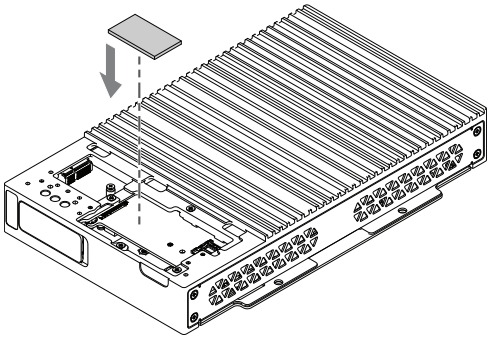

6. Insert the M.2 screw on the slot in 4G M.2 card.

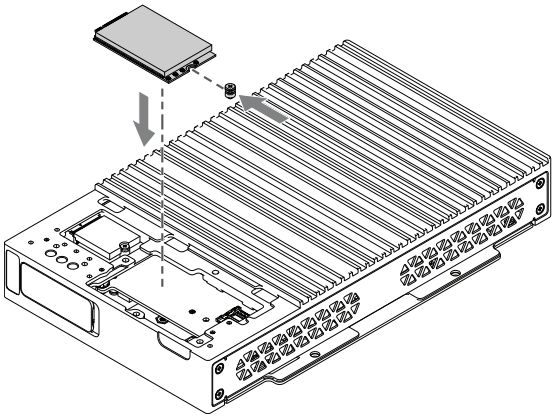

7. Insert the 4G M.2 card in the slot on the product.

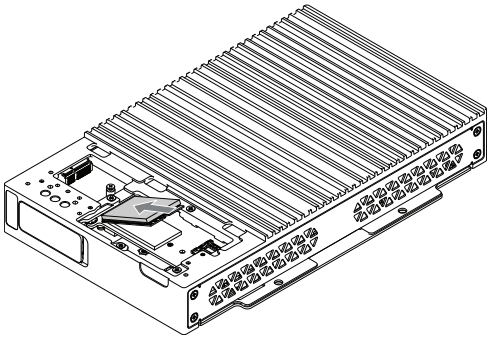

8. Push the 4G M.2 card from above and secure it with the M.2 screw.

   NOTE:

   - Using a Phillips screwdriver #1 is recommended.
   - The necessary torque is 0.2 N•m (1.77 lb-in).

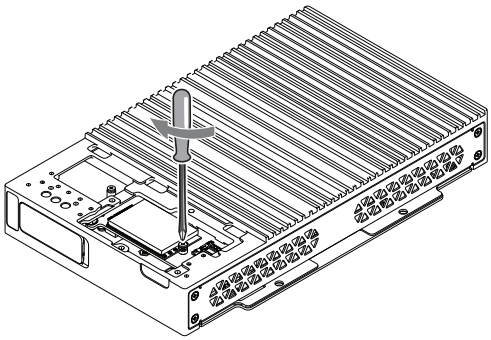

9. Slide the cover of the SIM card holder in the direction of the arrow to open it.

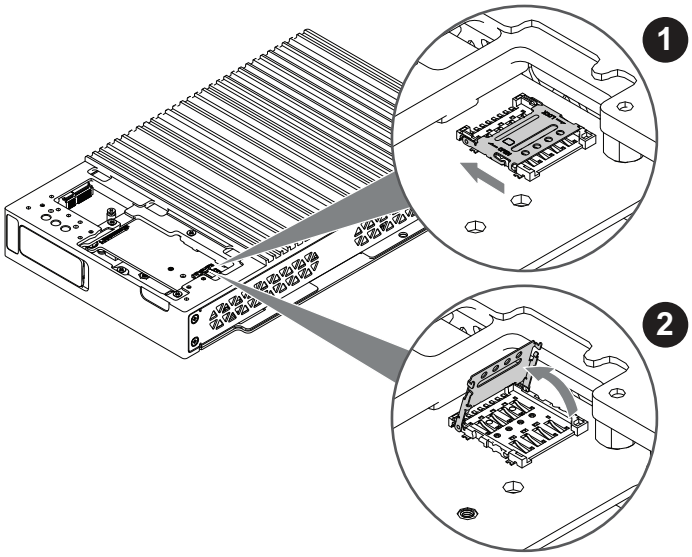

10. Insert the SIM card into the slot and close and slide the cover in the direction of the arrow to lock.

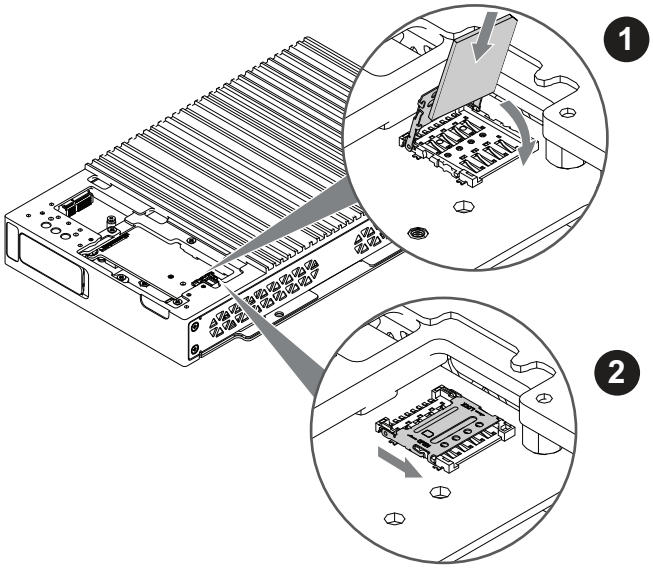

11. Insert the 4G module bracket.

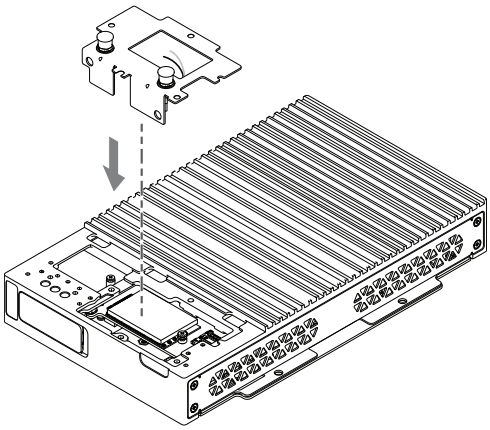

12. As shown below, plug the antenna cable connector securely to the connector on the 4G M.2 card. Looking from above the interface, plug the black cable connector to the connector on the left side on the 4G M.2 card, and the white cable connector to the connector on the right side.

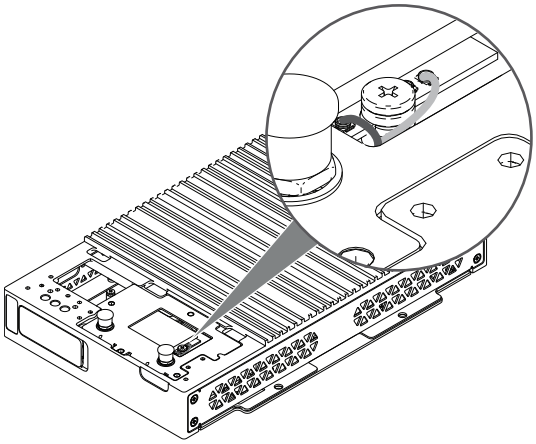

13. Fix the 4G module bracket on the product and tighten with M3 screws.

    NOTE: The necessary torque is 0.3 N•m (2.7 lb-in).

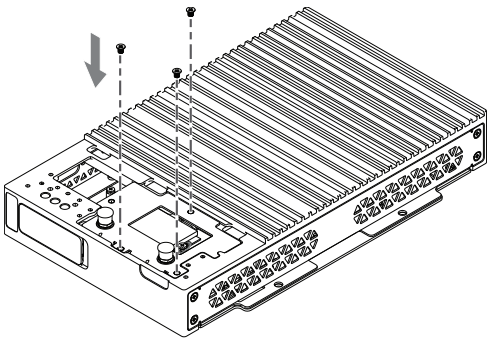

14. Place the optional interface cover on the Box Module.

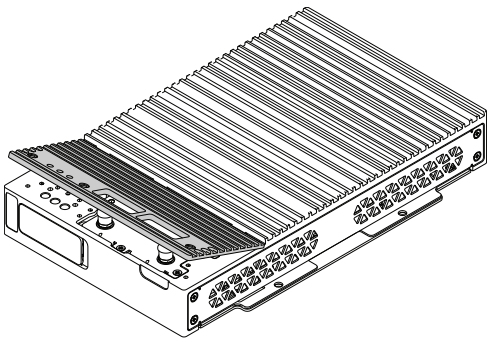

15. Secure the optional interface cover on the Box Module with the screws.

    NOTE: The necessary torque is 0.3 N•m (2.7 lb-in).

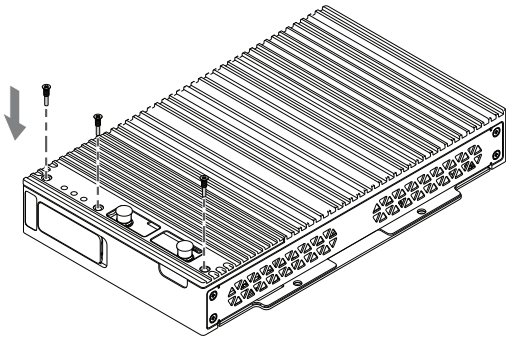

16. Attach the antenna only after mounting the product on the panel.

    Do not block the antenna area with your hand, body or other objects. It may cause interference in communications.

    You can change the direction of antennas, up, down, left and right.

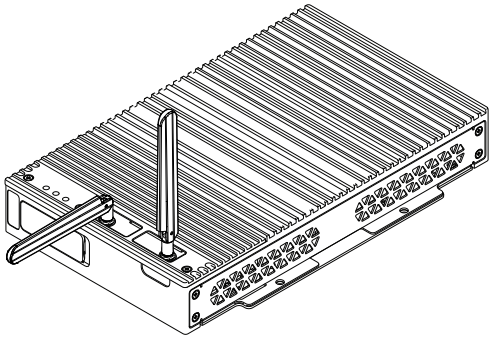

    You can attach the antenna to the outside of the panel using the following optional cable.

    4G Cellular extended antenna cable (3 m): HMIYP6CB4G3M

    When the optional cable is used, the dimensions of the panel opening are as follows.

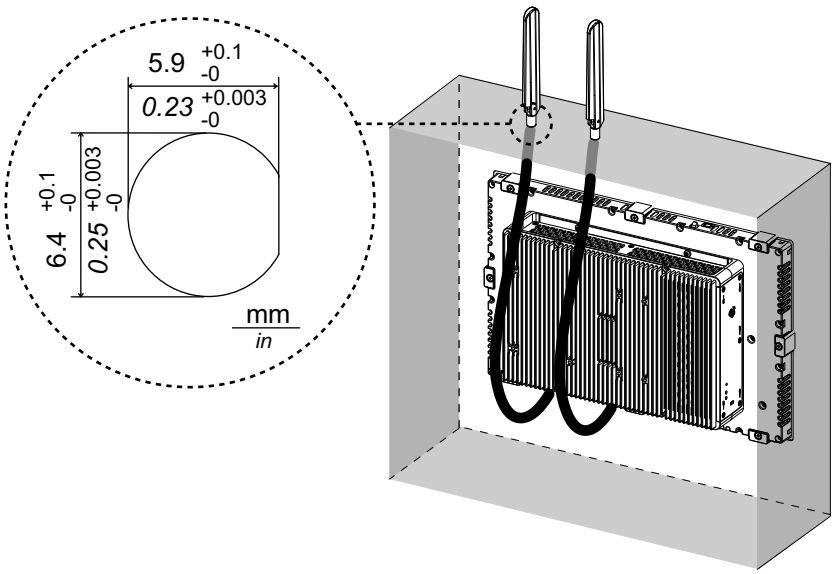

USB Type A/Type C Cable Clamp

Attaching USB Cable Clamp

When using a USB device, attach a USB cable clamp to the USB interface to prevent the USB cable from being disconnected.

⚠WARNING

EXPLOSION HAZARD

- Verify the power, input, and output (I/O) wiring are in accordance with Class I, Division 2 wiring methods.
- Do not use this product in hazardous environments or locations other than Class I, Division 2, Groups A, B, C, and D.
- Substitution of any components may impair suitability for Class I, Division 2.
- Do not disconnect equipment while the circuit is live or unless the area is known to be free of ignitable concentrations.
- Remove power before attaching or detaching any connectors to or from this product.
- Ensure that power, communication, and accessory connections do not place excessive stress on the ports. Consider the vibration in the environment when making this determination.
- Securely attach power, communication, and external accessory cables to the panel or cabinet.
- Use only commercially available USB cables.
- Use only non-incendive USB configurations.
- Confirm that the USB cable has been attached with the USB cable clamp before using the USB interface.

Failure to follow these instructions can result in death, serious injury, or equipment damage.

NOTE: Watch your fingers. The edge of the clip is sharp.

1. For USB Type A, mount the clip to the USB mark on the USB connector shell so that it overlaps. For both USB Type A and USB Type C, the clip matches a length of 27 to 43.5 mm (1.06 to 1.71 in) for the USB cable connector.

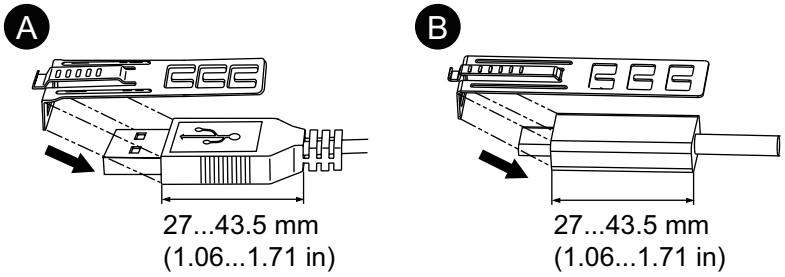

A. USB Type A

B. USB Type C

2. Align the clip and the USB cable connector shell. Adjust the position of the holes where the clip is attached. To ensure stability, select the clip-hole position that is closest to the base of the connector shell.

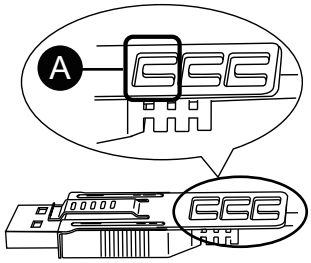

A. Pass the tie through here.

3. As shown, pass the tie through the clip hole. Next, turn the tie and pass it through the head so that the USB cable can pass through the center of the tie loop. The clip is now attached to the USB cable.

NOTE:

- Check the direction of the head beforehand. Make sure the USB cable is through the center of the tie loop and that the tie can pass through the head.
- You can substitute the tie provided with HMIZCCLUSA or HMIYP6CLUSC, or other commercially available ties with a width of 4.8 mm (0.19 in) and thickness of 1.3 mm (0.05 in).

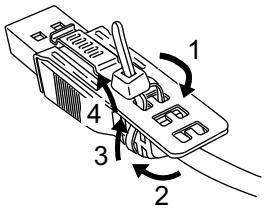

4. While pressing the grip on the clip, insert the cable from step 3 all the way into the USB host interface. Make sure that the tab of the clip is secured to the USB cable attached to this product.

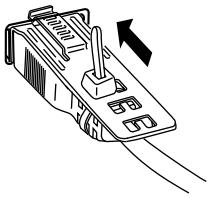

Removing USB Cable Clamp

1. For USB Type A, when USB cables with the clamps are connected to both the upper port and lower port, remove the cable with the clamp from the upper port.

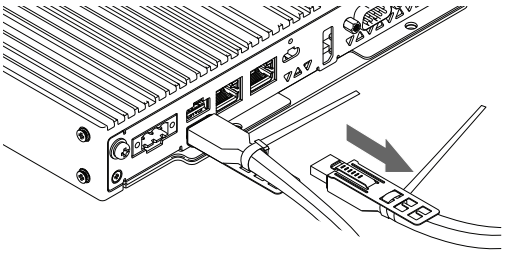

2. Loosen the cable tie of the USB clamp in the lower port.

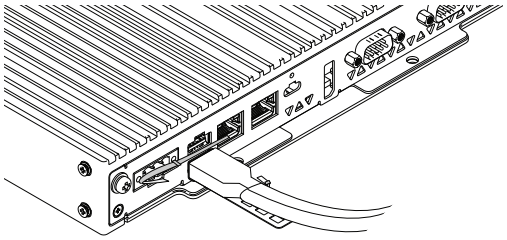

3. Remove the cable.

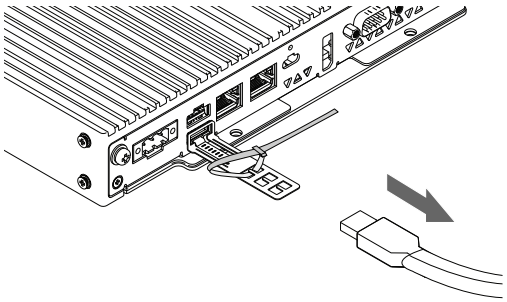

4. Remove the USB clamp.

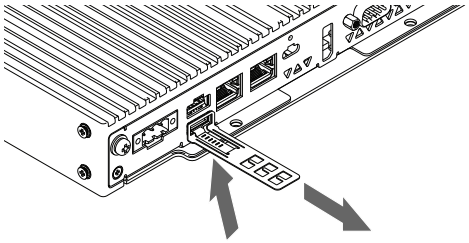

NOTE: For USB Type C, simply remove the USB cable while pushing the grip section of the clip.

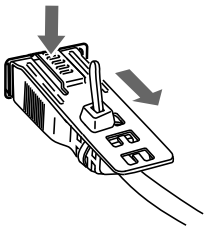

Front USB Cover

Opening the Front USB Cover

The front surface is rated for IP66F, IP67F, UL 50/50E, Type 1, Type 4X (indoor use only) and Type 13 enclosure, but when the front USB cover is open, the front surface is rated for UL 50/50E and Type 1 enclosure.

NOTE: IP66F and IP67F are not part of UL certification.

⚠ CAUTION
RISK OF INJURY When opening the Front USB Cover, be careful not to injure your fingers. **Failure to follow these instructions can result in injury or equipment damage.**

NOTICE

BROKEN ENCLOSURE

Do not exert more torque than the amount specified.

Failure to follow these instructions can result in equipment damage.

1. Loosen the screws on the top of the front USB cover with a screwdriver.

   NOTE: The necessary torque is 0.5 N•m (4.4 lb-in).

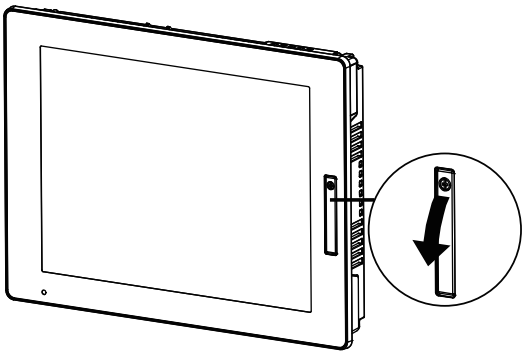

2. The USB interface can be seen once you pull out the front USB cover.

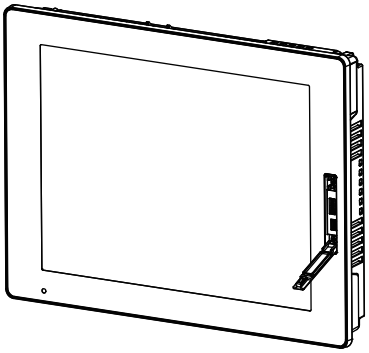

Maintenance

What's in This Chapter

Regular Cleaning 116
Periodic Check Points 116
Replacing the Display Module 117
Replacing the Installation Gasket 119
Replacing the Battery and the Backlight 120

Regular Cleaning

Cleaning this product

NOTICE
EQUIPMENT DAMAGE • Power off this product before cleaning it. • Do not use hard or pointed objects to operate the touch panel. • Do not use paint thinner, organic solvents, or a strong acid compound to clean the unit. **Failure to follow these instructions can result in equipment damage.**

When this product gets dirty, wipe this product with a soft, dry cloth or a soft cloth soaked in only water and wrung tightly.

NOTE: When the product is very dirty, soak the soft cloth in water with a neutral detergent, wring the cloth tightly and wipe the product while avoiding the product label.

Periodic Check Points

Operation Environment

- Is the ambient air temperature within the allowable range? Refer to Environmental Specifications, page 29.
- Is the ambient air humidity within the specified range? Refer to Environmental Specifications, page 29.

When this product is inside a panel, the ambient environment refers to the interior of the panel.

Electrical Specifications

- Is the input voltage appropriate? Refer to Electrical Specifications, page 27.
- Are all power cords and cables connected properly? Are there any loose cables?
- Are all installation fasteners holding the unit securely?
- Are there scratches or traces of dirt on the installation gasket?

Unit Disposal

When disposing this product, dispose it in a manner appropriate to, and in accordance with, your country's industrial machinery disposal/recycling standards.

Replacing the Display Module

Introduction

When using the Panel Type, you can replace the Display Module with the same display type.

- The following settings are stored on the Display Module. If you replace the Display Module with a new one, these settings return to their factory default settings. For setting up again, refer to Launcher, page 126. You can also set the brightness in the Windows® settings.
  - Buzzer
  - Brightness
  - Calibration
  - Front USB
  - Touch Mode
- When replacing the Display Module, the brightness previously set may not be reflected correctly. After replacing the Display Module, restart the product twice before use.
- When the window display position is saved with Window Locker, replacing the Display Module could cause the window to display incorrectly. After replacing the Display Module, save the display position again with Window Locker.

⚠⚠DANGER

HAZARD OF ELECTRIC SHOCK, EXPLOSION, OR ARC FLASH

- Remove all power from the device before removing any covers or elements of the system, and prior to installing or removing any accessories, hardware, or cables.
- Unplug the power cable from both this product and the power supply prior to installing or removing the product.
- Always use a properly rated voltage sensing device to confirm power is off where and when indicated.
- Replace and secure all covers or elements of the system before applying power to this product.
- Use only the specified voltage when operating this product. This product is designed to use 12 to 24 Vdc. Always check whether your device is DC powered before applying power.

Failure to follow these instructions will result in death or serious injury.

Removing the Display Module from the Box Module

⚠CAUTION

RISK OF INJURY

Do not drop the Box Module when you remove it from the Panel Type.

- Hold this product in place after removing the screws.
- Use both hands.

Failure to follow these instructions can result in injury or equipment damage.

1. Place the Panel Type on a clean and level surface with the screen facing down.
2. Remove the screws (4 pieces) on the rear face, then remove the Box Module.

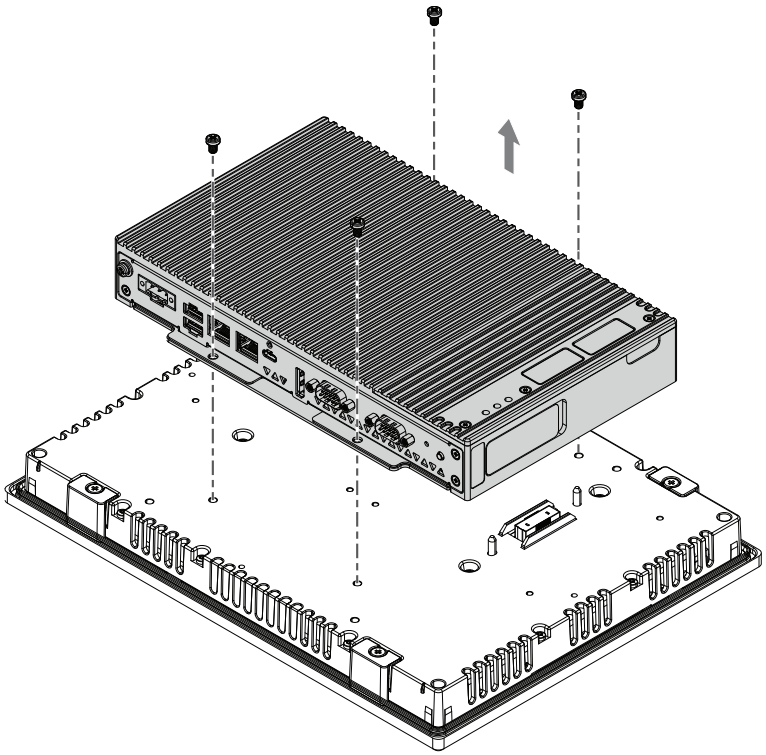

Installing the Display Module on the Box Module

NOTICE

BROKEN ENCLOSURE

Do not exert more torque than the amount specified.

Failure to follow these instructions can result in equipment damage.

1. Place the Display Module on a clean and level surface with the screen facing down.

2. Cover the Box Module so that its outline fits in the appropriate guidelines and you can enter the mounting pins through the holes.

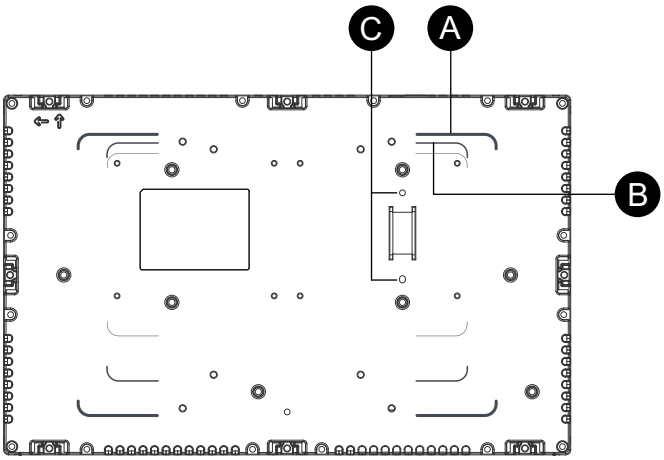

A. Advanced Box guideline
B. Standard Box/Basic Box guideline
C. Installation pins

3. Tighten the M4 screws (4 pieces) to attach the Box Module.

   NOTE: The necessary torque is 0.7 N•m (6.2 lb-in).

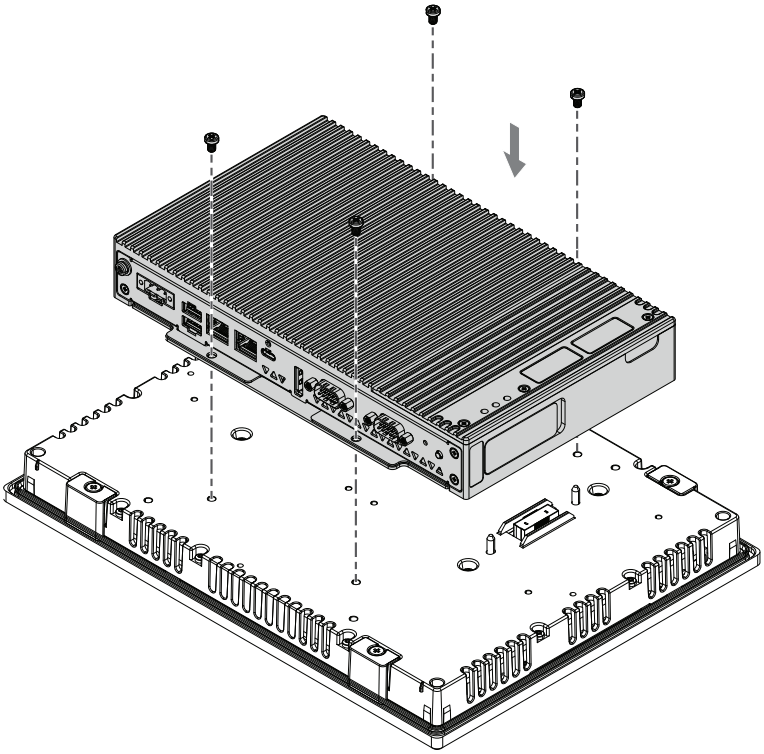

Replacing the Installation Gasket

Introduction

The installation gasket provides protection against dust and moisture. The gasket must be inserted correctly into the groove for moisture resistance for the Panel Type.

NOTICE

GASKET AGING

- Inspect the gasket periodically as required by your operating environment.
- Replace the gasket at least once a year, or as soon as scratches or dirt become visible.

Failure to follow these instructions can result in equipment damage.

NOTICE

EQUIPMENT DAMAGE

Be careful not to stretch the gasket unnecessarily.

Failure to follow these instructions can result in equipment damage.

Installing the Installation Gasket

1. Place the Panel Type on a flat, level surface, with the display face pointing down.
2. Remove the gasket from the Panel Type.
3. Attach the new gasket to the Panel Type. Insert the protrusions from the four corners of the gasket into the corresponding holes in the corners of the Panel Type.

   Depending on your model, there may be additional protrusions. In the following, refer to the figure on the right and insert the protrusions accordingly.

   NOTE: When using a tool to insert the gasket, make sure the tool does not catch the rubber gasket and cause a tear.

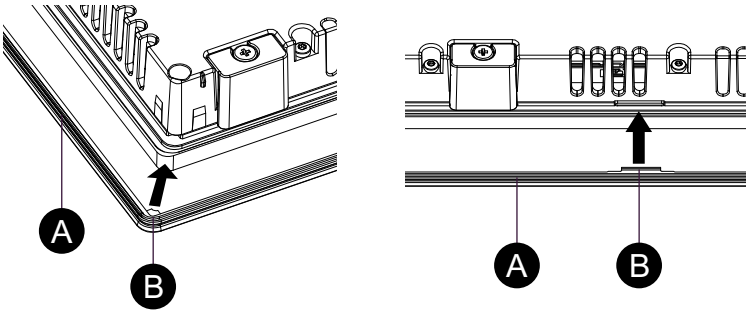

A. Installation gasket

B. Protruding point

Replacing the Battery and the Backlight

Not user replaceable. Please contact your local distributor.

Cybersecurity

What's in This Chapter

Cybersecurity Guideline..... 121

Cybersecurity Guideline

Use this product inside a secure industrial automation and control system. Total protection of components (equipment/devices), systems, organizations, and networks from cyber attack threats requires multi-layered cyber risk mitigation measures, early detection of incidents, and appropriate response and recovery plans when incidents occur. For more information about cybersecurity, refer to the Harmony HMI/iPC Cybersecurity Guide.
https://www.se.com/ww/en/download/document/EIO0000004948/

⚠ WARNING

POTENTIAL COMPROMISE OF SYSTEM AVAILABILITY, INTEGRITY, AND CONFIDENTIALITY

- Change default passwords at first use to help prevent unauthorized access to device settings, controls and information.
- Disable unused ports/services and default accounts, where possible, to minimize pathways for malicious attacks.
- Place networked devices behind multiple layers of cyber defenses (such as firewalls, network segmentation, and network intrusion detection and protection).
- Apply the latest updates and hotfixes to your Operating System and software.
- Use cybersecurity best practices (for example: least privilege, separation of duties) to help prevent unauthorized exposure, loss, modification of data and logs, interruption of services, or unintended operation.

Failure to follow these instructions can result in death, serious injury, or equipment damage.

System Function Settings

What's in This Chapter

Main Features 122
At First Startup 122
Windows Update 123
UEFI BIOS 124
Launcher 126
System Monitor 138
TPM 140
Trellix Software 141
System Backup 143
System Recovery 147
API 152

Main Features

Multilanguage Support

The operating system is installed with the following languages.

English (default), Japanese, French, German, Spanish, Italian, Portuguese, Russian, Swedish, Simplified Chinese and Traditional Chinese.

UEFI BIOS

This product is equipped with the UEFI BIOS. Refer to UEFI BIOS, page 124.

Launcher

Utility that displays icons for registered files, programs, and various settings, which you can start with a simple touch operation. You can use the Launcher for Write Filter and HORM settings. Refer to Launcher, page 126.

System Monitor

A system monitor using a Node-RED dashboard sample is provided for this product. You can monitor your system with this dashboard. You can also build your own system monitor by editing the flow and creating your own dashboard. Refer to System Monitor, page 138.

Security Support

Secure Boot is enabled on this product. Additionally, as TPM comes as part of this product, it can easily support an encryption tool, BitLocker. Furthermore, by purchasing a Trellix license you can realize a more secure environment. Refer to TPM, page 140 and Trellix Software, page 141.

NOTE: Enable BitLocker to make your system more secure.

At First Startup

The first time you start up the product, the initial settings for the operating system is executed. Connect a keyboard and mouse before powering up, then follow the on-screen instructions to define the settings.

NOTE:

This product requires the sign-in password to be set in order to reduce the risks of unauthorized access, intrusion and infection of malicious software. The conditions for the sign-in password are as follows.

No. of characters: From the usable characters below, at least 3 types and at least 8 characters are required. The sign-in password should not contain the character strings used in the account name.

Usable characters:

- Uppercase letters of European languages (A through Z, with diacritic marks, Greek and Cyrillic characters)
- Lowercase letters of European languages (a through z, sharp-s, with diacritic marks, Greek and Cyrillic characters)
- Base 10 digits (0 through 9)
- Non-alphanumeric characters (special characters): (~!@#$%^&*_-+=`|\(){}[]:;"'<>,.?/) Currency symbols such as the Euro or British Pound are not counted as special characters for this policy setting.
- Any Unicode character that is categorized as an alphabetic character but is not uppercase or lowercase. This includes Unicode characters from Asian languages.
- It is not possible to recover a lost username and password.

⚠ CAUTION

EQUIPMENT DAMAGE

Regardless of the Write Filter setting, do not turn off the power immediately after turning on the product.

Failure to follow these instructions can result in injury or equipment damage.

NOTICE

LOSS OF DATA

Do not turn off the power during initial setup.

Failure to follow these instructions can result in equipment damage.

NOTICE

ACCESS LOSS

Store your device's username and password information in a secure location.

Failure to follow these instructions can result in equipment damage.

Windows Update

To use this product more safely, use Windows Update to keep the operating system up to date. Windows Update is disabled in the factory default settings. For the procedure on how to enable, refer to the following URL.
http://hmi.schneider-electric.com/trans/en/product/1.html

UEFI BIOS

UEFI BIOS Setup Menu

To enter the UEFI BIOS setup menu:

1. Turn on the product.
2. While the boot screen is displayed, press either the [DEL] or [ESC] key.
3. Enter the password (default password: Pw#12345)[*1].
4. The BIOS screen will display.

[*1] Make sure you change the default password. Refer to Changing the UEFI BIOS Password, page 124.

Depending on the settings, such as Fast Boot, you may not be able to enter the BIOS setup menu using the above procedure. If that is the case, display the setup menu using the following steps.

1. Turn on the product and start up normally.
2. Select the **Settings** button.

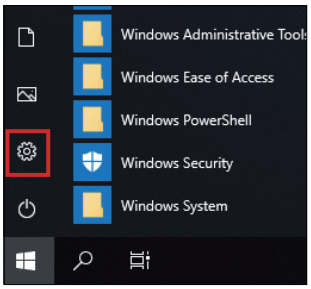

3. Select **Update & Security**.
4. Select **Recovery**.
5. From **Advanced startup**, select **Restart now**.
6. Select **Troubleshoot**.
7. Select **Advanced options**.
8. Select **UEFI Firmware Settings**.
9. Select **Restart**.
10. Enter the password (default password: Pw#12345)[*1].

[*1] Make sure you change the default password. Refer to Changing the UEFI BIOS Password, page 124.

Changing the UEFI BIOS Password

For security reasons, make sure you change the default password (Pw#12345). The following describes the procedure for changing the password.

NOTE: The password requires at least 8 characters.

1. Display the BIOS screen. Refer to UEFI BIOS Setup Menu, page 124.
2. Select **Security**.
3. Select **Administrator Password**.
4. The **Enter Current password** dialog box appears. Enter the current password.
5. The **Create New Password** dialog box appears. Enter the new password.

6. The **Confirm New Password** dialog box appears. Enter the same password as step 5.
7. Press the [F4] key.
8. Select **Yes** in the **Save & Exit Setup** dialog box.
9. The product is restarted.

Settings of Serial Interfaces on Box Module

The following describes how to configure the serial interfaces on Box Module. You can also switch the communication method on each serial port on Box Module by the following procedure.

1. Display the BIOS screen. Refer to UEFI BIOS Setup Menu, page 124.
2. Select **Advanced > Super IO Configuration > Serial Port 1** or **Serial Port 2**.
3. Select **Enabled** or **Disabled** in **Serial Port** (default: **Enabled**).
4. Select a communication method in **Mode Selection** (default: **RS485**).
5. When a communication method is selected, the subsequent menu changes depending on the selection. The following table shows options and default, and the menu appearing when the option in **Mode Selection** is selected.

   [When RS-485 is selected]

Echo Cancel	**Disabled**	
	Enabled	Default

   Echo Cancel: Setting of whether or not to receive the data sent by itself (Echo) in a two-wire (half-duplex) communication. The default setting is **Enabled** (not to receive).

   [When RS-422 is selected]

Operation Mode	**HMI**	
	Normal	Default

   HMI mode: The mode when communicating with external devices, such as PLC, using the control signals of RS-422 (ERA/ERB, CSA/CSB) on Box Module via HMI runtime. These control signals of RS-422 are available only in this mode.

   Normal mode: When using as a general RS-422 that uses only data signals (SDA/SDB, RDA/RDB). The control signals (ERA/ERB, CSA/CSB) cannot be used in this mode.

   [When RS-232 is selected]

   No subsequent menu appears.

6. Press the [F4] key.
7. Select **Yes** in the **Save & Exit Setup** dialog box.
8. The product is restarted.

In-Band ECC

The CPU in this product supports In-Band ECC. The following describes the procedure for enabling and disabling In-Band ECC (default: **Disabled**).

1. Display the BIOS screen. Refer to UEFI BIOS Setup Menu, page 124.
2. Select **Advanced > CPU Configuration > In-Band ECC**.
3. Select **Enabled** or **Disabled**.
4. Press the [F4] key.
5. Select **Yes** in the **Save & Exit Setup** dialog box.
6. The product is restarted.

Turbo Mode

The CPU installed in this product is equipped with Intel® Turbo Boost Technology. You can increase the processing speed of your application by enabling Turbo Mode with the following settings.

1. Display the BIOS screen. Refer to UEFI BIOS Setup Menu, page 124.
2. Select **Advanced > CPU Configuration > EIST** (default: **Disabled**)
3. Select **Enabled**.
4. After selecting **Enabled**, **Turbo Mode** menu appears. (default: **Disabled**).
5. Select **Enabled**.
6. Press the [F4] key.
7. Select **Yes** in the **Save & Exit Setup** dialog box.
8. The product is restarted.

Launcher

Starting the Launcher

The Launcher is a utility that you can set up to start programs and settings. The Launcher allows for convenient touch-screen operation by displaying icons for registered various settings.

You can start the Launcher from the shortcut icon on the desktop.

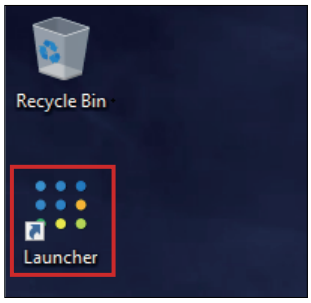

Launcher top screen

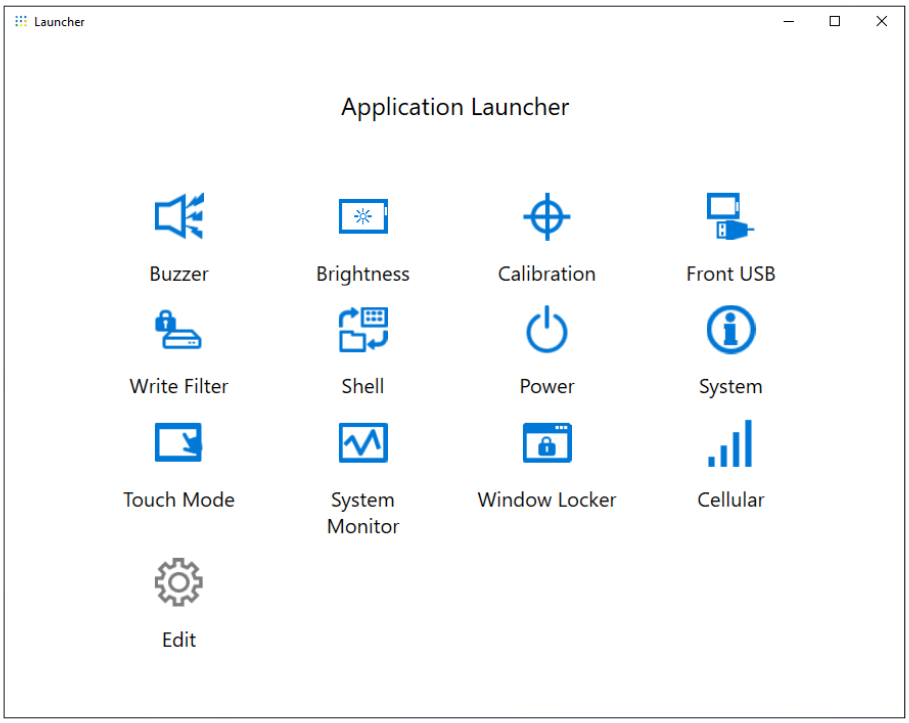

NOTE:

- To customize the Launcher, refer to Edit, page 136.
- Download the latest version of the Harmony P6 and Harmony FP6 Utility from the following URL to keep the Launcher up to date.
  www.se.com/ww/en/download
- When the Launcher is already installed, it is overwritten. If you used **Edit** to customize the Launcher, customize again.
- The **Recovery USB** icon appears only on Windows 11. Refer to Recovery USB (Windows 11 Only), page 137.
- The **System Monitor** icon appears on the Launcher only when the OS Base version is as follows.

  Windows 10 IoT Enterprise 2021 LTSC: OS Base 1.0

  Windows 11 IoT Enterprise 2024 LTSC: System Monitor not pre-installed

  If the icon does not appear on your product, download and install the latest System Monitor for the product from the following URL and refer to System Monitor, page 138.
  www.se.com/ww/en/download

Buzzer

Sets the sound on/off when you perform touch-panel operations.

Default: **On**

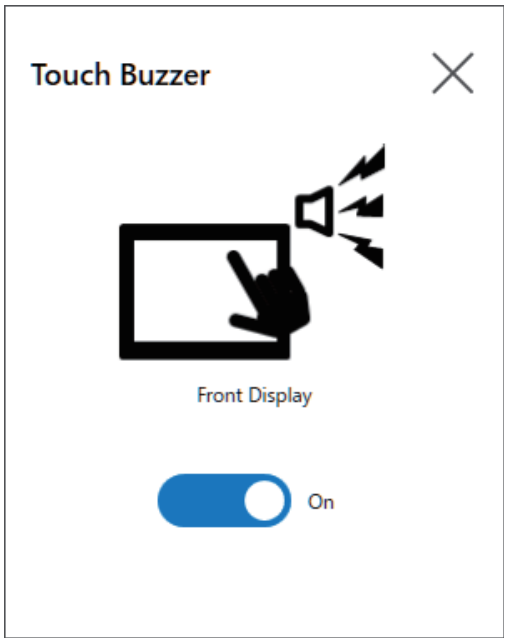

Brightness

Sets the backlight brightness.

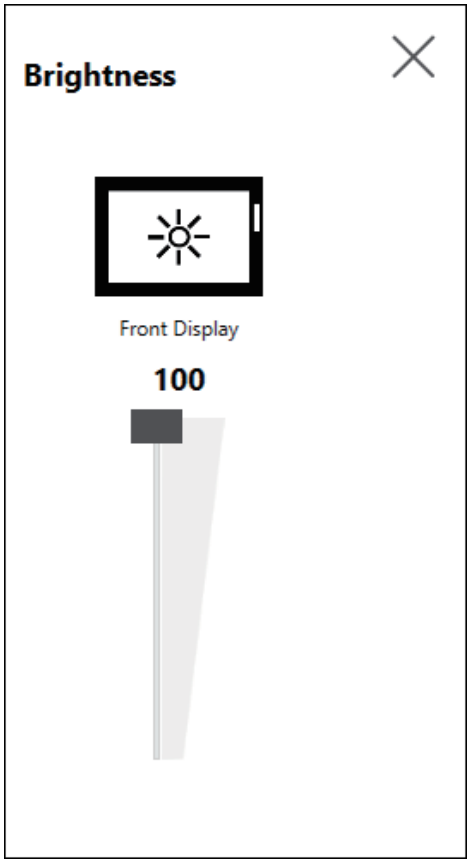

Calibration

Calibrates the touch coordinates.

NOTE:

- Do not calibrate using the Control Panel **Tablet PC Settings > Adjustment**. If touch panel calibration is required, use the calibration method shown here.
- Before running calibration, in the Windows display settings set the [Scale and layout] to 100% for the associated display. You cannot calibrate properly using other scaling settings.

Calibration screen instructions are different between analog resistive film and projected capacitive (P-CAP) displays. Perform calibration as per the screen instructions.

Analog resistive film display

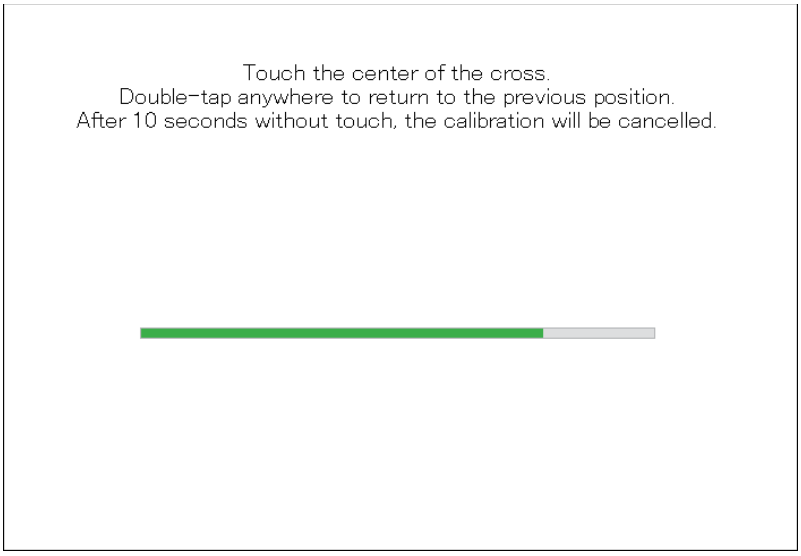

Projected capacitive display

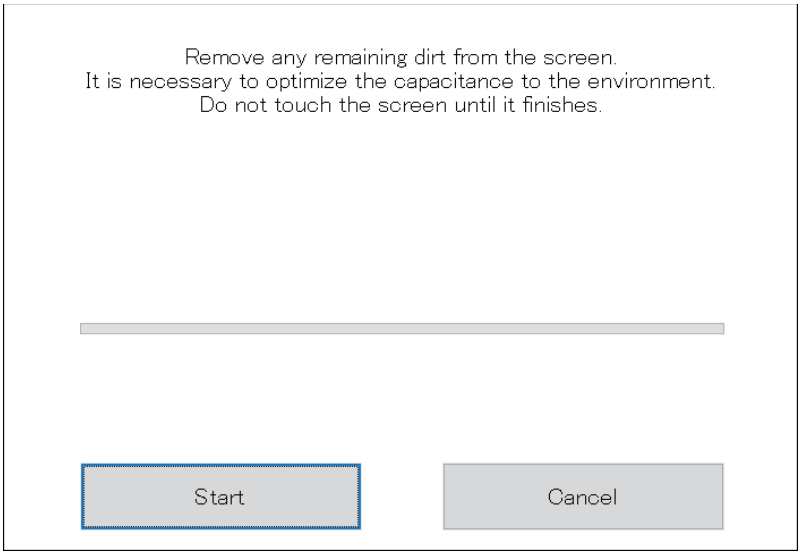

Front USB

Enables/disables the front USB port on the Display Module.

Default: **Off** (Disable)

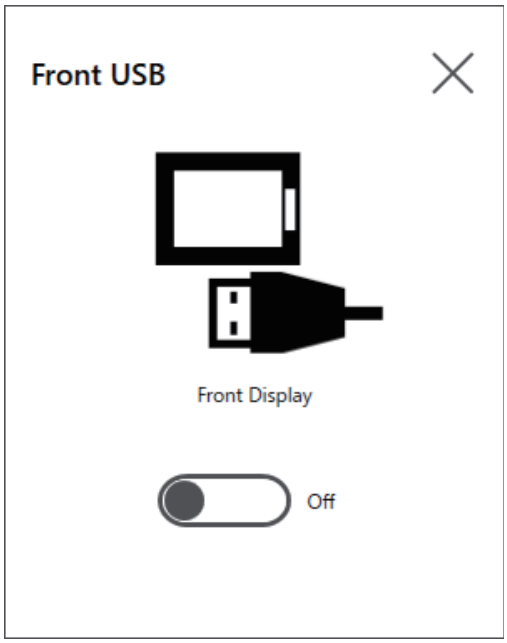

NOTE:

- If the front USB is enabled, the risk of unauthorized access and infection of malicious software increases. Disable the front USB after use.
- In models without a front USB port, this setting is disabled.

Write Filter

This function prevents writing to the system disk.

By enabling the Write Filter, you can prevent damage to the system disk and shortened life of disk due to excessive writes.

Default: **Off** (Disable)

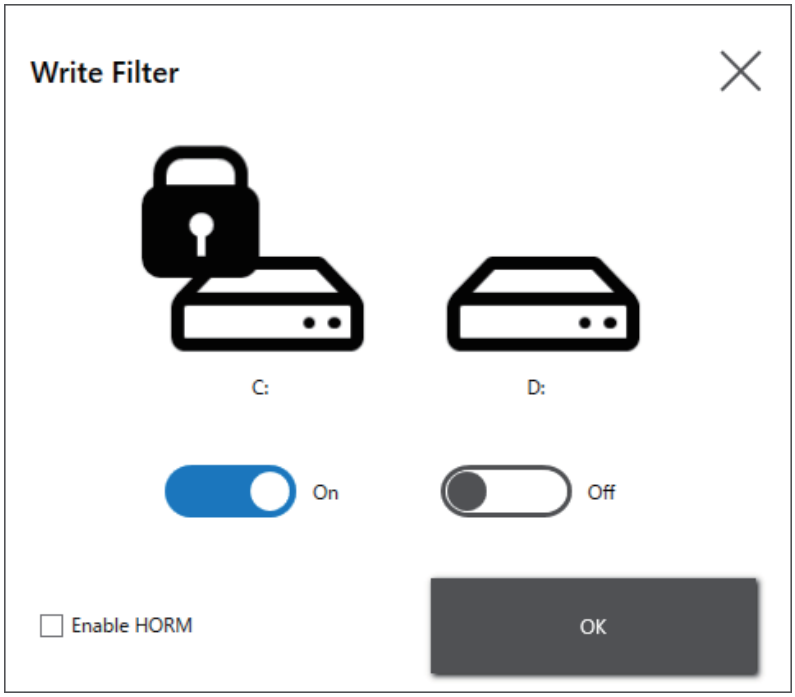

NOTE:

- When only one volume is set to the Write Filter, the screen displays just that one volume.
- When changing settings (such as settings in the Launcher, and when adding drivers, changing the registry, or installing applications), disable the Write Filter. If the Write Filter is enabled, any changes to settings will be erased when the operating system is restarted. After changes to settings are complete, we recommend that you re-enable the Write Filter.
- If the Write Filter is enabled, the fast startup function is disabled.

⚠CAUTION

EQUIPMENT DAMAGE

Regardless of the Write Filter setting, do not turn off the power immediately after turning on the product.

Failure to follow these instructions can result in injury or equipment damage.

NOTICE

LOSS OF DATA

Do not turn off the power while writing to a storage device that is not protected by the Write Filter.

Failure to follow these instructions can result in equipment damage.

HORM (Windows 10 Only)

This feature shortens the product's start time.

If you save a system state with HORM enabled, it is possible to restore the system to this saved state even after power to this product is turned off. If HORM is enabled, you need to enable the Write Filter as well.

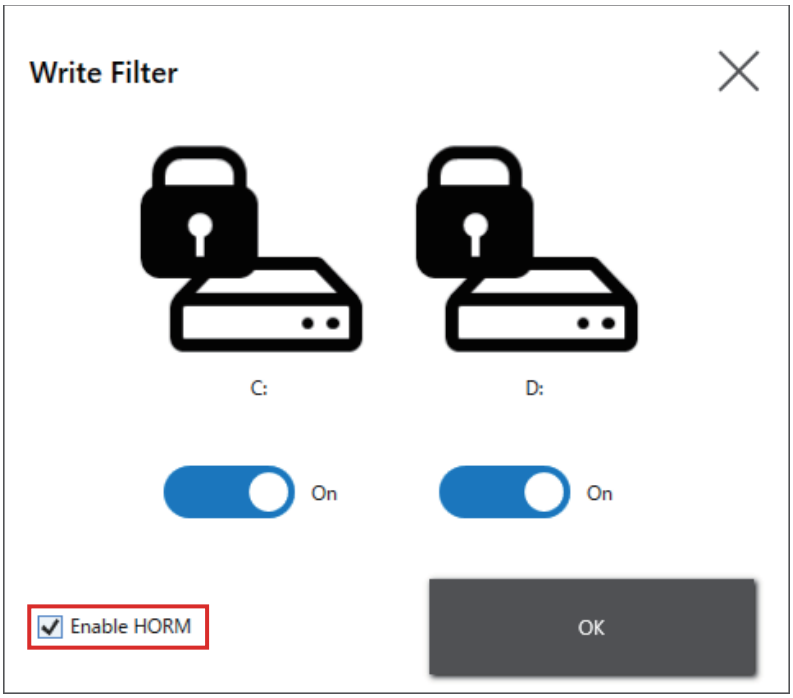

NOTE:

- Before setting up HORM, enable the Write Filter on all volumes.
- Removable disks except for the SD card inserted in the product are not supported for use with HORM. Before setting up HORM, detach all removable disks except for the SD card inserted in the product.
- When HORM is enabled, the LED on the Display Module turns orange right away, but turn off the power only after confirming the status LED on the Box Module has turned red.
- When HORM is enabled or immediately after hibernation, system backup or recovery will not run properly. Perform system backup or recovery after first disabling HORM and then shutting down the product.
- If a system configured at hibernation or with HORM enabled is stored on a system disk, do not use that system disk on a different Box Module unit.

⚠ CAUTION

EQUIPMENT DAMAGE

Regardless of the Write Filter setting, do not turn off the power immediately after turning on the product.

Failure to follow these instructions can result in injury or equipment damage.

NOTICE

LOSS OF DATA

Do not turn off the power while writing to a storage device that is not protected by the Write Filter.

Failure to follow these instructions can result in equipment damage.

Shell

You can hide the Windows® desktop by switching from the Explorer Shell to the Custom Shell.

Custom Shell: The Windows® desktop is not displayed.
Explorer Shell: The Windows® desktop is displayed.

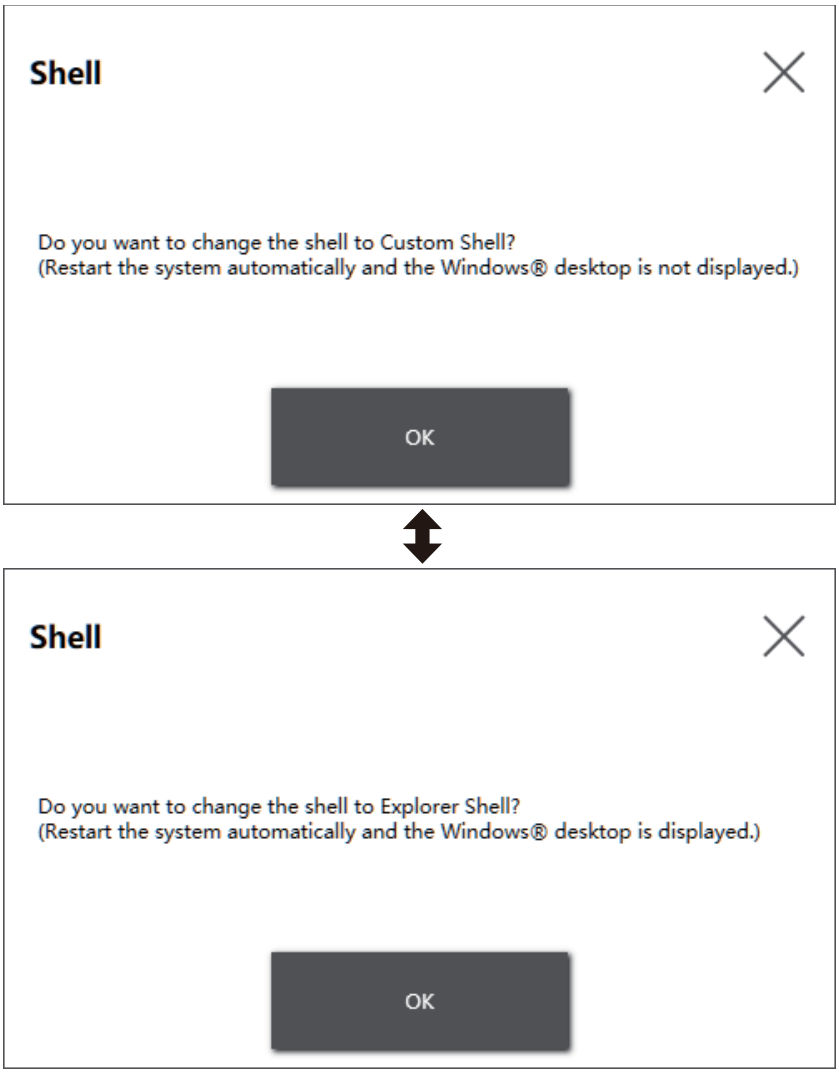

NOTE:

- Install applications in the Explorer Shell.
- When changing to the custom shell, the features shown in the Explorer Shell (such as Windows® desktop, Start menu, taskbar) cannot be used.

Power

Use this feature to operate the product's power supply.

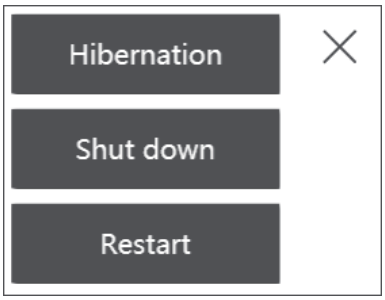

NOTE: With HORM enabled, using the Hibernation icon to hibernate the operating system will overwrite the previously saved state in HORM with the current system state. When you reboot the system, the system starts up in the state saved at hibernation. After that, even with HORM enabled if the power is shut off, the system returns to the state saved at hibernation.

System

Displays the version of the product firmware, BIOS, and operating system.

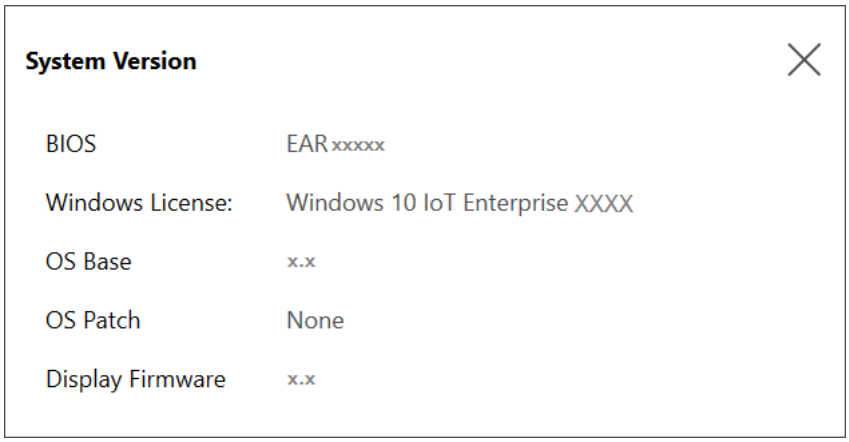

Touch Mode

The following three modes are available to support your usage environment. Select the mode according to your usage environment.

NOTE: This function is available only on the models with a projected capacitive touch panel.

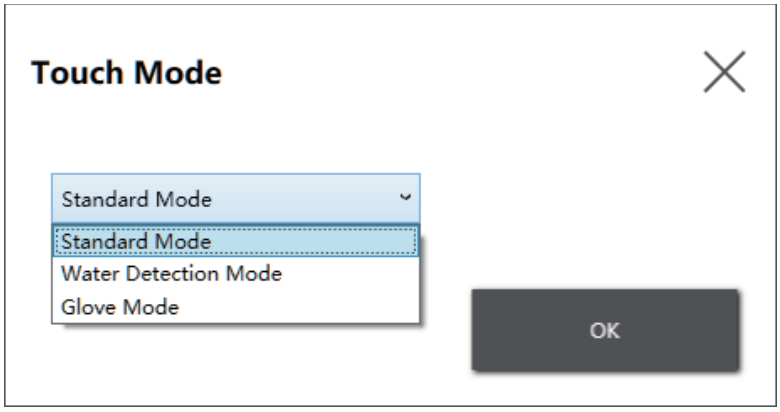

Standard Mode	Factory default. Suitable for touch operations using your finger.
Water Detection Mode	Mode where touch input becomes disabled when there are liquids, such as drops of water, on the screen. Suitable to prevent touch panel mis-operation due to liquids on the screen. After wiping the liquid or other foreign substance from the screen, touch input becomes enabled in about 2 seconds.
Glove Mode	Mode suitable for use with gloves, such as rubber gloves. **NOTE:** • Depending on the type of glove, operation may not be possible. • Because touch sensitivity is increased in this mode, it is more susceptible to environmental noise.

System Monitor

This icon displays the system monitor. For information, refer to System Monitor, page 138.

Window Locker

If for some reason the connection to the external display is disconnected, the displayed application window may move to a different position or to a different display altogether. By using the Window Locker, when applications start up you can display them in a fixed position, so that after reconnecting external displays you can view the application window in the same display and position as before being disconnected.

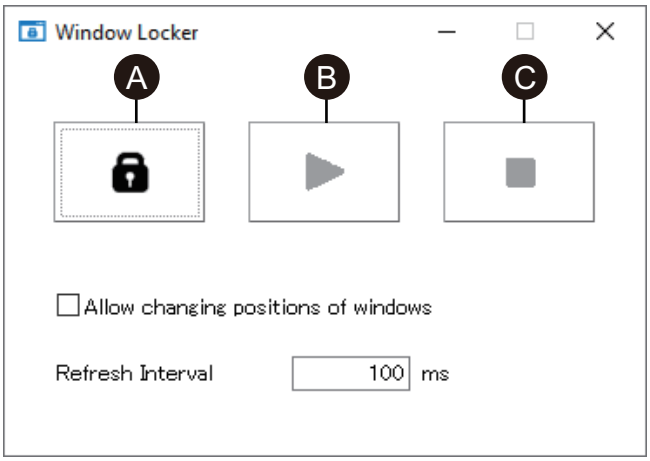

A. LOCK

B. PLAY

C. STOP

1. Start up all application windows to define their display positions and which display to use.

   NOTE: If you save the display position while the application is in full screen mode, the window may not display properly.

2. Move each window to the desired display position.
3. Run Window Locker from the Launcher.
4. Select **LOCK** to save the display position.

   NOTE:

   - Window sizes are fixed to the size when **LOCK** is pressed.
   - By entering an amount of time in the **Refresh Interval**, if you change the window size or position after **PLAY** is pressed, the window will return to its original size and position when the time elapses. If you select the **Allow changing positions of windows** check box, after **PLAY** is pressed, even when the entered time elapses the window will remain in the changed position, but the window will return to its original size.
   - The **Refresh Interval** input range is from 100 ms to 86,400,000 ms (24 hours).

5. Select **PLAY**. Every time the application window opens, it automatically appears in the saved position.

NOTE:

- When saving window positions, ensure that the Write Filter is disabled. If the Write Filter is enabled, the saved information will be erased when the operating system is restarted. After you finish saving, we recommend that you re-enable the Write Filter.
- To temporarily release the fixed position, select **STOP**. To return to the fixed position, select **PLAY**.
- After saving the window display position, connecting or disconnecting an external display loses the display positions. If you add a connection or disconnect, save the display position again. However, if you return to the same configuration as before connecting or disconnecting the external display, the saved display position information is applied so you do not have to set the display information again.
- You may not be able to normally save the display position of windows with the same name, or applications such as Windows® Media Player, which have multiple internal windows.
- After saving the window display position with Window Locker, changing the screen placement or resolution could cause the window to display incorrectly. If you change the screen settings, save the window display position again.

Cellular

You can use the optional interface unit and a SIM card to data communication using 3G, 4G, and LTE radio waves. Double-click this icon to open the Windows standard settings and make settings for data communication.

Edit

You can use this function to customize the icons displayed on the Launcher. You can also add any application to the display.

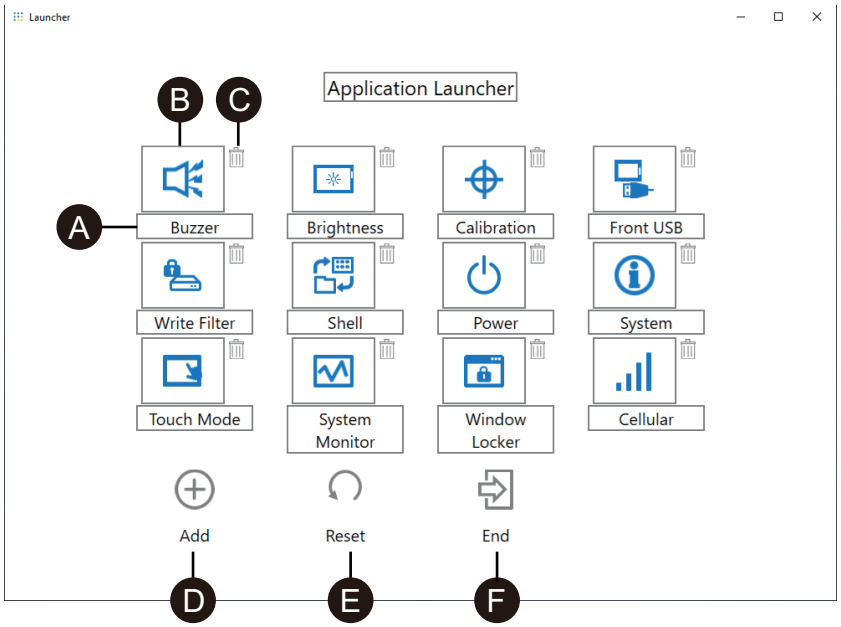

A. You can change the name of the icon.

B. You can change the application displayed. Click to display a screen where you can select the application's exe file. Select the exe file of the application you want to display.

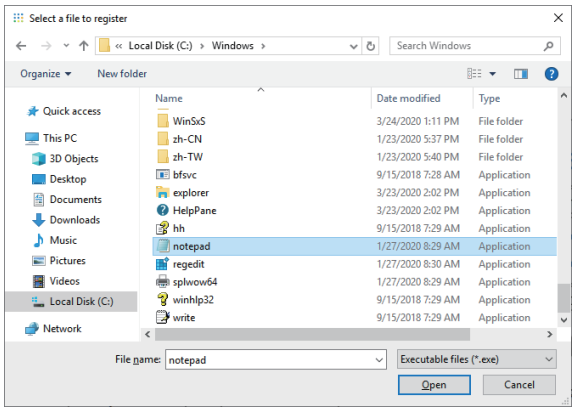

C. Click this mark to remove the icon.

D. Add the application displayed. Click to display a screen where you can select the application's exe file. Select the exe file of the application you want to display.

E. Returns the icon display to the factory default settings.

F. This button releases Edit mode.

Recovery USB (Windows 11 Only)

This feature is to create a recovery USB to restore and back up the system. During the creation of the recovery USB, the operating system image at the factory default is automatically stored in the USB. With this image, you can restore the factory default image, refer to System Recovery, page 147. If you need to back up your current system, refer to System Backup, page 143.

Prepare a commercially available USB memory with a size of 32 GB or more, to create a backup USB.

1. Disconnect all connected devices from the product.
2. Insert a commercially available USB memory.
3. Open the Launcher.
4. Select the **Recovery USB** icon.
5. Select the USB memory in **Select a USB storage device**.

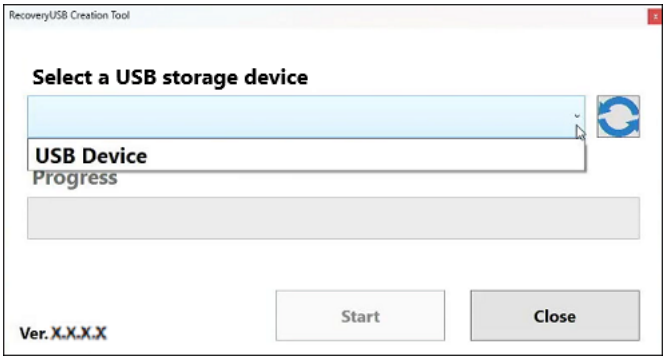

6. Select **Start**.

7. In the confirmation screen, select **OK**.

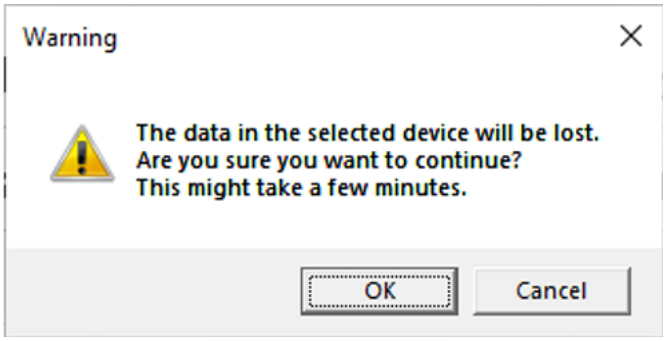

8. When completed, the following message appears and select **OK**.

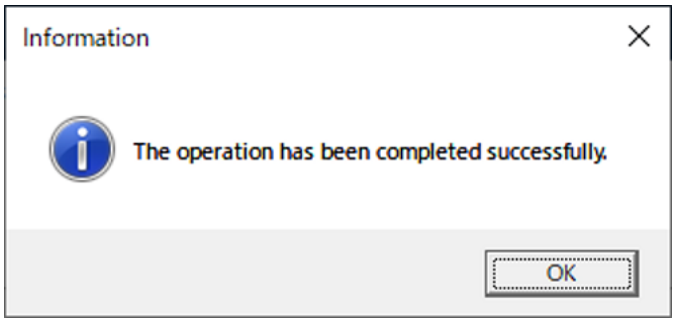

9. Close the **Recovery USB** screen.
10. After the operation, the drive labeled "Other label" is create in the USB. The operating system image at the factory default is stored in the folder named "Factory image" in the drive.

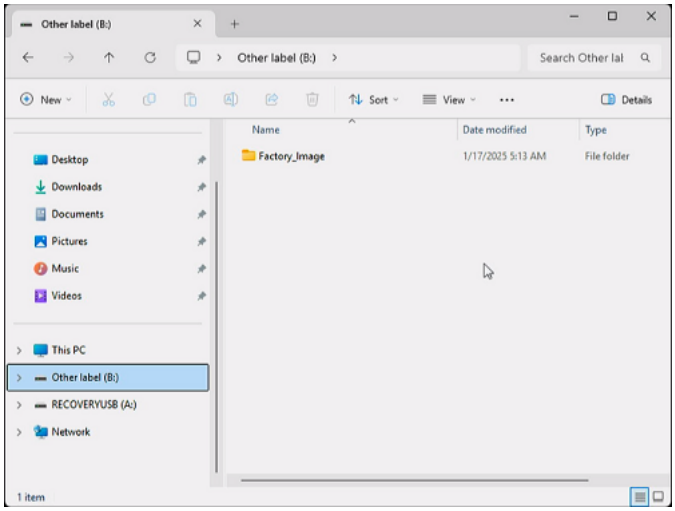

System Monitor

How to Run System Monitor

This product comes with our original system monitor-a dashboard created with Node-RED. You can run the system monitor from the System Monitor icon in the Launcher.

NOTE: The **System Monitor** icon appears on the Launcher only when the OS Base version is as follows.

Windows 10 IoT Enterprise 2021 LTSC: OS Base 1.0

Windows 11 IoT Enterprise 2024 LTSC: System Monitor not pre-installed

If the icon does not appear on your product, download and install the latest System Monitor for the product from the following URL and refer to System Monitor, page 138.
www.se.com/ww/en/download

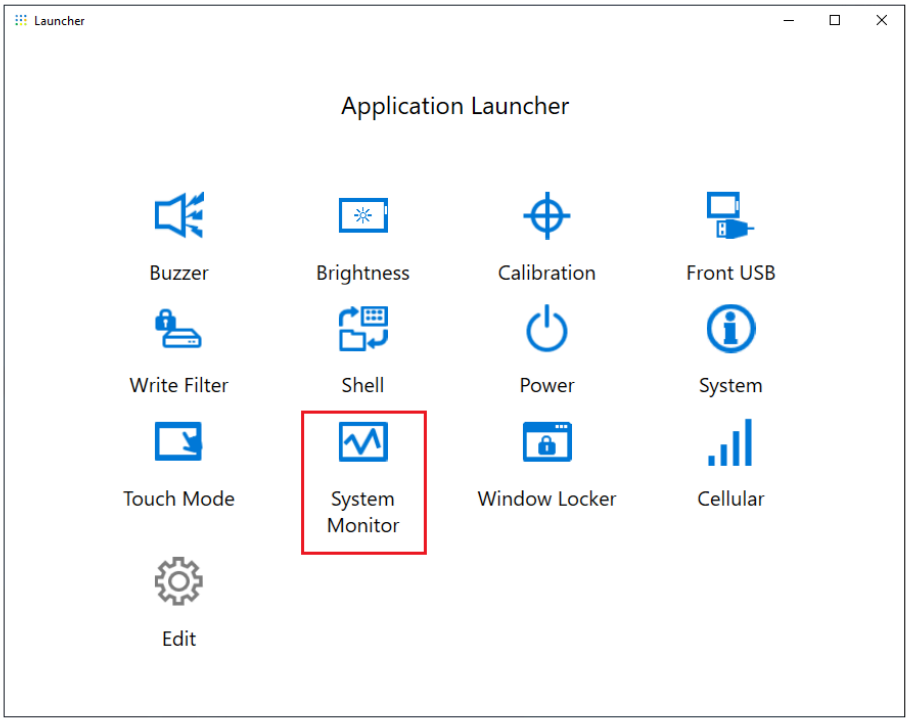

The first time System Monitor is started, the Microsoft Edge settings screen will appear. The Windows Security Alert screen will also appear. Select **Allow access** if you allow other computers on the network to use the dashboard; select **Cancel** if you do not.

NOTE: When deciding whether to allow access, keep security under careful consideration.

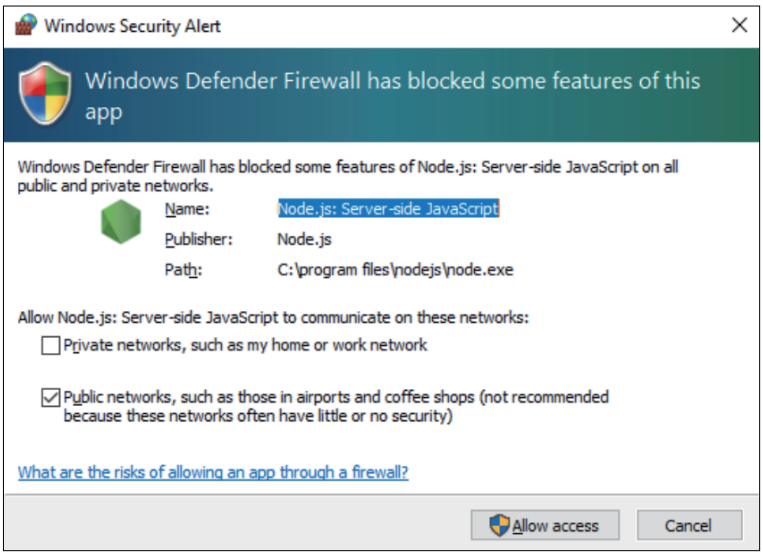

Node.js and Node-RED Update

Always use the latest versions of Node.js and Node-RED. For the procedure on installing the latest version, refer to the following URL.

http://hmi.schneider-electric.com/trans/en/product/1.html

Change Access Rights for Node-RED Related Files

To use Node-RED more safely, set so that using Node-RED related files requires Administrator rights. For the setup method, refer to the following URL.

http://hmi.schneider-electric.com/trans/en/product/1.html

Editing and Creating Dashboards

The latest version of the dashboard provided by us is published at the following URL. Download as required. You can also edit the dashboard or create a new one. For the editing process, refer to the following URL.

http://hmi.schneider-electric.com/trans/en/product/1.html

System Monitor API

The API is published on our website. For the file to download, refer to API, page 152.

TPM

This product comes equipped with the TPM 2.0 module.

Enable or disable TPM in accordance with the laws, regulations, and standards of each country.

TPM is enabled by default.

NOTE: Enable BitLocker to make your system more secure.

TPM Setup Process

1. Turn on the product.
2. To disable TPM, press [CTRL]+[D]; to enable TPM, press [CTRL]+[E].
3. After the setting is updated, the boot screen displays either **TPM Disabled** or **TPM Enabled**.

```
Press <DEL> or <ESC> to enter setup.
TPM Disabled.
Press F2 to reset system.
```

```
Press <DEL> or <ESC> to enter setup.
TPM Enabled.
Press F2 to reset system.
```

Trellix Software

Introduction

By purchasing the optional Trellix license (HMIYP6LSMCA) and using the Trellix software, you can increase the security on this product. For the software functions and how to use the software, refer to the following URL and search for the associated manual.
https://docs.trellix.com/bundle

The following describes how to install the software and search for the manual.

Installation

1. Insert the Trellix license USB storage to the product.
2. Run **setup.exe** in USB storage.
3. The installer is executed.

Searching for the Manual

The following describes how to search for the Trellix software manual. Check the software version beforehand.

1. Select the **Settings** button.

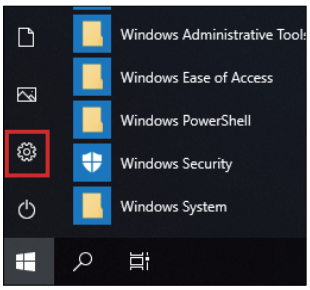

2. Select **App**.
3. In **Apps & features** on Windows 10, and in **Apps** on Windows 11, select **Trellix Solidifier**.

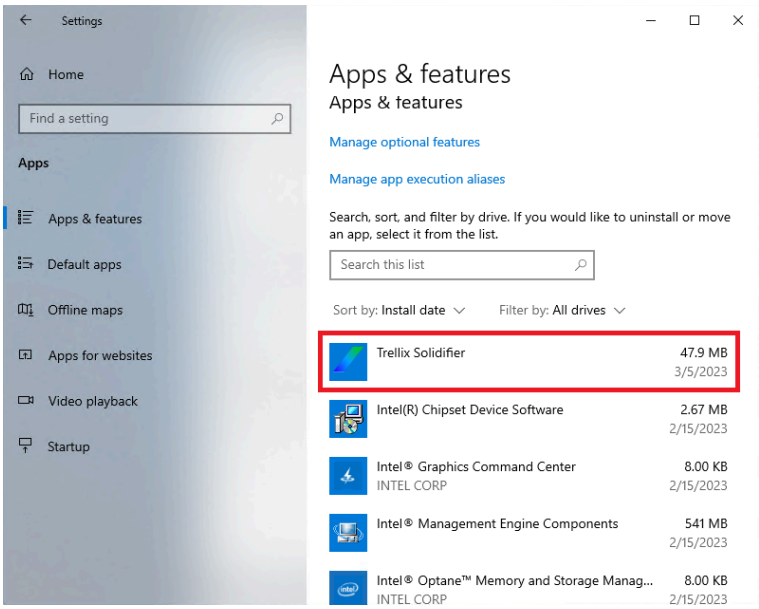

4. Confirm the version.

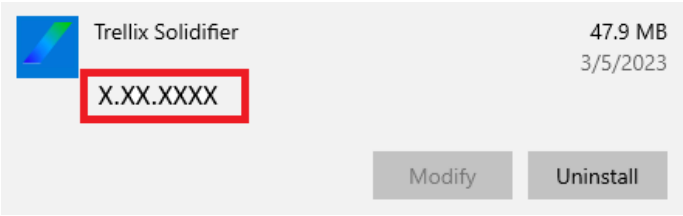

5. Close the **App** screen.
6. Display https://docs.trellix.com/bundle in the web browser.
7. Search for the **Application and Change Control** corresponding to the version confirmed in step 4.

   NOTE: The Trellix provided on our optional Trellix license USB storage supports an unmanaged environment (called standalone or selfmanaged) as defined by Trellix. It does not support a managed Trellix ePolicy Orchestrator - On-prem environment. Please be aware of this when reading the manuals.

Uninstallation

When uninstalling, you need to uninstall the following two applications.

- Trellix Solidifier
- Trellix Installer

Steps for uninstalling is as follows.

1. Select the **Settings** button.

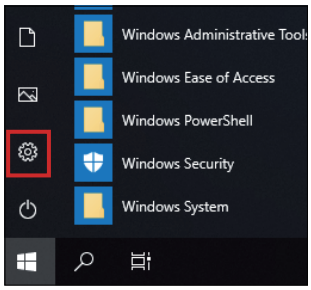

2. In **Apps & features** on Windows 10, and in **Apps** on Windows 11, select **Trellix Solidifier**.

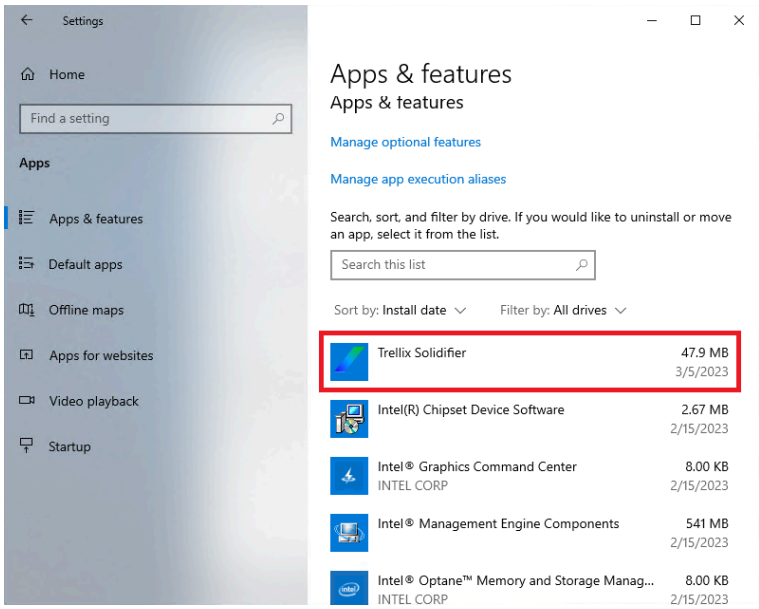

3. Select **Uninstall**.

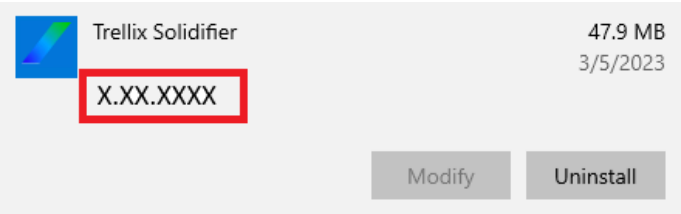

4. Follow the same steps and select **Trellix_Installer**, and then **Uninstall**.

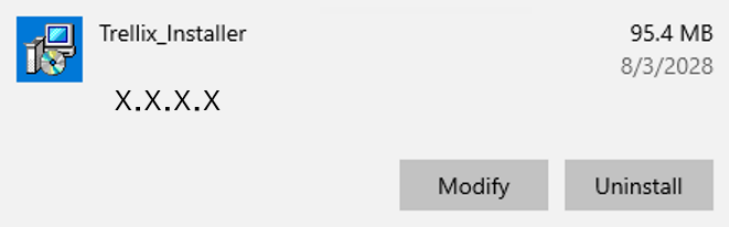

System Backup

Windows 10

After product setup, backing up the system is recommended. Prepare a commercially available USB memory with a size of 32 GB or more, to create a backup USB.

NOTE: When HORM is enabled or immediately after hibernation, system backup or recovery will not run properly. Perform system backup or recovery after first disabling HORM and then shutting down the product.

Creating the backup USB

1. Prepare a commercially available USB memory.
2. Use the Recovery USB Creation Tool to create a recovery USB. Download the Recovery USB Creation Tool from the following URL and create a recovery USB by following the instructions on the website.
   www.se.com/ww/en/download
3. Insert the recovery USB created with the Recovery USB Creation Tool into the product.
4. Turn on the product.
5. While the boot screen is displayed, press the [F7] key.
6. Enter the password (default password: Pw#12345).
7. From the following screen, select the recovery USB.

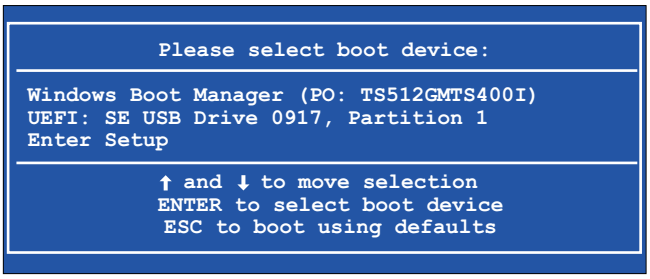

8. Select **Backup** > **OK**.

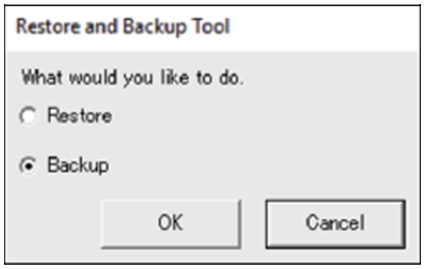

9. Select the disk to backup. Only C drive can be backed up. If several storage devices are shown in the dialog box, select the storage device of C drive. If there is only one storage device, the following screen does not appear and skip to step 10.

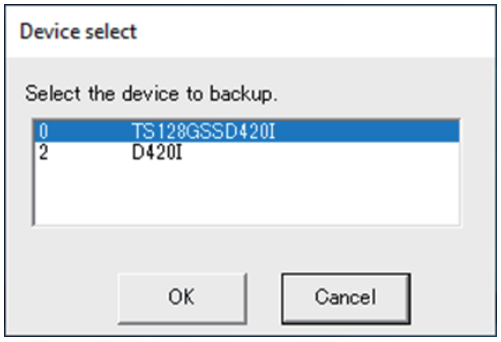

10. Select the drive labeled "Other label", enter a file name, and select either **Save** or **Open**.

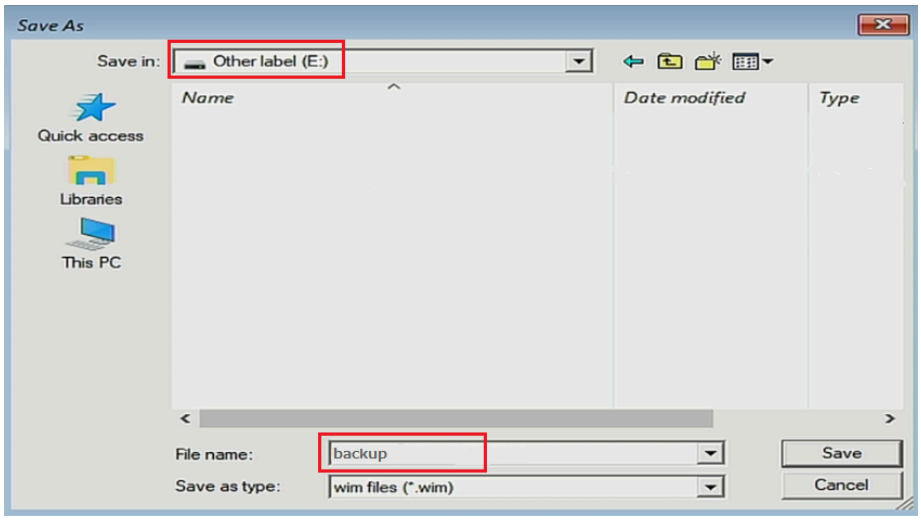

11. In the confirmation screen, select **OK**.

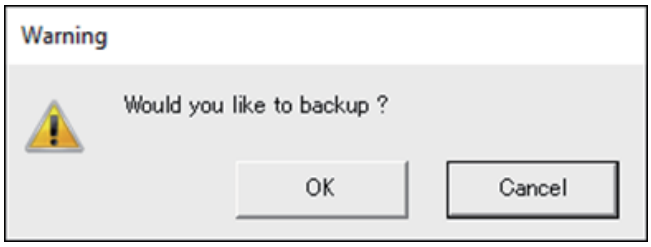

12. Backup begins.

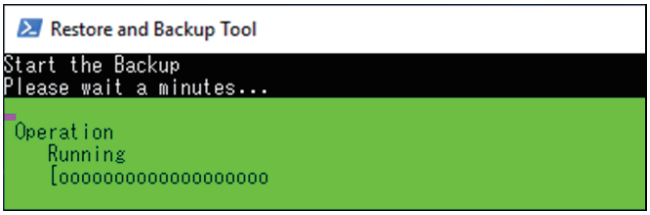

13. After backup is complete, the following screen is displayed. Remove the backup USB from the product, and then select **Restart** or **Shutdown**.

To restore the system, refer to System Recovery, page 147.

Windows 11

After product setup, backing up the system is recommended. Prepare a commercially available USB memory with a size of 32 GB or more, to create a backup USB.

NOTE: Right after the hibernation is performed, system backup or recovery will not run properly. Perform system backup or recovery after shutting down the product.

1. Prepare a commercially available USB memory.
2. Create a recovery USB with the **Recovery USB** in the Launcher. Refer to Recovery USB (Windows 11 Only), page 137.
3. Insert the recovery USB created in step 2 into the product.
4. Turn on the product.
5. While the boot screen is displayed, press the [F7] key.
6. Enter the password (default password: Pw#12345).
7. From the following screen, select the recovery USB.

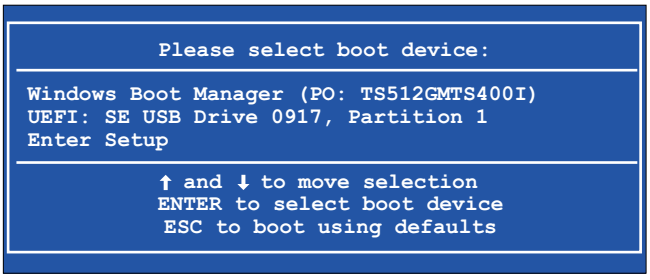

8. Select **Backup** > **OK**.

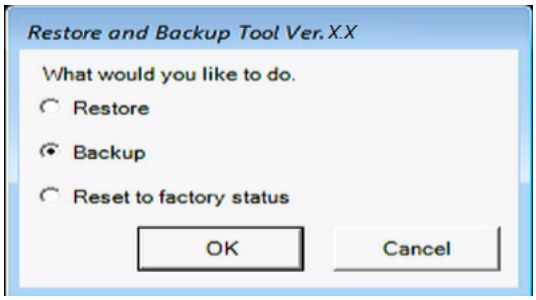

NOTE:

- If the "Factory image" folder where the factory default image is stored remains in the USB under the "Other label" drive, **Reset to factory status** is displayed.
- After restoring your system image in the product, the factory default image will be lost. Even if you perform **Recovery USB** in the Launcher, the factory default image will be no longer created in the USB.

9. Select the disk to backup. Only C drive can be backed up. If several storage devices are shown in the dialog box, select the storage device of C drive. If there is only one storage device, the following screen does not appear and skip to step 10.

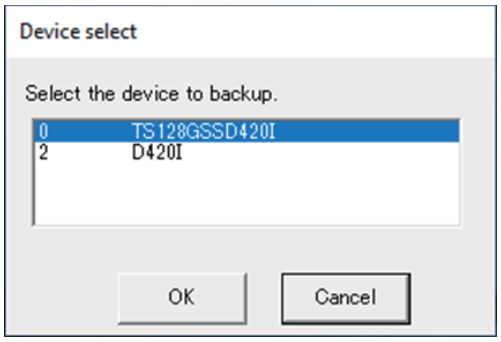

10. Select the drive labeled "Other label", enter a file name, and select either **Save** or **Open**.

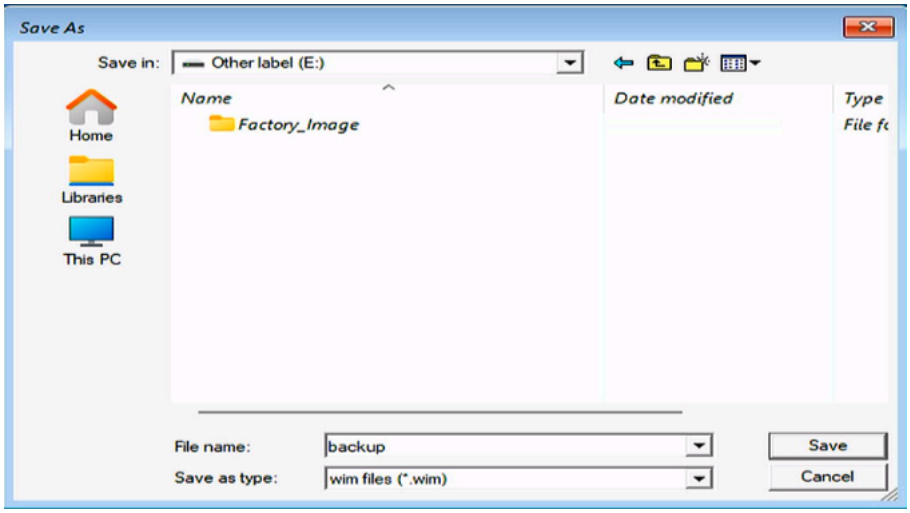

NOTE: Do not create the backup image in the "Factory image" folder.

11. In the confirmation screen, select **OK**.

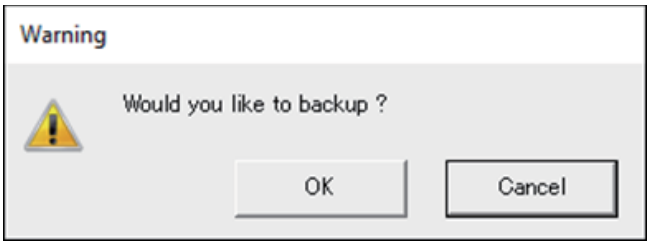

12. Backup begins.

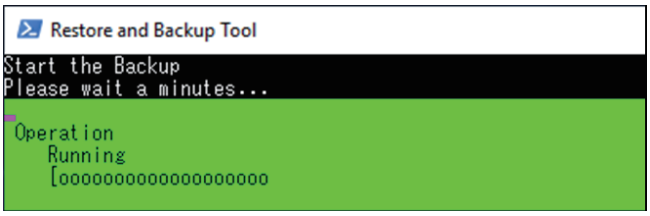

13. After backup is complete, the following screen is displayed. Remove the backup USB from the product, and then select **Restart** or **Shutdown**.

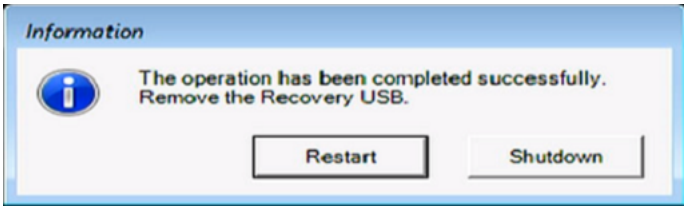

System Recovery

Windows 10

To restore the system, recovery media is required. Prepare the optional recovery USB (HMIYP6RUSW10B) that was purchased, or the recovery USB created with the Recovery USB Creation Tool.

NOTE:

- The optional recovery USB recovers the operating system only. If you require backup in addition to recovery of the operating system, refer to System Backup, page 143.
- When HORM is enabled or immediately after hibernation, system backup or recovery will not run properly. Perform system backup or recovery after first disabling HORM and then shutting down the product.

1. Insert the recovery media to this product.
2. Turn on the product.
3. While the boot screen is displayed, press the [F7] key.
4. Enter the password (default password: Pw#12345).

5. Select the recovery media name.

   NOTE: For the optional recovery USB, the name starts with "UEFI". (The name below is for reference only.)

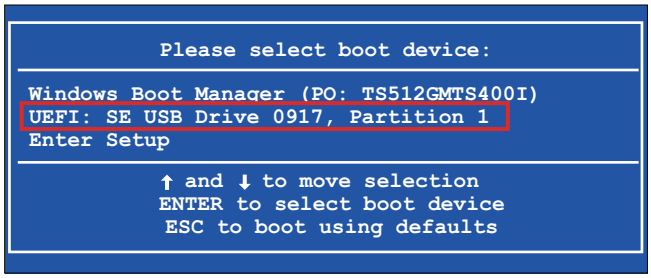

6. If you recover the system with the optional recovery USB, select **OK**. To restore the system with a recovery USB created with the Recovery USB Creation Tool, select **Restore > OK**.

   When using the optional recovery USB

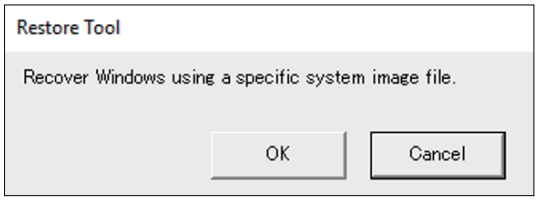

   When using a recovery USB created with the Recovery USB Creation Tool

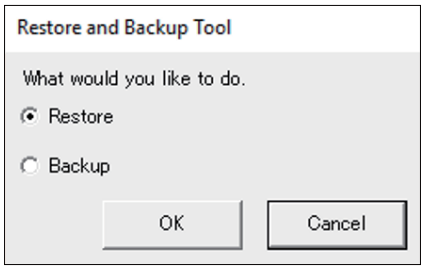

7. Select the disk to recover. If there is only one storage, the following screen does not appear and skip to step 8.

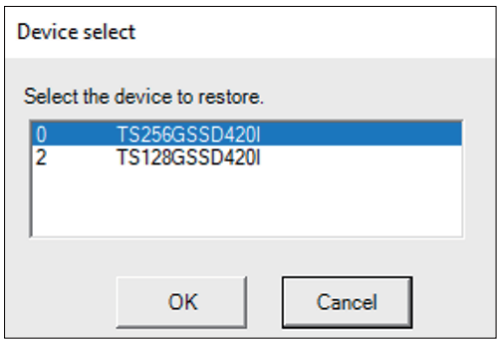

8. If you are using the optional recovery USB, or if there is only one backup file (*.wim file) in the recovery USB created with the Recovery USB Creation Tool, go to step 9.
   When using a recovery USB created with the Recovery USB Creation Tool, select the drive labeled "Other label" > select the wim backup file > select **Open**.

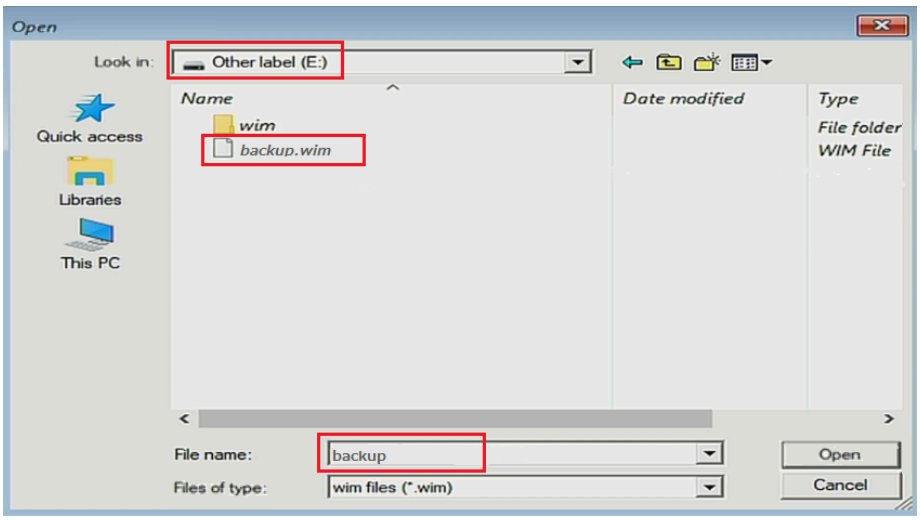

9. In the confirmation screen, select **OK**.

10. Recovery begins.

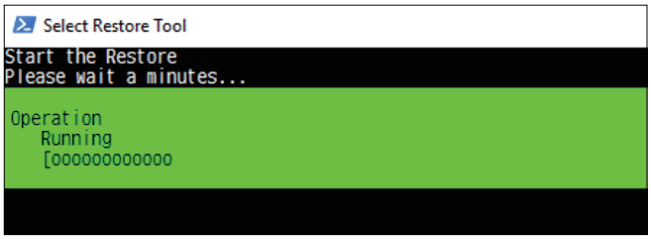

11. After recovery is complete and the following screen is displayed, remove the recovery media from the product and select either **Restart** or **Shutdown**.

Windows 11

To restore the system, a recovery USB is required. Prepare a recovery USB created with **Recovery USB** in the Launcher. Refer to Recovery USB (Windows 11 Only), page 137.

NOTE: Right after the hibernation is performed, system backup or recovery will not run properly. Perform system backup or recovery after shutting down the product.

1. Insert the recovery USB to this product.
2. Turn on the product.
3. While the boot screen is displayed, press the [F7] key.
4. Enter the password (default password: Pw#12345).
5. Select the recovery USB.

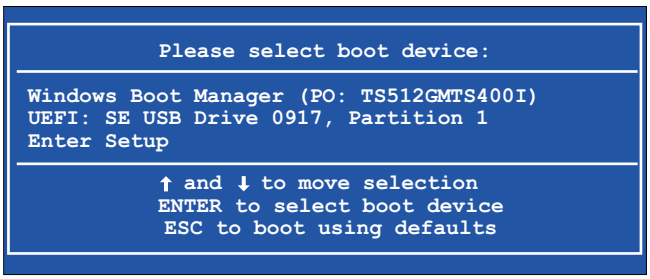

6. To restore the system image backed up with **Recovery USB** in the Launcher, select **Restore** > **OK**.

   NOTE:

   - If the "Factory image" folder where the factory default image is stored remains in the USB under the "Other label" drive, **Reset to factory status** is displayed.
   - **Reset to factory status** resets only the operating system image. It does not reset the UEFI BIOS settings.
   - After restoring your system image in the product, the factory default image will be lost. Even if you perform **Recovery USB** in the Launcher, the factory default image will be no longer created in the USB.

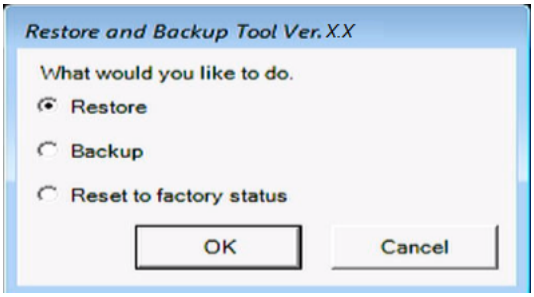

To restore the factory default image, select **Reset to factory status** > **OK**.

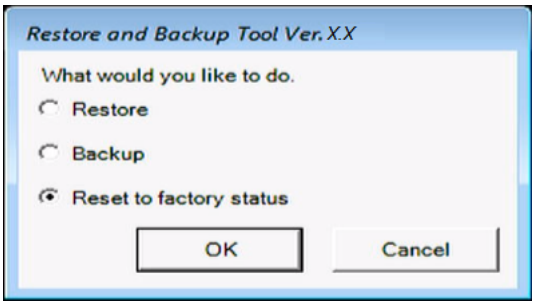

7. Select the disk to recover. If there is only one storage, the following screen does not appear and skip to step 8.

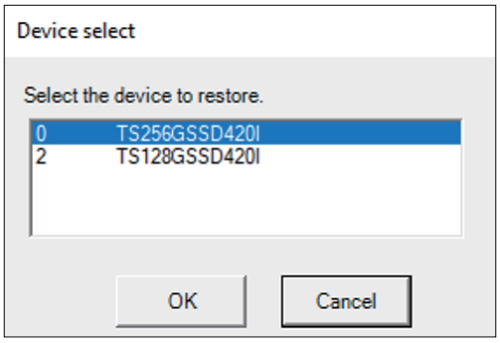

8. If there is one wim file stored directly under "Other label", or restore the factory default, go to step 9. If there are two or more wim files stored directly under "Other label", select the "Other label" > the wim file to restore > select **Open**.

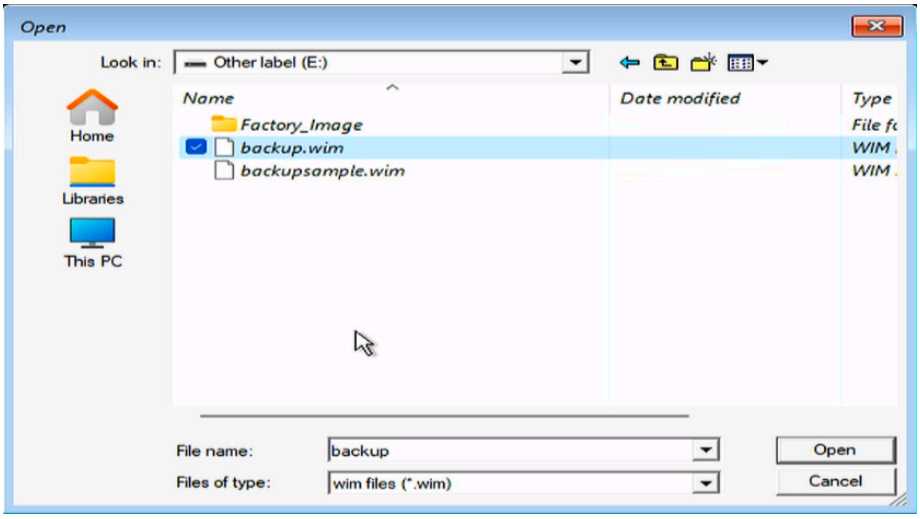

9. In the confirmation screen, select **OK**.

10. Recovery begins.

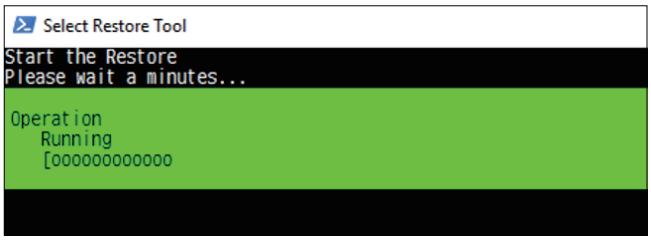

11. After recovery is complete and the following screen is displayed, remove the recovery media from the product and select either **Restart** or **Shutdown**.

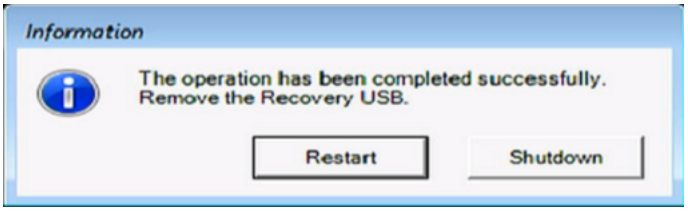

API

The API is published on the following URL.

www.se.com/ww/en/download

API	File
System Monitor API	PFXPHMIP6_SysMonApi_Ver.x.x.zip PFXPHMIP6_RAS_API_WDT_Ver.x.x.zip PFXPHMIP6_ERROR_LED_API_Ver.x.x.zip

NOTE: For the System Monitor API manual, refer to the following.
http://hmi.schneider-electric.com/trans/en/product/1.html

Schneider Electric
1884 Boulevard de la Défense
92000 Nanterre
France

www.se.com

© 2026 Schneider Electric. All rights reserved.

EIO0000005081.03