Modicon M580 Complex Topologies

System Guide

Original instructions

NHA58892.09
07/2026

www.se.com

Legal Information

The information provided in this document contains general descriptions, technical characteristics and/or recommendations related to products/solutions.

This document is not intended as a substitute for a detailed study or operational and site-specific development or schematic plan. It is not to be used for determining suitability or reliability of the products/solutions for specific user applications. It is the duty of any such user to perform or have any professional expert of its choice (integrator, specifier or the like) perform the appropriate and comprehensive risk analysis, evaluation and testing of the products/solutions with respect to the relevant specific application or use thereof.

The Schneider Electric brand and any trademarks of Schneider Electric and its subsidiaries referred to in this document are the property of Schneider Electric or its subsidiaries. All other brands may be trademarks of their respective owner.

This document and its content are protected under applicable copyright laws and provided for informative use only. No part of this document may be reproduced or transmitted in any form or by any means (electronic, mechanical, photocopying, recording, or otherwise), for any purpose, without the prior written permission of Schneider Electric.

Schneider Electric does not grant any right or license for commercial use of the document or its content, except for a non-exclusive and personal license to consult it on an "as is" basis.

Electrical equipment should be installed, operated, serviced, and maintained only by qualified personnel. No responsibility is assumed by Schneider Electric for any consequences arising out of the use of this material.

Schneider Electric reserves the right to make changes or updates with respect to or in the content of this document or the format thereof, at any time without notice.

To the extent permitted by applicable law, no responsibility or liability is assumed by Schneider Electric and its subsidiaries for any errors or omissions in the informational content of this document, as well as any non-intended use or misuse of the content thereof.

Table of Contents

Table of Contents 3
Safety Information 6
Before You Begin 7
Start-up and Test 9
Operation and Adjustments 10
About the Document 11
Modicon M580 System Introduction 19
Hardware in a Complex M580 System 20
Modules and Switches in Complex M580 Systems 21
Overview of Complex Topologies 27
Planning a High-Capacity Daisy Chain Loop 29
Planning and Designing a Typical M580 Network 31
DRS Predefined Configuration Files 32
DRS Predefined Configuration Files 34
C1: Copper RIO Main Ring and RIO Sub-ring with DIO Clouds 44
C2: Copper RIO Main Ring and DIO Sub-ring with DIO Clouds 48
C3: Fiber RIO Main Ring and Copper RIO Sub-ring with DIO Clouds 51
C4: Fiber RIO Main Ring and Copper DIO Sub-ring with DIO Clouds 56
C5: Copper/Fiber Main Ring Connections and RIO Sub-ring with DIO Clouds 61
C6: Copper/Fiber Main Ring Connections and DIO Sub-ring with DIO Clouds 66
C7: Master Copper RIO Main Ring and RIO Sub-ring with DIO Clouds 69
C8: Slave Copper RIO Main Ring and RIO Sub-ring with DIO Clouds 73
C9: Master Copper RIO Main Ring and DIO Sub-ring with DIO Clouds 77
C10: Slave Copper RIO Main Ring and DIO Sub-ring with DIO Clouds 81
C11: Master Copper/Fiber Main Ring Connections and RIO Sub-ring with DIO Clouds 85
C12: Slave Copper/Fiber Main Ring Connections and RIO Sub-ring with DIO Clouds 92
C13: Master Copper/Fiber Main Ring Connections and DIO Sub-ring with DIO Clouds 100

C14: Slave Copper/Fiber Main Ring Connections and DIO Sub-ring with DIO Clouds 105
C15: Copper/Fiber Connection for a Long-haul Hot Standby Link 110
C16: Copper RIO Main Ring and Fiber RIO Sub-ring with DIO Clouds 114
C17: Master Fiber RIO Main Ring and Copper RIO Sub-ring with DIO Clouds 118
C18: Slave Fiber RIO Main Ring and Copper RIO Sub-ring with DIO Clouds 122
C19: Master Copper RIO Main Ring and Copper/Fiber RIO Sub-ring with DIO Clouds 126
C20: Slave Copper RIO Main Ring and Copper/Fiber RIO Sub-ring with DIO Clouds 130
Obtaining and Installing Predefined Configuration Files 134
Performance 138
Performance 139
System Performance 139
Calculating the Minimum MAST Cycle Time 141
System Throughput Considerations 143
Verifying the Network Connection 145
Using the Ethernet Network Manager 145
Application Response Time 149
ART Computation Parameters 149
Application Response Time Example 151
Communication Loss Detection Times 155
Optimizing Application Response Time 156
Diagnosing Complex M580 Sytems 159
System Diagnostics 160
System Diagnostics 161
Main Ring Diagnostics 166
Sub-Ring Diagnostics 167
Appendices 172
Frequently Asked Questions (FAQ) 173
FAQs 173
Complex Network Design Principles 174
RIO with DIO Network Design Principles 174

Defined Architecture: Topologies 175
Defined Architecture: Junctions 178
Glossary 181
Index 184

Safety Information

Important Information

Read these instructions carefully, and look at the equipment to become familiar with the device before trying to install, operate, service, or maintain it. The following special messages may appear throughout this documentation or on the equipment to warn of potential hazards or to call attention to information that clarifies or simplifies a procedure.

The addition of this symbol to a “Danger” or “Warning” safety label indicates that an electrical hazard exists which will result in personal injury if the instructions are not followed.

This is the safety alert symbol. It is used to alert you to potential personal injury hazards. Obey all safety messages that follow this symbol to avoid possible injury or death.

⚠ DANGER

DANGER indicates a hazardous situation which, if not avoided, **will result in** death or serious injury.

⚠ WARNING

WARNING indicates a hazardous situation which, if not avoided, **could result in** death or serious injury.

⚠ CAUTION

CAUTION indicates a hazardous situation which, if not avoided, **could result** in minor or moderate injury.

NOTICE

NOTICE is used to address practices not related to physical injury.

Please Note

Electrical equipment should be installed, operated, serviced, and maintained only by qualified personnel. No responsibility is assumed by Schneider Electric for any consequences arising out of the use of this material.

A qualified person is one who has skills and knowledge related to the construction and operation of electrical equipment and its installation, and has received safety training to recognize and avoid the hazards involved.

Before You Begin

Do not use this product on machinery lacking effective point-of-operation guarding. Lack of effective point-of-operation guarding on a machine can result in serious injury to the operator of that machine.

⚠ WARNING

UNGUARDED EQUIPMENT

- Do not use this software and related automation equipment on equipment which does not have point-of-operation protection.
- Do not reach into machinery during operation.

Failure to follow these instructions can result in death, serious injury, or equipment damage.

This automation equipment and related software is used to control a variety of industrial processes. The type or model of automation equipment suitable for each application will vary depending on factors such as the control function required, degree of protection required, production methods, unusual conditions, government regulations, etc. In some applications, more than one processor may be required, as when backup redundancy is needed.

Only you, the user, machine builder or system integrator can be aware of all the conditions and factors present during setup, operation, and maintenance of the machine and, therefore, can determine the automation equipment and the related safeties and interlocks which can be properly used. When selecting automation and control equipment and related software for a particular application, you should refer to the applicable local and national standards and regulations. The National Safety Council's Accident Prevention Manual (nationally recognized in the United States of America) also provides much useful information.

In some applications, such as packaging machinery, additional operator protection such as point-of-operation guarding must be provided. This is necessary if the operator's hands and

other parts of the body are free to enter the pinch points or other hazardous areas and serious injury can occur. Software products alone cannot protect an operator from injury. For this reason the software cannot be substituted for or take the place of point-of-operation protection.

Ensure that appropriate safeties and mechanical/electrical interlocks related to point-of-operation protection have been installed and are operational before placing the equipment into service. All interlocks and safeties related to point-of-operation protection must be coordinated with the related automation equipment and software programming.

NOTE: Coordination of safeties and mechanical/electrical interlocks for point-of-operation protection is outside the scope of the Function Block Library, System User Guide, or other implementation referenced in this documentation.

Start-up and Test

Before using electrical control and automation equipment for regular operation after installation, the system should be given a start-up test by qualified personnel to verify correct operation of the equipment. It is important that arrangements for such a check are made and that enough time is allowed to perform complete and satisfactory testing.

⚠ WARNING

EQUIPMENT OPERATION HAZARD

- Verify that all installation and set up procedures have been completed.
- Before operational tests are performed, remove all blocks or other temporary holding means used for shipment from all component devices.
- Remove tools, meters, and debris from equipment.

Failure to follow these instructions can result in death, serious injury, or equipment damage.

Follow all start-up tests recommended in the equipment documentation. Store all equipment documentation for future references.

Software testing must be done in both simulated and real environments.

Verify that the completed system is free from all short circuits and temporary grounds that are not installed according to local regulations (according to the National Electrical Code in the U.S.A, for instance). If high-potential voltage testing is necessary, follow recommendations in equipment documentation to prevent accidental equipment damage.

Before energizing equipment:

- Remove tools, meters, and debris from equipment.
- Close the equipment enclosure door.
- Remove all temporary grounds from incoming power lines.
- Perform all start-up tests recommended by the manufacturer.

Operation and Adjustments

The following precautions are from the NEMA Standards Publication ICS 7.1-1995:

(In case of divergence or contradiction between any translation and the English original, the original text in the English language will prevail.)

- Regardless of the care exercised in the design and manufacture of equipment or in the selection and ratings of components, there are hazards that can be encountered if such equipment is improperly operated.
- It is sometimes possible to misadjust the equipment and thus produce unsatisfactory or unsafe operation. Always use the manufacturer's instructions as a guide for functional adjustments. Personnel who have access to these adjustments should be familiar with the equipment manufacturer's instructions and the machinery used with the electrical equipment.
- Only those operational adjustments required by the operator should be accessible to the operator. Access to other controls should be restricted to prevent unauthorized changes in operating characteristics.

About the Document

Document Scope

EcoStruxure™ is a Schneider Electric collaborative and integrated automation architecture for industrial and infrastructure applications. From initial design to modernization, it transparently connects control, operation, and enterprise levels of business.

This document presents one of the features, using Ethernet as the backbone around the Modicon M580 offer to facilitate communications between an M580 local backplane and remote sub-rings through dual-ring switches (DRSs).

This guide provides detailed information about planning complex M580 architectures, including these:

- implementation of dual-ring switches (DRSs) to support sub-rings
- topology rules for choosing a complex network configuration
- system performance and limitations
- system diagnostics

NOTE: The specific configuration settings contained in this guide are intended to be used for instructional purposes only. The settings required for your specific configuration may differ from the examples presented in this guide.

Validity Note

This document has been updated for the release of EcoStruxure™ Control Expert 16.4.

The characteristics of the products described in this document are intended to match the characteristics that are available on www.se.com. As part of our corporate strategy for constant improvement, we may revise the content over time to enhance clarity and accuracy. If you see a difference between the characteristics in this document and the characteristics on www.se.com, consider www.se.com to contain the latest information.

Product Related Information

⚠⚠DANGER

HAZARD OF ELECTRIC SHOCK, EXPLOSION OR ARC FLASH

- Disconnect all power from all equipment including connected devices prior to removing any covers or doors, or installing or removing any accessories, hardware, cables, or wires except under the specific conditions specified in the appropriate hardware guide for this equipment.
- Always use a properly rated voltage sensing device to confirm the power is off where and when indicated.
- Replace and secure all covers, accessories, hardware, cables, and wires and confirm that a proper ground connection exists before applying power to the unit.
- Use only the specified voltage when operating this equipment and any associated products.

Failure to follow these instructions will result in death or serious injury.

⚠WARNING

LOSS OF CONTROL

- Perform a Failure Mode and Effects Analysis (FMEA), or equivalent risk analysis, of your application, and apply preventive and detective controls before implementation.
- Provide a fallback state for undesired control events or sequences.
- Provide separate or redundant control paths wherever required.
- Supply appropriate parameters, particularly for limits.
- Review the implications of transmission delays and take actions to mitigate them.
- Review the implications of communication link interruptions and take actions to mitigate them.
- Provide independent paths for control functions (for example, emergency stop, over-limit conditions, and error conditions) according to your risk assessment, and applicable codes and regulations.
- Apply local accident prevention and safety regulations and guidelines.[1]
- Test each implementation of a system for proper operation before placing it into service.

Failure to follow these instructions can result in death, serious injury, or equipment damage.

[1] For additional information, refer to NEMA ICS 1.1 (latest edition), *Safety Guidelines for the Application, Installation, and Maintenance of Solid State Control* and to NEMA ICS 7.1

(latest edition), *Safety Standards for Construction and Guide for Selection, Installation and Operation of Adjustable-Speed Drive Systems* or their equivalent governing your particular location.

⚠ WARNING

UNINTENDED EQUIPMENT OPERATION

- Only use software approved by Schneider Electric for use with this equipment.
- Update your application program every time you change the physical hardware configuration.

Failure to follow these instructions can result in death, serious injury, or equipment damage.

The examples in this manual are given for information only.

⚠ WARNING

UNINTENDED EQUIPMENT OPERATION

Adapt examples that are given in this manual to the specific functions and requirements of your industrial application before you implement them.

Failure to follow these instructions can result in death, serious injury, or equipment damage.

General Cybersecurity Information

In recent years, the growing number of networked machines and production plants has seen a corresponding increase in the potential for cyber threats, such as unauthorized access, data breaches, and operational disruptions. You must, therefore, consider all possible cybersecurity measures to help protect assets and systems against such threats.

To help keep your Schneider Electric products secure and protected, it is in your best interest to implement the cybersecurity best practices as described in the Cybersecurity Best Practices document.

Schneider Electric provides additional information and assistance:

- Subscribe to the Schneider Electric security newsletter.
- Visit the Cybersecurity Support Portal web page to:
  - Find Security Notifications.
  - Report vulnerabilities and incidents.
- Visit the Schneider Electric Cybersecurity and Data Protection Posture web page to:
  - Access the cybersecurity posture.
  - Learn more about cybersecurity in the cybersecurity academy.
  - Explore the cybersecurity services from Schneider Electric.

Related Documents

Title of Documentation	Reference Number
Modicon M580 Frequently Used Architectures, System Guide	HRB62666 (English), HRB65318 (French), HRB65319 (German), HRB65320 (Italian), HRB65321 (Spanish), HRB65322 (Chinese)
Modicon M580 Hot Standby, Frequently Used Architectures, System Guide	NHA58880 (English), NHA58881 (French), NHA58882 (German), NHA58883 (Italian), NHA58884 (Spanish), NHA58885 (Chinese)
Modicon M580, Hardware, Reference Manual	EIO0000001578 (English), EIO0000001579 (French), EIO0000001580 (German), EIO0000001582 (Italian), EIO0000001581 (Spanish), EIO0000001583 (Chinese)
Modicon M580, RIO Modules, Installation and Configuration Guide	EIO0000001584 (English), EIO0000001585 (French), EIO0000001586 (German), EIO0000001587 (Italian), EIO0000001588 (Spanish), EIO0000001589 (Chinese),

Title of Documentation	Reference Number
Modicon M580, Change Configuration on the Fly, User Guide	EIO0000001590 (English), EIO0000001591 (French), EIO0000001592 (German), EIO0000001594 (Italian), EIO0000001593 (Spanish), EIO0000001595 (Chinese)
Modicon M580 BMENOS0300 Network Option Switch Module, Installation and Configuration Guide	NHA89117 (English) NHA89119 (French) NHA89120 (German) NHA89121 (Italian) NHA89122 (Spanish) NHA89123 (Chinese)
Modicon X80, BMXNRP0200/0201 Fiber Converter Modules, User Guide	EIO0000001108 (English), EIO0000001109 (French), EIO0000001110 (German), EIO0000001111 (Spanish), EIO0000001112 (Italian), EIO0000001113 (Chinese)
Modicon eX80, BMEAHI0812 HART Analog Input Module & BMEAHO0412 HART Analog Output Module, User Guide	EAV16400 (English), EAV28404 (French), EAV28384 (German), EAV28413 (Italian), EAV28360 (Spanish), EAV28417 (Chinese)
Modicon X80, Analog Input/Output Modules, User Manual	35011978 (English), 35011979 (German), 35011980 (French), 35011981 (Spanish), 35011982 (Italian), 35011983 (Chinese)
Modicon X80, Discrete Input/Output Modules, User Manual	35012474 (English), 35012475 (German), 35012476 (French), 35012477 (Spanish), 35012478 (Italian), 35012479 (Chinese)
Modicon X80, BMXEHC0200 Counting Module, User Manual	35013355 (English), 35013356 (German), 35013357 (French), 35013358 (Spanish), 35013359 (Italian), 35013360 (Chinese)
Electrical installation guide	EIGED306001EN (English)
EcoStruxure™ Control Expert, Program Languages and Structure, Reference Manual	35006144 (English), 35006145 (French), 35006146 (German), 35013361 (Italian), 35006147 (Spanish), 35013362 (Chinese)
EcoStruxure™ Control Expert, System Bits and Words, Reference Manual	EIO0000002135 (English), EIO0000002136 (French), EIO0000002137 (German), EIO0000002138 (Italian), EIO0000002139 (Spanish), EIO0000002140 (Chinese)
EcoStruxure™ Control Expert, Operating Modes	33003101 (English), 33003102 (French), 33003103 (German), 33003104 (Spanish), 33003696 (Italian), 33003697 (Chinese)
EcoStruxure™ Control Expert, Installation Manual	35014792 (English), 35014793 (French), 35014794 (German), 35014795 (Spanish), 35014796 (Italian), 35012191 (Chinese)
Modicon Controllers Platform Cyber Security, Reference Manual	EIO0000001999 (English), EIO0000002001 (French), EIO0000002000 (German), EIO0000002002 (Italian), EIO0000002003 (Spanish), EIO0000002004 (Chinese)

Title of Documentation	Reference Number
Modicon M580 Redundant Communication Adapter Module (PRP) for X80 RIO Drops Installation and Configuration Guide	EIO0000004532 (English), EIO0000004533 (French), EIO0000004534 (German), EIO0000004535 (Italian), EIO0000004536 (Spanish), EIO0000004537 (Chinese)
Modicon M580 BMENOC0301/11, Ethernet Communication Module, Installation and Configuration Guide	HRB62665 (ENG) HRB65311 (FRE) HRB65313 (GER) HRB65314 (ITA) HRB65315 (SPA) HRB65316 (CHS)
Modicon M580 BMENOC0302 High Performance Ethernet Communication Module, Installation and Configuration Guide	NNZ44174 (ENG)
Modicon Edge I/O NTS Analog Modules, User Guide	EIO0000005246 (ENG)
Modicon Edge I/O NTS Discrete Modules, User Guide	EIO0000005238 (ENG)
Modicon Edge I/O NTS Network Interface Modules, User Guide	EIO0000004794 (ENG)
Modicon Edge I/O NTS Counting Modules, User Guide	EIO0000005262 (ENG)
Modicon Edge I/O NTS, System Planning and Installation Guide	EIO0000004786 (ENG)
Modicon Edge I/O, Deployment Guide For EcoStruxure Control Expert Classic	EIO0000004841 (ENG)

Terminology Derived from Standards

The technical terms, terminology, symbols and the corresponding descriptions in the information contained herein, or that appear in or on the products themselves, are generally derived from the terms or definitions of international standards.

In the area of functional safety systems, drives and general automation, this may include, but is not limited to, terms such as *safety*, *safety function*, *safe state*, *fault*, *fault reset*, *malfunction*, *failure*, *error*, *error message*, *dangerous*, etc.

Among others, these standards include:

Standard	Description
IEC 61131-2:2007	Programmable controllers, part 2: Equipment requirements and tests.
ISO 13849-1:2023	Safety of machinery: Safety related parts of control systems. General principles for design.
EN 61496-1:2013	Safety of machinery: Electro-sensitive protective equipment. Part 1: General requirements and tests.
ISO 12100:2010	Safety of machinery - General principles for design - Risk assessment and risk reduction
EN 60204-1:2006	Safety of machinery - Electrical equipment of machines - Part 1: General requirements
ISO 14119:2013	Safety of machinery - Interlocking devices associated with guards - Principles for design and selection
ISO 13850:2015	Safety of machinery - Emergency stop - Principles for design
IEC 62061:2021	Safety of machinery - Functional safety of safety-related electrical, electronic, and electronic programmable control systems
IEC 61508-1:2010	Functional safety of electrical/electronic/programmable electronic safety-related systems: General requirements.
IEC 61508-2:2010	Functional safety of electrical/electronic/programmable electronic safety-related systems: Requirements for electrical/electronic/programmable electronic safety-related systems.
IEC 61508-3:2010	Functional safety of electrical/electronic/programmable electronic safety-related systems: Software requirements.
IEC 61784-3:2021	Industrial communication networks - Profiles - Part 3: Functional safety fieldbuses - General rules and profile definitions.
2006/42/EC	Machinery Directive
2014/30/EU	Electromagnetic Compatibility Directive
2014/35/EU	Low Voltage Directive

In addition, terms used in the present document may tangentially be used as they are derived from other standards such as:

Standard	Description
IEC 60034 series	Rotating electrical machines
IEC 61800 series	Adjustable speed electrical power drive systems
IEC 61158 series	Digital data communications for measurement and control – Fieldbus for use in industrial control systems

Finally, the term zone of operation may be used in conjunction with the description of specific hazards, and is defined as it is for a hazard zone or danger zone in the Machinery Directive (2006/42/EC) and ISO 12100:2010.

NOTE: The aforementioned standards may or may not apply to the specific products cited in the present documentation. For more information concerning the individual standards applicable to the products described herein, see the characteristics tables for those product references.

Information on Non-Inclusive or Insensitive Terminology

As a responsible, inclusive company, Schneider Electric is constantly updating its communications and products that contain non-inclusive or insensitive terminology. However, despite these efforts, our content may still contain terms that are deemed inappropriate by some customers.

Modicon M580 System Introduction

What's in This Part

Hardware in a Complex M580 System.....20

Introduction

This part introduces the Modicon M580 system, the specific modules required, and the available features.

Hardware in a Complex M580 System

What's in This Chapter

Modules and Switches in Complex M580 Systems.....21
Overview of Complex Topologies 27
Planning a High-Capacity Daisy Chain Loop 29

Introduction

This chapter describes modules and switches that are compatible with complex M580 systems.

Modules and Switches in Complex M580 Systems

Dual-Ring Switches (DRSs)

In complex M580 architectures, you can use a DRS to perform these functions:

- integrate fiber cable on the main ring for distances greater than 100 m between two contiguous remote drops. (You may also use BMXNRP020• (see *Modicon M580 Frequently Used Architectures, System Guide*) fiber converter modules for this purpose.)
- enable distributed equipment to participate on the RIO network
- enable RSTP recovery support for devices on the sub-rings
- isolate the sub-rings from one another and from the main ring to improve system robustness
- provide redundancy between the main ring and a sub-ring when two DRSs are installed next to each other with specific predefined configuration files, page 32
- separate master and standby controllers in a long-haul Hot Standby system (see Modicon M580 Hot Standby, Frequently Used Architectures, System Guide)

NOTE: You can also use a BMENOS0300 module on the local rack or a remote drop to manage distributed equipment in a non-redundant manner.

The following graphics are example of DRSs with copper ports and copper/fiber ports. The numbers in the graphics refer to the ports on the DRSs, which correspond to elements of predefined configurations you will download to the switch. Refer to the *Predefined Configuration Files chapter*, page 32 for details.

NOTE: Use the predefined DRS configurations. Since they are optimized to support 50 ms maximum recovery time, the system can recover within 50 ms from a communication disruption on the main ring or on a sub-ring. If you need to customize a configuration, contact your local Schneider Electric service representative before adapting a switch configuration for your system.

When you download this DRS predefined configuration file to a switch, the file provides a set of operating parameters that enable the switch to operate with high efficiency in the specified architecture. Except when enabling or disabling ports that are not connected to either a main ring or a sub-ring, do not adjust the configuration parameters or alter the port usage in the predefined configuration file. Changing the configuration parameters or the port assignments can compromise the effectiveness and accuracy of the switch, as well as the performance of the RIO network.

For troubleshooting, you can enable/disable port mirroring and change the selection of the source ports that you want mirrored. Port mirroring is disabled by default. If you enable port mirroring, port 8 is the destination port, and ports 1, 2, 3, 5, and 6 are selected as source ports with TX/RX. For the Modicon switches (not the ConneXium switches), select **Allow Management** for the destination port in order to log in and manage the switch using this port.

⚠ WARNING

UNINTENDED EQUIPMENT OPERATION

- Do not modify any parameter in the DRS predefined configuration file you download to the switch, except enabling or disabling port mirroring on Ethernet ports
- Enable at least one port (preferably port 8) for switch management.

Failure to follow these instructions can result in death, serious injury, or equipment damage.

NOTE: Disable unused ports to help avoid unauthorized connection of devices or cabling errors which can lead to significant errors in communication.

Modicon switch with eight copper ports:

Modicon switch with eight copper ports and two fiber ports:

Part	Modicon Switch	Ports
MCSESM083F23F1 or MCSESM083F23F1H	8TX	• copper (8)
MCSESM103F2CU1 or MCSESM103F2CU1H	8TX/2FX-MM	• multi-mode fiber (2) • copper (8)
MCSESM103F2CS1 or MCSESM103F2CS1H	8TX/2FX-SM	• single-mode fiber (2) • copper (8)

NOTE: These three switches use firmware version 8.75 or later.

NOTE: You can achieve up to 2 km with multi-mode fiber cables and up to 15 km with single-mode fiber cables in an M580 system.

You can download these predefined DRS configurations to the switches. These configurations are discussed in the Predefined Configuration Files chapter, page 32.

Switch	DRS Preconfiguration
MCSESM083F23F1	C1: RIOMainRing_RIOSubRing_DIOCloudsVx.xx.cli
	C2: RIOMainRing_DIOSubRing_DIOCloudsVx.xx.cli
	C7: Master_RIOMainRing_RIOSubRing_DIOCloudsVx.xx.cli
	C8: Slave_RIOMainRing_RIOSubRinig_DIOCloudsVx.xx.cli
	C9: Master_RIOMainRing_DIOSubRing_DIOCloudsVx.xx.cli
	C10: Slave_RIOMainRing_DIOSubRing_DIOCloudsVx.xx.cli
MCSESM103F2CU1 or MSCESM103F2CS1	C3: RIOMainRingFx_RIOSubRingTx_DIOCloudsVx.xx.cli
	C4: RIOMainRingFx_DIOSubRingTx_DIOCloudsVx.xx.cli
	C5: RIOMainRingFxTx_RIOSubRingTx_DIOCloudsVx.xx.cli
	C6: RIOMainRingFxTx_DIOSubRingTx_DIOCloudsVx.xx.cli
	C11: Master_RIOMainFxTx_RIOSubRingTx_DIOCloudsVx.xx.cli
	C12: Slave_RIOMainFxTx_RIOSubRingTx_DIOCloudsVx.xx.cli
	C13: Master_RIOMainFxTx_DIOSubRingTx_DIOCloudsVx.xx.cli
	C14: Slave_RIOMainFxTx_DIOSubRingTx_DIOCloudsVx.xx.cli
	C15: CRPLinkHotStandbyLDVx.xx.cli
	C16: RIOMainRingTx_RIOSubRingFx_DIOCloudsTxVx.x.cli
	C17: Master_RIOMainRingFx_RIOSubRingTx_DIOCloudsVx.x.cli
	C18: Slave_RIOMainRingFx_RIOSubRingTx_DIOCloudsVx.x.cli
	C19: Master_RIOMainRingTx_RIOSubRingFxTx_DIOCloudsVx.x.cli
	C20: Slave_RIOMainRingTx_RIOSubRingFxTx_DIOCloudsVx.x.cli

NOTE: Download an appropriate predefined DRS configuration to each switch. Do not try to configure the switches yourself. The predefined configurations, page 32 have been tested so that they meet the determinism and cable redundancy standards of the M580 system.

Upgrading the firmware for a Modicon extended managed switch removes the predefined configuration file settings. When you download a predefined configuration file to a switch, the file provides a set of operating parameters that enable the switch to operate with high efficiency in the specified architecture.

⚠ WARNING

UNINTENDED EQUIPMENT OPERATION

Re-download the predefined configuration file to the switch before placing the switch back in operation.

Failure to follow these instructions can result in death, serious injury, or equipment damage.

To determine which predefined configuration you need to download to each DRS in your network, refer to the *DRS Predefined Configuration Files* chapter, page 32.

Other System Components

For information on these system components, refer to the:

- *Modicon M580 Frequently Used Architectures, System Guide*:
  - BMENOC0301 Ethernet communication module
  - BMENOC0311 Ethernet communication module with FactoryCast capabilities
  - BMENOC0302(H) High Performance Ethernet communication module
  - BMENOC0321 Ethernet communication module for control network connection
  - BMENOS0300 network option switch communications module
  - BMECRA31210 eX80 performance EIO adapter module
  - BMXCRA31200 X80 standard EIO adapter module
  - BMXCRA31210 X80 performance EIO adapter module
  - 140CRA31200 drop adapter module
- Modicon M580 Redundant Communication Adapter Module (PRP) for X80 RIO Drops Installation and Configuration Guide:
  - BMECRA31310 eX80 redundant EIO adapter module
- Modicon Edge I/O NTS, System Planning and Installation Guide:
  - Modicon Edge I/O NTS Modules

Commissioning

Commission your M580 system:

Step	Description
1	Set the location of the Ethernet RIO drop.
2	Power up modules without a downloaded application.
3	Download the controller application(s).
4	Establish transparency between a USB and a device network (see *Modicon M580 Frequently Used Architectures, System Guide*).
5	Perform an initial start after an application download.
6	Start and stop an application.

For more information, refer to the commissioning chapter in the *Modicon M580 Frequently Used Architectures, System Guide* and the *Modicon M580 Hot Standby, Frequently Used Architectures, System Guide*.

Overview of Complex Topologies

Distributed Equipment

The number and location of distributed equipment in the network impact the module choice.

If Distributed Equipment Is ...	Then ...
in an **isolated DIO network or cloud** (see *Modicon M580 Frequently Used Architectures, System Guide*): distributed equipment that **is not** a physical part of the deterministic RIO network	Each BMENOC0301/BMENOC0311 /BMENOC0302(H) Ethernet communication module can manage up to 128 isolated distributed devices. The number of BMENOC0301/BMENOC0311/BMENOC0302(H) modules supported in a local rack is based on the controller reference that you are using. Refer to *Selecting a Controller for your M580 System* (see *Modicon M580 Frequently Used Architectures, System Guide*) for details regarding the number of DIO devices a controller can manage.
in a **DIO cloud** (see *Modicon M580 Frequently Used Architectures, System Guide*): distributed equipment that **is** a physical part of the deterministic RIO network	In addition to a controller with Ethernet I/O scanner service and BMENOC0301/BMENOC0311/BMENOC0302(H) modules on the local rack, you can install one or more BMENOS0300 modules to attach DIO clouds. The distributed equipment cannot be connected directly to the main ring. A controller with Ethernet I/O scanner service can manage up to 64 or 128 distributed devices, depending on the controller you are using Refer to *Selecting a Controller for your M580 System* (see *Modicon M580 Frequently Used Architectures, System Guide*) for details regarding the number of DIO devices a controller can manage.
in an existing (*extended*) network (see *Modicon M580 Frequently Used Architectures, System Guide*) that you want to use to communicate with the M580 device network	Confirm that the Ethernet backplane ports of the BMENOC0301/BMENOC0311/BMENOC0321 and BMENOC0302(H) modules are enabled. Connect one of the Ethernet ports on the front of one of the BMENOC0301/11/BMENOC0302(H) modules to the *Service/Extend* port of the BMENOC0321 module with an interlink cable. Connect the other Ethernet port on the front of the BMENOC0301/BMENOC0311/BMENOC0302(H) module to the existing network.
in an existing (*independent*) network (see *Modicon M580 Frequently Used Architectures, System Guide*) that you want to use to communicate with the M580 control network only	Confirm that the Ethernet backplane port of the BMENOC0321 module is enabled. Connect one of the Ethernet ports on the front of one of the BMENOC0301/BMENOC0311/BMENOC0302(H) modules to the existing network. Confirm that the Ethernet backplane port of the BMENOC0301/BMENOC0311/BMENOC0302(H) module is disabled. Connect the other Ethernet port on the front of the BMENOC0301/BMENOC0311/BMENOC0302(H) module to an Ethernet port on the front of the BMENOC0321 module with an interlink cable. **NOTE:** An independent network is essentially an isolated network, but it communicates with an M580 control network. It does not communicate with the M580 device network. You can manage only one independent network in an M580 system.

NOTE: A local rack can have a maximum of four Ethernet communication modules, depending upon which controller you choose. A maximum of two can be BMENOC0321 modules.

RIO Main Ring and Sub-Ring Design Examples

Given the considerations set forth above, with respect to RIO main and sub-rings, you could construct an M580 network in the following designs, to deploy the maximum number of RIO modules.

Design 1:

- a *main ring* with:
  - 1: controller with Ethernet I/O communication server service
  - 31: BMECRA312•0 EIO adapter modules in RIO drops

    NOTE: You can install a total of 31 remote I/O drops, which can be either X80 BMECRA312•0 or Quantum 140CRA31200 adapter modules or a combination of both, as long as the total amount of drops is less than or equal to 31.
- no RIO sub-rings

Design 2:

- a *main ring* with:
  - 1: controller with Ethernet I/O communication server service
  - 11: BMECRA312•0 EIO adapter modules in RIO drops
  - 10: DRSs, each supporting an RIO sub-ring (each sub-ring supporting two BMECRA312•0 EIO adapter modules in RIO drops

For more information on the Modicon Edge I/O NTS in the RIO main ring and sub-ring, refer to the *Modicon M580 Hot Standby, Frequently Used Architectures, System Guide*.

Typical Device Network

A *device network* is an Ethernet RIO network where distributed equipment can be installed on the same network as RIO modules. In this type of network, RIO traffic has higher priority on the network, so it is delivered ahead of DIO traffic, providing deterministic RIO exchanges.

The device network contains a local rack, RIO drops, distributed equipment, BMENOS0300 network option switch modules, dual-ring switches, adapter class devices, and so on. Devices that are connected to this network follow rules that provide RIO determinism.

Planning a High-Capacity Daisy Chain Loop

Introduction

A high-capacity daisy chain loop incorporates DRSs in the RIO network. The following are possible:

- RIO sub-rings
- DIO sub-rings
- DIO clouds
- fiber cable implementations that use BMXNRP020• fiber converter modules (see *Modicon M580 Frequently Used Architectures, System Guide*)

Planning a High-Capacity Daisy Chain Loop

An M580 local rack contains a controller and supports a maximum of four Ethernet communication modules, including BMENOC0301, BMENOC0311, BMENOC0302(H) or BMENOC0321 modules and BMENOS0300 network option switch modules. A maximum of two modules can be a BMENOC0321 network option switch module. The number of communication modules with DIO scanning service depends on your controller selection (see *Modicon M580 Frequently Used Architectures, System Guide*).

If you use both RIO and distributed equipment in the main ring, use a controller that supports both RIO and DIO scanning (see *Modicon M580 Frequently Used Architectures, System Guide*), referred to in this guide as a controller with Ethernet I/O communication service. These are the controllers with commercial references that end in *40*.

NOTE:

- RIO drops maintain their determinism and cable redundancy in a high-capacity daisy chain loop network. If a communication disruption (for example, a broken wire) occurs on the main ring or any of the RIO sub-rings, the network will recover within 50 ms.
- To keep the network recovery time within the 50 ms limit, a maximum of 32 devices (including a controller with Ethernet I/O communication server service in the local rack) are allowed on the main ring.
- A maximum of 31 RIO drops (each drop containing a BMECRA312•0 X80 EIO adapter module) are allowed on the RIO network.
- To diagnose a break in a daisy chain loop, refer to the diagnostics chapter in the BMENOS0300 guide (see *Modicon M580 BMENOS0300 Network Option Switch Module, Installation and Configuration Guide*).

Connecting Distributed Equipment to the RIO Network

This BMEP58••40 controller (with Ethernet I/O scanning service) on a local rack supports an RIO main ring with distributed equipment connected to the RIO network:

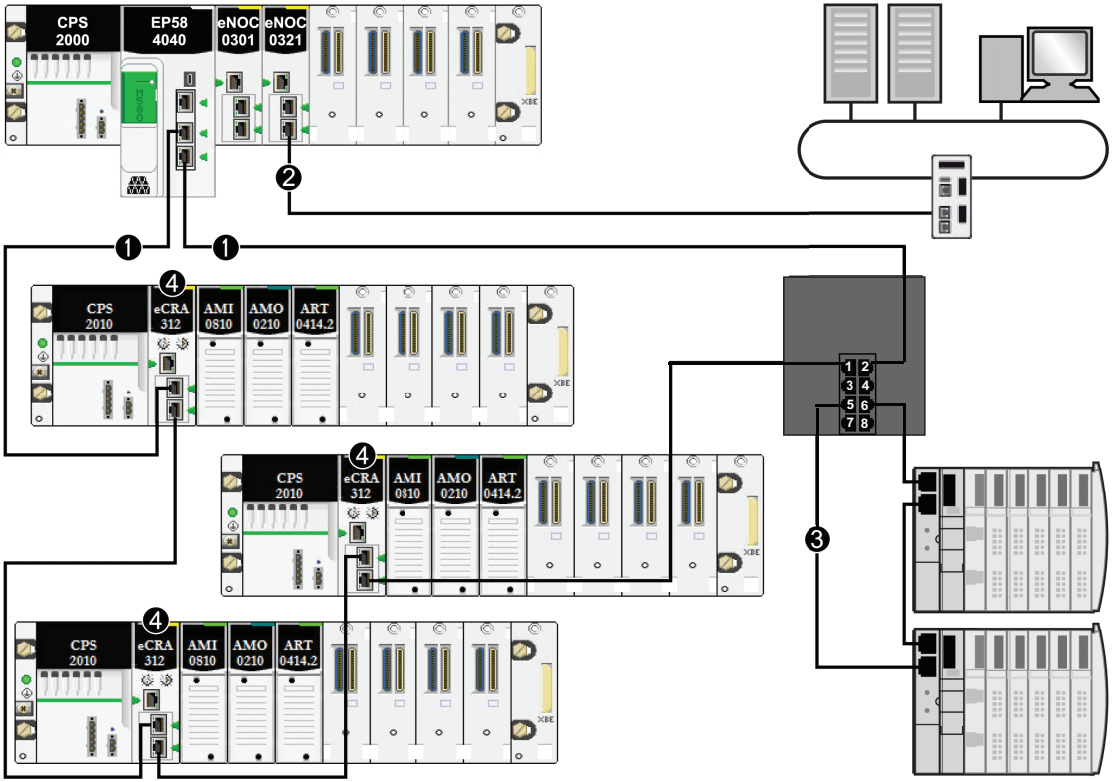

1 The M580 controller is connected to the main ring.

2 The BMENOC0321 control network module is connected to the control network, creating transparency between the device network and the control network.

3 The DIO sub-ring is connected to the main ring through a dual-ring switch (DRS).

4 RIO drops are connected to the main ring through BMECRA312•0 X80 EIO adapter modules.

Planning and Designing a Typical M580 Network

What's in This Part

DRS Predefined Configuration Files.....32

Introduction

This part describes the process of selecting the proper topology for your system, as well as the limitations involved in constructing your network and the role of determinism in a typical RIO network.

DRS Predefined Configuration Files

What's in This Chapter

DRS Predefined Configuration Files 34
C1: Copper RIO Main Ring and RIO Sub-ring with DIO Clouds 44
C2: Copper RIO Main Ring and DIO Sub-ring with DIO Clouds 48
C3: Fiber RIO Main Ring and Copper RIO Sub-ring with DIO Clouds 51
C4: Fiber RIO Main Ring and Copper DIO Sub-ring with DIO Clouds 56
C5: Copper/Fiber Main Ring Connections and RIO Sub-ring with DIO Clouds 61
C6: Copper/Fiber Main Ring Connections and DIO Sub-ring with DIO Clouds 66
C7: Master Copper RIO Main Ring and RIO Sub-ring with DIO Clouds 69
C8: Slave Copper RIO Main Ring and RIO Sub-ring with DIO Clouds 73
C9: Master Copper RIO Main Ring and DIO Sub-ring with DIO Clouds 77
C10: Slave Copper RIO Main Ring and DIO Sub-ring with DIO Clouds 81
C11: Master Copper/Fiber Main Ring Connections and RIO Sub-ring with DIO Clouds 85
C12: Slave Copper/Fiber Main Ring Connections and RIO Sub-ring with DIO Clouds 92
C13: Master Copper/Fiber Main Ring Connections and DIO Sub-ring with DIO Clouds 100
C14: Slave Copper/Fiber Main Ring Connections and DIO Sub-ring with DIO Clouds 105
C15: Copper/Fiber Connection for a Long-haul Hot Standby Link 110
C16: Copper RIO Main Ring and Fiber RIO Sub-ring with DIO Clouds 114
C17: Master Fiber RIO Main Ring and Copper RIO Sub-ring with DIO Clouds 118
C18: Slave Fiber RIO Main Ring and Copper RIO Sub-ring with DIO Clouds 122
C19: Master Copper RIO Main Ring and Copper/Fiber RIO Sub-ring with DIO Clouds 126
C20: Slave Copper RIO Main Ring and Copper/Fiber RIO Sub-ring with DIO Clouds 130
Obtaining and Installing Predefined Configuration Files 134

Overview

This chapter describes how to obtain and apply predefined configuration files provided by Schneider Electric. Use the files to configure Modicon MCSESM extended managed switches to perform as dual-ring switches (DRSs) on M580 main rings and sub-rings.

DRS Predefined Configuration Files

Introduction

Schneider Electric provides several predefined configuration files for its 8-port and 10-port MCSESM dual-ring switches (DRSs). You can use these predefined configuration files to apply DRS configuration settings, instead of manually configuring switch properties.

For more information on obtaining and installing predefined configuration files, refer to the topic Obtaining and Installing Predefined Configuration Files, page 134.

Each configuration is specifically designed for an MCSESM DRS with one of these port configurations:

- 8 copper ports (no fiber ports)
- 2 fiber ports, 8 copper ports

Apply a predefined configuration file only to an MCSESM DRS that is appropriate for that specific switch.

List of Switches

You can use these Modicon extended managed switches in an M580 system.

Part	Modicon Switch	Ports
MCSESM083F23F1 or MCSESM083F23F1H	8TX	• copper (8)
MCSESM103F2CU1 or MCSESM103F2CU1H	8TX/2FX-MM	• multi-mode fiber (2) • copper (8)
MCSESM103F2CS1 or MCSESM103F2CS1H	8TX/2FX-SM	• single-mode fiber (2) • copper (8)
NOTE: These three switches use firmware version 8.75 or later. **NOTE:** You can achieve up to 2 km with multi-mode fiber cables and up to 15 km with single-mode fiber cables in an M580 system.		

Configuring an 8-Port MCSESM Dual-Ring Switch

When you download this DRS predefined configuration file to a switch, the file provides a set of operating parameters that enable the switch to operate with high efficiency in the specified architecture. Except when enabling or disabling ports that are not connected to either a main ring or a sub-ring, do not adjust the configuration parameters or alter the port usage in the predefined configuration file. Changing the configuration parameters or the port assignments can compromise the effectiveness and accuracy of the switch, as well as the performance of the RIO network.

For troubleshooting, you can enable/disable port mirroring and change the selection of the source ports that you want mirrored. Port mirroring is disabled by default. If you enable port mirroring, port 8 is the destination port, and ports 1, 2, 3, 5, and 6 are selected as source ports with TX/RX. For the Modicon switches (not the ConneXium switches), select **Allow Management** for the destination port in order to log in and manage the switch using this port.

⚠ WARNING

UNINTENDED EQUIPMENT OPERATION

- Do not modify any parameter in the DRS predefined configuration file you download to the switch, except enabling or disabling port mirroring on Ethernet ports
- Enable at least one port (preferably port 8) for switch management.

Failure to follow these instructions can result in death, serious injury, or equipment damage.

NOTE: Disable unused ports to help avoid unauthorized connection of devices or cabling errors which can lead to significant errors in communication.

Upgrading the firmware for a Modicon extended managed switch removes the predefined configuration file settings. When you download a predefined configuration file to a switch, the file provides a set of operating parameters that enable the switch to operate with high efficiency in the specified architecture.

⚠ WARNING

UNINTENDED EQUIPMENT OPERATION

Re-download the predefined configuration file to the switch before placing a switch with upgraded firmware back in operation.

Failure to follow these instructions can result in death, serious injury, or equipment damage.

To determine which predefined configuration file you need to download to each DRS in your network, refer to the diagrams later in this topic.

Changing a Predefined Configuration File

Overlaying a second predefined configuration file can damage the configuration file. Not disconnecting the cables that form the loop before you clear the first configuration file can cause a broadcast storm.

⚠ WARNING

UNINTENDED EQUIPMENT OPERATION

Disconnect the DRS in the RIO network and delete the original predefined configuration file in the switch before downloading a different configuration file to the switch.

Failure to follow these instructions can result in death, serious injury, or equipment damage.

If you decide to change a predefined configuration file that you downloaded to a DRS, follow the steps below.

Step	Action
1	Disconnect the cables that form the daisy chain loop in the RIO network.
2	Delete the predefined configuration file that you downloaded to the DRS.
3	Download the new predefined configuration file to the DRS.
4	Reconnect the cables to form the daisy chain loop in the RIO network.

Copper Main Ring Configurations

Some predefined configuration files let you use an MCSESM DRS with eight copper ports to connect an RIO copper main ring to either an RIO sub-ring or a DIO sub-ring:

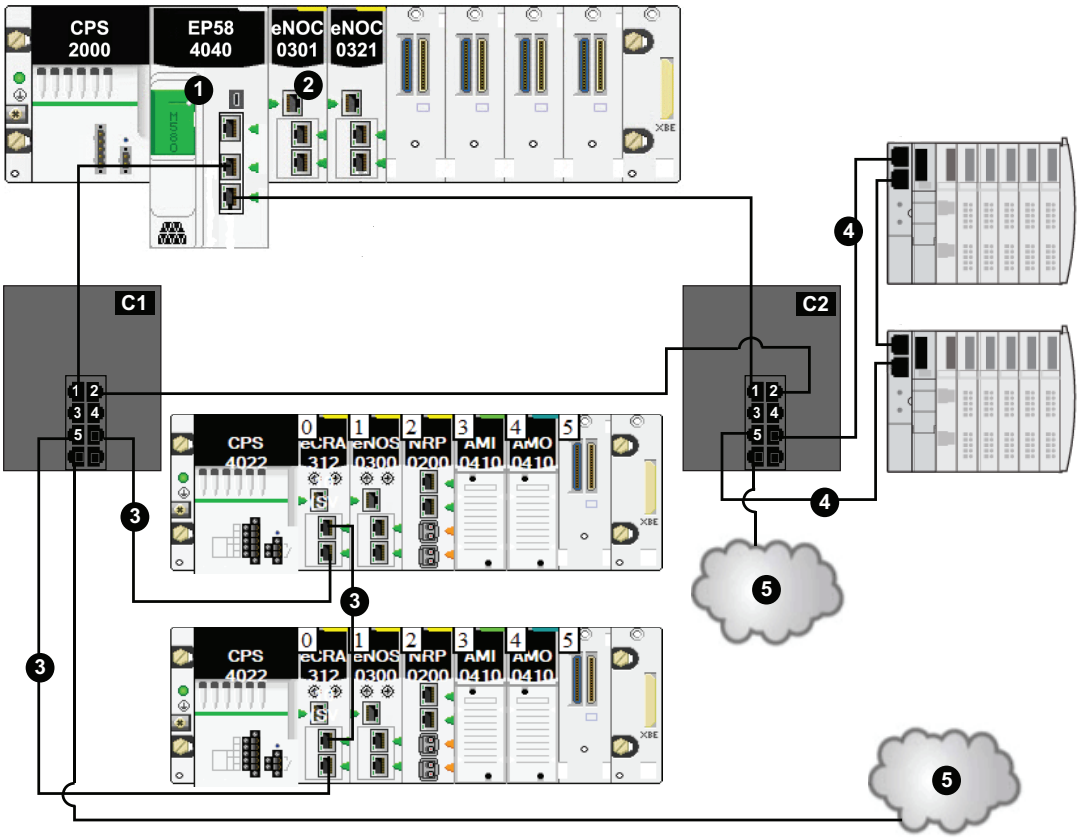

This table describes the switch configurations and the port functionality in the above illustration:

C1	DRS using the C1 predefined configuration file for a copper main ring with an RIO sub-ring and DIO clouds, page 44.
C2	DRS using the C2 predefined configuration file for a copper main ring with a DIO sub-ring and DIO clouds, page 48.
1	Controller with Ethernet I/O scanner service on the local rack
2	BMENOC0301/BMENOC0311/BMENOC0302(H) Ethernet communication module
3	RIO sub-ring

4	DIO sub-ring
5	DIO cloud

Fiber Main Ring Configurations

Some predefined configuration files let you use an MCSESM DRS with two fiber ports and eight copper ports to connect an RIO copper main ring to either an RIO sub-ring or a DIO sub-ring:

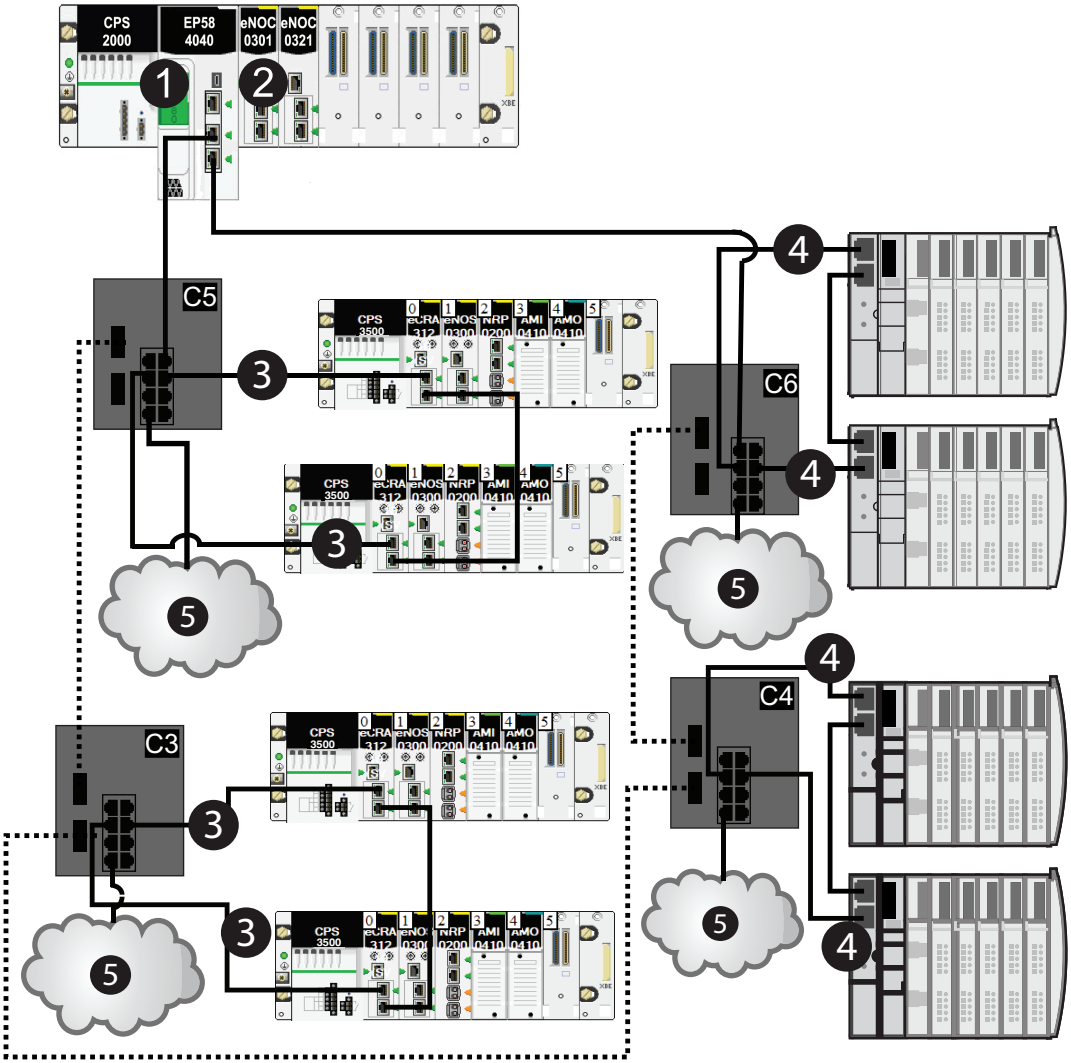

This table describes the switch configurations and the port functionality in the above illustration:

C3	DRS using the C3 predefined configuration file for a fiber main ring and copper RIO sub-ring with DIO clouds, page 51.
C4	DRS using the C4 predefined configuration file for a fiber main ring and copper DIO sub-ring with DIO clouds, page 56.
C5	DRS using the C5 predefined configuration file for fiber/copper main ring connections and an RIO sub-ring with DIO clouds, page 61.
C6	DRS using the C6 predefined configuration file for fiber/copper main ring connections and a DIO sub-ring with DIO clouds, page 66.
1	controller with Ethernet I/O scanner service on the local rack
2	BMENOC0301/BMENOC0311/BMENOC0302(H) module
3	RIO sub-ring
4	DIO sub-ring
5	DIO cloud

Main Ring / Sub-Ring Redundant Connections

Use two DRSs (one installed with a *master* predefined configuration and the other installed with a corresponding *slave* predefined configuration) to provide a redundant connection between the main ring and the sub-ring. The *master* DRS passes data between the main ring and the sub-ring. If the *master* DRS becomes inoperable, the *slave* DRS takes control and passes data between the main ring and the sub-ring.

Place the master DRS and slave DRS within 100m of each other, and do not insert devices between them on the main ring or on the sub-ring.

Cable segments longer than 100m are permitted using two BMXNRP0200 / BMSNRP0201 media converters and fiber cable to extend the distance of the following connections between the master DRS and slave DRS:

- the direct link between inner main ring ports 2 (main ring).
- the direct link between inner sub-ring ports 6 (sub-ring).

In this case, extend the cable connection distances using two BMXNRP0200 / BMSNRP0201 media converters as follows:

- copper connection from master switch port to media converter
- fiber connection from media converter to media converter
- copper connection from media converter to slave switch port

NOTE: DRS **inner ports** are the two ports on the switch that connect master ring ports to corresponding slave ring ports. When using two DRSs, master inner main ring ports connect to slave inner main ring ports. Likewise, master inner sub-ring ports connect to slave inner sub-ring ports.

- For copper/fiber port master and slave DRS redundant configurations, the inner ports (port 2) connect to each other for the main ring, and port 6 on both DRSs connect to each other for a sub-ring.

If you are using a single DRS but plan to convert to redundant configurations in the future, record these port configurations to reduce the number of any schematic changes required because of the conversion.

This figure shows two DRSs that create a redundant connection between the main ring and the RIO sub-ring:

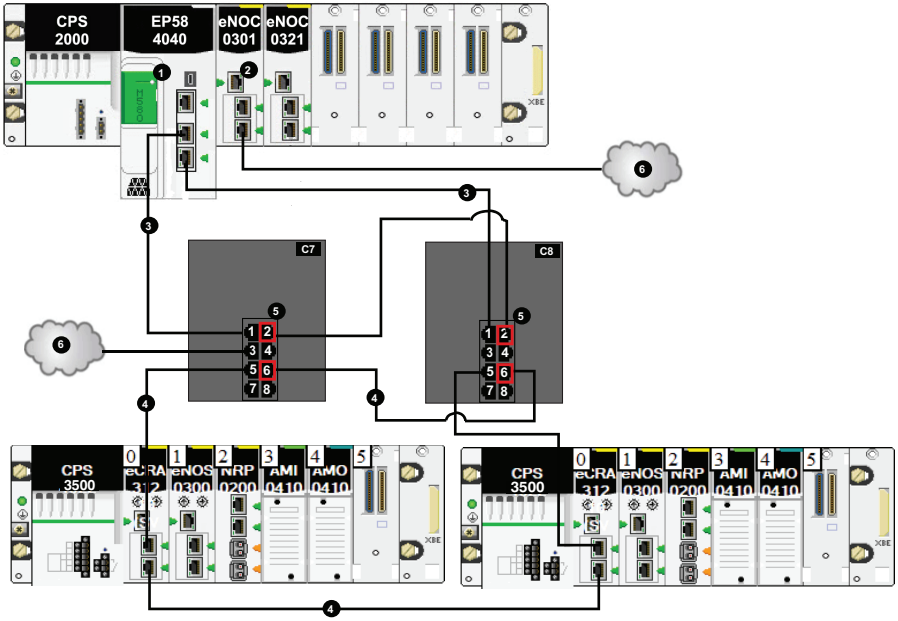

- Connect the inner port 2 on the master and slave DRSs to each other.

  NOTE: Port 1 on both DRSs form the main ring.

- Connect the inner port 6 on the master and slave DRSs to each other.

  NOTE: Port 5 on both DRSs form the sub-ring.

This table describes the switch configurations and the port functionality in the above illustration:

C7	master DRS using a C7 predefined configuration file for redundancy between the main ring and an RIO sub-ring (with non-redundant connections to DIO clouds), page 69.
C8	slave DRS using a C8 predefined configuration file for redundancy between the main ring and an RIO sub-ring (with non-redundant connections to DIO clouds), page 73.
1	controller with Ethernet I/O scanner service on the local rack
2	BMENOC0301/BMENOC0311/BMENOC0302(H) module
3	main ring
4	RIO sub-ring
5	inner ports (ports 2 for main ring, ports 6 for sub-ring)
6	DIO cloud

NOTE:

- A BMENOC0301/BMENOC0311/BMENOC0302(H) module can support distributed equipment through its Ethernet backplane connection to the controller and its device network port(s) on the front panel, respecting the limitation of 128 devices scanned per BMENOC0301/BMENOC0311/BMENOC0302(H) module.
- In an *auto configuration*, if the master loses communication, the slave assumes the master role. When the master regains communication or is replaced, it does not resume its master role. The slave continues acting as the master, and the master acts as the standby. The path of port 5 of the slave is set to 200000000 so that the sub-ring inner port does not act as the standby link. Port 5 becomes the standby link for the sub-ring.

In the event that *both* the master and slave DRSs lose communication and only the slave regains communication after a reboot, the slave, whether it has a master/slave or an auto configuration, is in a blocking state. The blocking state only changes to forwarding if the master DRS regains communication and its configuration is detected on at least one inner port.

Port Mirroring

In every predefined configuration, port 8 is reserved for port mirroring. Port mirroring lets you troubleshoot the transmissions sent over selected ports by copying the traffic that passes through these ports and sending the copied transmission to port 8, where you can examine the copied packets.

When using port mirroring, select the port(s), for which you want to analyze the traffic, as the source port(s) in the switch port mirror web page. Select port 8 as the destination port, and enable port mirroring.

When you download this DRS predefined configuration file to a switch, the file provides a set of operating parameters that enable the switch to operate with high efficiency in the specified architecture. Except when enabling or disabling ports that are not connected to either a main ring or a sub-ring, do not adjust the configuration parameters or alter the port usage in the predefined configuration file. Changing the configuration parameters or the port assignments can compromise the effectiveness and accuracy of the switch, as well as the performance of the RIO network.

For troubleshooting, you can enable/disable port mirroring and change the selection of the source ports that you want mirrored. Port mirroring is disabled by default. If you enable port mirroring, port 8 is the destination port, and ports 1, 2, 3, 5, and 6 are selected as source ports with TX/RX. For the Modicon switches (not the ConneXium switches), select **Allow Management** for the destination port in order to log in and manage the switch using this port.

⚠ WARNING

UNINTENDED EQUIPMENT OPERATION

- Do not modify any parameter in the DRS predefined configuration file you download to the switch, except enabling or disabling port mirroring on Ethernet ports
- Enable at least one port (preferably port 8) for switch management.

Failure to follow these instructions can result in death, serious injury, or equipment damage.

NOTE: Disable unused ports to help avoid unauthorized connection of devices or cabling errors which can lead to significant errors in communication.

C1: Copper RIO Main Ring and RIO Sub-ring with DIO Clouds

Predefined Configuration File Name

`C1_RIOMainRing_RIOSubRing_DIOCloudsVx.xx.cli`, where *`Vx.xx`* references the version number of the file.

Use of this Predefined Configuration

Using the M580 architecture, you can put some or all of your RIO drops on sub-rings. The RIO drops on the sub-rings are controlled by the controller on the main ring the same way as RIO drops connected directly to the main ring. The sub-ring architecture lets you extend the distance between consecutive RIO drops and isolate the devices and cables on a sub-ring from those on the main ring and on other sub-rings.

Devices Supported and Restricted in this Predefined Configuration

The DRS predefined configuration described here is for an MCSESM083F23F1 Modicon extended managed switch, which has 8 copper connection ports and no fiber port connections.

An RIO sub-ring can contain only approved RIO modules, for example an RIO adapter in an M580 RIO drop.

Distributed equipment, such as TeSys T motor devices and islands of STB or Modicon Edge I/O NTS devices, can be connected to switch ports that are not reserved for main ring and RIO sub-ring connections. Each cloud uses only one DRS port connection. You cannot use this predefined configuration to connect distributed equipment directly on the sub-ring.

Predefined Port Connections

Use the two top ports (shown as 1 and 2 below) for connections on the main ring (A). Use ports 5 and 6 to connect the main ring to an RIO sub-ring (B).

Ports 3, 4, 7, 9, and 10 are configured for connecting DIO clouds to the network. Port 8 is reserved for port mirroring, page 42 (to monitor the status of ports you previously selected in the switch port mirror web page).

NOTE: The default configuration of port 8 has port mirroring disabled.

Example:

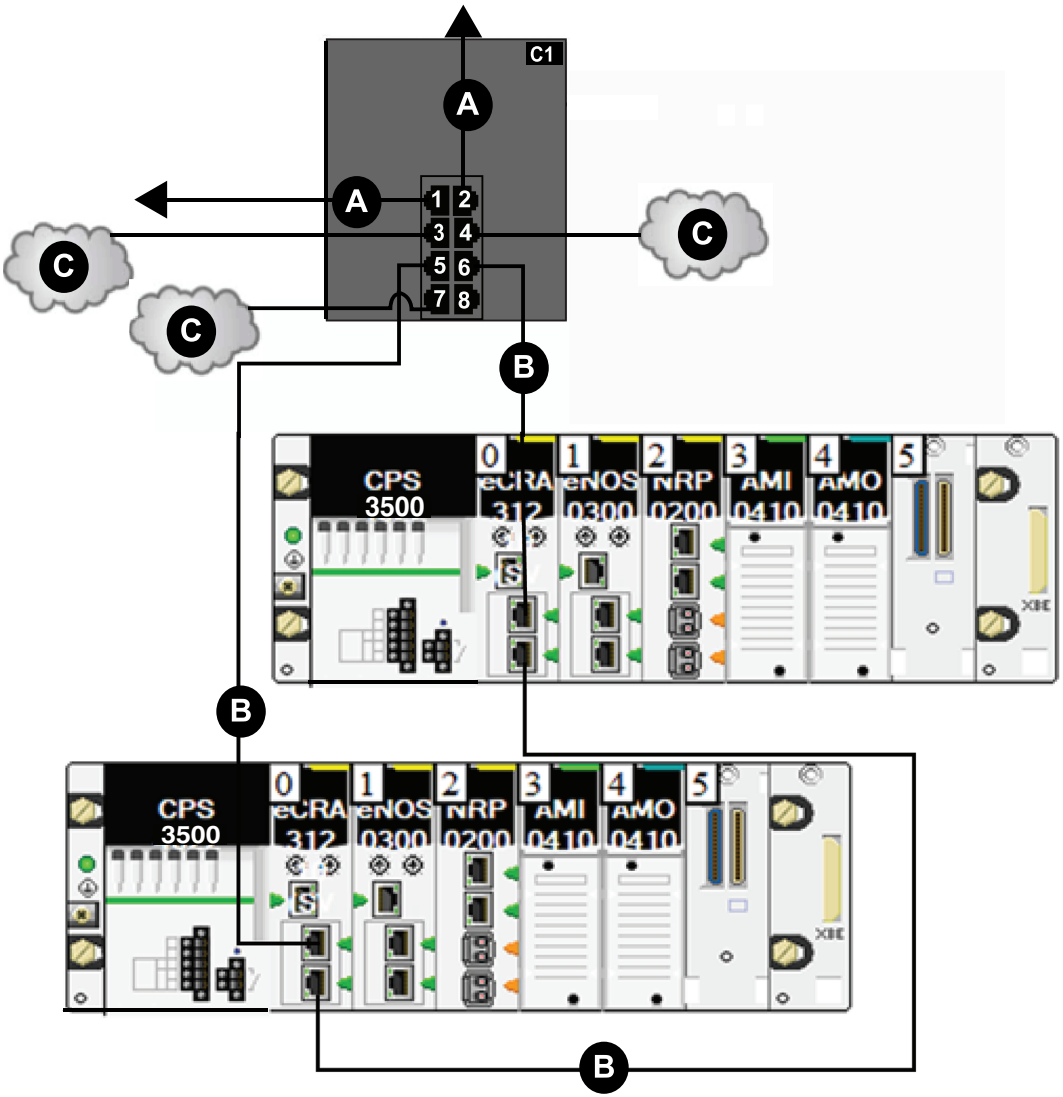

A DRS connection to the main ring

B DRS connecting an RIO sub-ring to the main ring

C DRS connecting a DIO cloud to the main ring

This table describes the functionality of the ports in the above illustration:

Port	Type	Description
1	100Base-TX	copper main ring connection
2	100Base-TX	copper main ring connection
3	100Base-TX	DIO cloud connection
4	100Base-TX	DIO cloud connection
5	100Base-TX	copper RIO sub-ring connection
6	100Base-TX	copper RIO sub-ring connection
7	100Base-TX	DIO cloud connection
8	100Base-TX	port mirroring connection

When you download this DRS predefined configuration file to a switch, the file provides a set of operating parameters that enable the switch to operate with high efficiency in the specified architecture. Except when enabling or disabling ports that are not connected to either a main ring or a sub-ring, do not adjust the configuration parameters or alter the port usage in the predefined configuration file. Changing the configuration parameters or the port assignments can compromise the effectiveness and accuracy of the switch, as well as the performance of the RIO network.

For troubleshooting, you can enable/disable port mirroring and change the selection of the source ports that you want mirrored. Port mirroring is disabled by default. If you enable port mirroring, port 8 is the destination port, and ports 1, 2, 3, 5, and 6 are selected as source ports with TX/RX. For the Modicon switches (not the ConneXium switches), select **Allow Management** for the destination port in order to log in and manage the switch using this port.

⚠ WARNING

UNINTENDED EQUIPMENT OPERATION

- Do not modify any parameter in the DRS predefined configuration file you download to the switch, except enabling or disabling port mirroring on Ethernet ports
- Enable at least one port (preferably port 8) for switch management.

Failure to follow these instructions can result in death, serious injury, or equipment damage.

NOTE: Disable unused ports to help avoid unauthorized connection of devices or cabling errors which can lead to significant errors in communication.

C2: Copper RIO Main Ring and DIO Sub-ring with DIO Clouds

Predefined Configuration File Name

`C2_RIOMainRing_DIOSubRing_DIOCloudsVx.xx.cli`, where *`Vx.xx`* references the version number of the file.

Use of this Predefined Configuration

In some applications, DIO clouds may not provide sufficient cable redundancy. With an M580 network, you can deploy distributed equipment in a way that takes advantage of the redundant cabling architecture. The following DRS predefined configuration enables you to support distributed equipment on sub-rings. A DIO sub-ring restores communications in the event of a broken wire or inoperable device on the sub-ring.

NOTE: Each DRS applies a lower priority to distributed equipment, and handles packets from an RIO network before handling packets relating to distributed equipment.

Devices Supported by this Predefined Configuration

The DRS predefined configuration described here is for an MCSESM083F23F1 Modicon extended managed switch, which has 8 copper connection ports and no fiber ports.

You cannot use RIO modules in a DIO sub-ring. Only distributed equipment with a dual-port embedded Ethernet switch and RSTP protocol support can be used. (In this manual, distributed equipment are represented by Modicon STB islands with STB NIP 2311 network interface modules.)

Predefined Port Connections

Use the 2 top ports (shown as 1 and 2 below) for the main ring connections. Use ports 5 and 6 to connect the DIO sub-ring to the main ring.

Ports 3, 4, and 7 can be used to connect DIO clouds to the M580 system. Port 8 is reserved for port mirroring, page 42, for instance., for monitoring the status of the ports you previously selected in the switch port mirror web page.

NOTE: The default configuration of port 8 has port mirroring disabled.

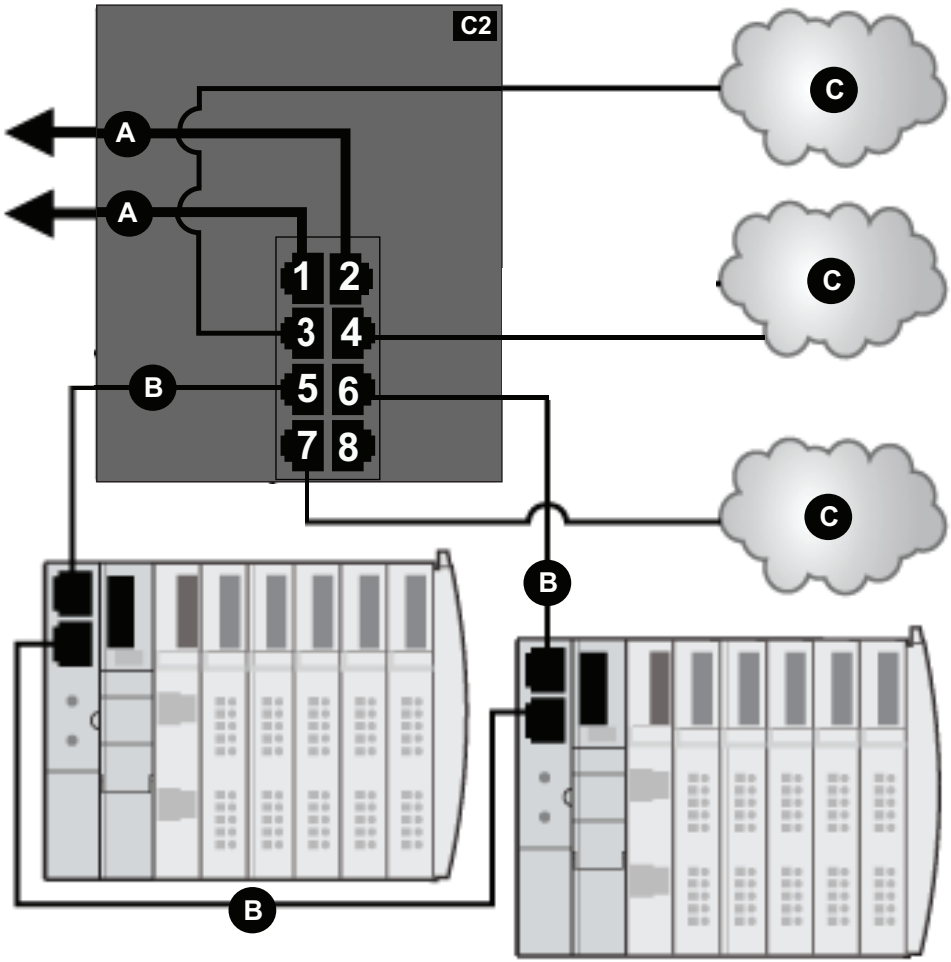

This table describes the functionality of the ports in the above illustration:

Port	Type	Description
1	100Base-TX	copper main ring connection
2	100Base-TX	copper main ring connection
3	100Base-TX	DIO cloud connection
4	100Base-TX	DIO cloud connection
5	100Base-TX	copper DIO sub-ring connection
6	100Base-TX	copper DIO sub-ring connection

Port	Type	Description
7	100Base-TX	DIO cloud connection
8	100Base-TX	port mirroring connection

When you download this DRS predefined configuration file to a switch, the file provides a set of operating parameters that enable the switch to operate with high efficiency in the specified architecture. Except when enabling or disabling ports that are not connected to either a main ring or a sub-ring, do not adjust the configuration parameters or alter the port usage in the predefined configuration file. Changing the configuration parameters or the port assignments can compromise the effectiveness and accuracy of the switch, as well as the performance of the RIO network.

For troubleshooting, you can enable/disable port mirroring and change the selection of the source ports that you want mirrored. Port mirroring is disabled by default. If you enable port mirroring, port 8 is the destination port, and ports 1, 2, 3, 5, and 6 are selected as source ports with TX/RX. For the Modicon switches (not the ConneXium switches), select **Allow Management** for the destination port in order to log in and manage the switch using this port.

⚠ WARNING

UNINTENDED EQUIPMENT OPERATION

- Do not modify any parameter in the DRS predefined configuration file you download to the switch, except enabling or disabling port mirroring on Ethernet ports
- Enable at least one port (preferably port 8) for switch management.

Failure to follow these instructions can result in death, serious injury, or equipment damage.

NOTE: Disable unused ports to help avoid unauthorized connection of devices or cabling errors which can lead to significant errors in communication.

C3: Fiber RIO Main Ring and Copper RIO Sub-ring with DIO Clouds

Predefined Configuration File Name

`C3_RIOMainRingFX_DIOSubRingTX_DIOCloudsVx.xx.cli`, where *`Vx.xx`* references the version number of the file.

Use of this Predefined Configuration

In some applications, long distances (up to 15 km) may exist between consecutive RIO devices on an M580 network. You can span these distances using single-mode or multi-mode fiber optic cable on the main ring of your network.

The relationship between the main ring and the RIO sub-rings is essentially the same as with only copper connections, page 44, with the following differences:

- the type of cable used on part of the main ring
- the type(s) of DRS(s) that you use to make the fiber connections

Devices Supported by this Predefined Configuration

The predefined configuration described here can be used with a DRS that supports either single-mode or multi-mode fiber cables.

- An MCSESM103F2CU1 Modicon extended dual ring switch has two ports that support multi-mode fiber.
- An MCSESM0103F2CS1 Modicon extended dual ring switch has two ports that support single-mode fiber.

Both switches have eight ports that support copper connections. Fiber cable can be used only on the main ring, not on the sub-rings.

With single-mode fiber cable, you can achieve distances up to 15 km on the main ring. With multi-mode fiber cable, you can achieve distances up to 2 km.

Predefined Port Connections

For this predefined configuration, use the two fiber ports (ports 1 and 2) for the main ring (A) connections. Use the middle two copper ports (ports 5 and 6) to connect an RIO sub-ring (B)

to the main ring. The sub-ring can contain only approved RIO modules. No distributed equipment is used in either the main ring or the sub-ring.

Ports 3, 4, 7, 9, and 10 on the DRS are available for additional optional connections, and can be used to connect DIO clouds to the M580 system. Port 8 is reserved for port mirroring, page 42, for instance., for monitoring the status of the ports you previously selected in the switch port mirror web page.

NOTE: The default configuration of port 8 has port mirroring disabled.

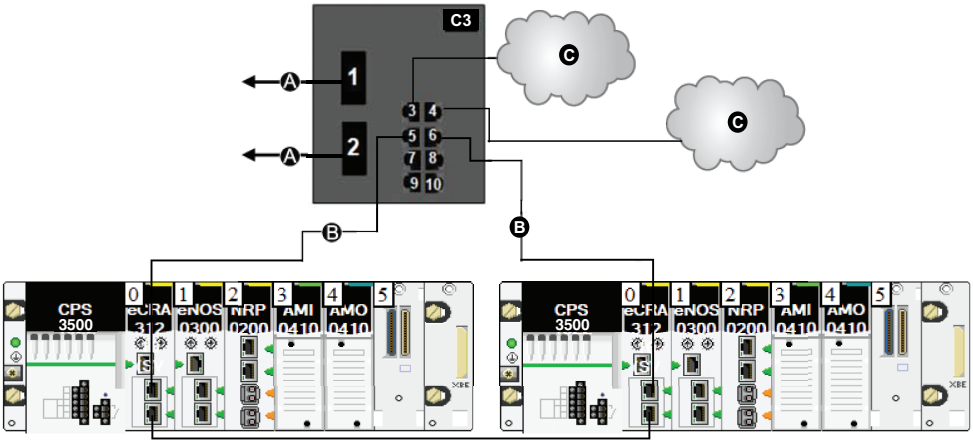

A DRS connection to the main ring using fiber cable

B DRS connecting the RIO sub-ring to the main ring using copper cable

C DRS connecting a DIO cloud to the main ring using copper cable

This table describes the functionality of the ports in the above illustration:

Port	Type	Description
1	FX	main ring fiber connection
2	FX	main ring fiber connection
3	100Base-TX	DIO cloud cable connection
4	100Base-TX	DIO cloud copper connection
5	100Base-TX	RIO sub-ring copper connection
6	100Base-TX	RIO sub-ring copper connection
7	100Base-TX	DIO cloud copper connection
8	100Base-TX	port mirroring connection
9	100Base-TX	DIO cloud connection
10	100Base-TX	DIO cloud connection

When you download this DRS predefined configuration file to a switch, the file provides a set of operating parameters that enable the switch to operate with high efficiency in the specified architecture. Except when enabling or disabling ports that are not connected to either a main ring or a sub-ring, do not adjust the configuration parameters or alter the port usage in the predefined configuration file. Changing the configuration parameters or the port assignments can compromise the effectiveness and accuracy of the switch, as well as the performance of the RIO network.

For troubleshooting, you can enable/disable port mirroring and change the selection of the source ports that you want mirrored. Port mirroring is disabled by default. If you enable port mirroring, port 8 is the destination port, and ports 1, 2, 3, 5, and 6 are selected as source ports with TX/RX. For the Modicon switches (not the ConneXium switches), select **Allow Management** for the destination port in order to log in and manage the switch using this port.

⚠ WARNING

UNINTENDED EQUIPMENT OPERATION

- Do not modify any parameter in the DRS predefined configuration file you download to the switch, except enabling or disabling port mirroring on Ethernet ports
- Enable at least one port (preferably port 8) for switch management.

Failure to follow these instructions can result in death, serious injury, or equipment damage.

NOTE: Disable unused ports to help avoid unauthorized connection of devices or cabling errors which can lead to significant errors in communication.

Supporting Fiber Links on the Main Ring

RIO devices in the main ring often do not come equipped with fiber connectors. Therefore, some part of the main ring requires copper cable. This predefined configuration is usually implemented with at least 2 other DRSs configured to support one fiber and one copper connection to the main ring, page 61.

In this example, the dashed line represents fiber cable and the solid line represents copper wire:

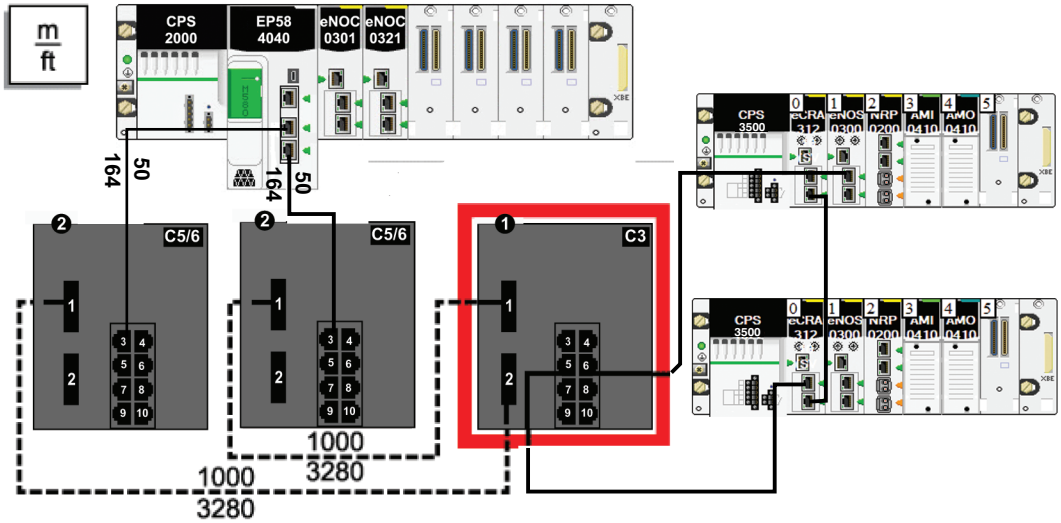

1 DRS with a C3 predefined configuration file uses two fiber ports that support the main ring and two copper ports that support an RIO sub-ring.

2 Two DRS with C5 or C6 predefined configuration files use one fiber port to support copper-to-fiber and fiber-to-copper transitions. They enable a fiber-based network to connect to the copper ports on the controller with Ethernet I/O scanner service in the local rack.

The DRS at location (1) uses this predefined configuration. The two DRSs at location (2) use a different predefined configuration, page 61.

> **NOTE:** You can also use BMXNRP020• fiber converter modules (see *Modicon M580 Frequently Used Architectures, System Guide*) instead of the two DRSs shown as location (2) in the above illustration.

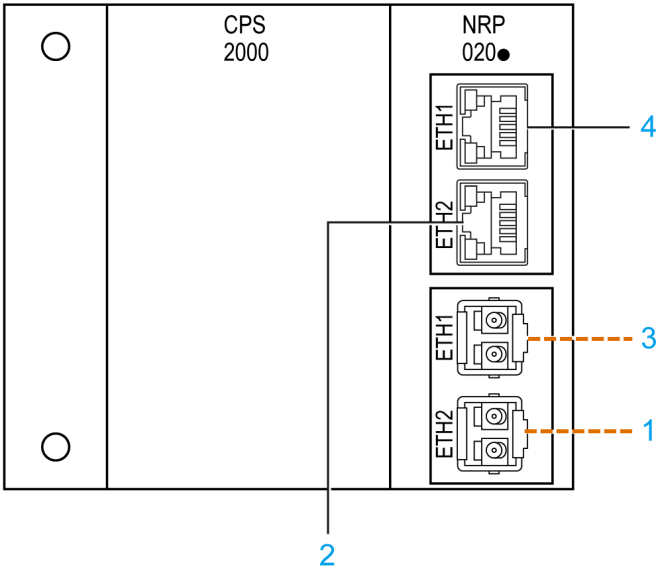

— — — — fiber cable

_____ copper cable

1 fiber cable connecting the ETH2 optical port of the BMXNRP020• module on the primary and secondary extended local racks

2 copper cable connected to the ETH3 RJ45 port of the communication module on the primary and secondary main local racks

3 not used

4 not used

C4: Fiber RIO Main Ring and Copper DIO Sub-ring with DIO Clouds

Predefined Configuration File Name

`C4_RIOMainRingFx_DIOSubRingTx_DIOCloudsVx.xx.cli`, where *`Vx.xx`* references the version number of the file.

Use of this Predefined Configuration

In some applications, you may need to install distributed equipment over a long distance (up to 15 km) from other devices on an M580 network. In other cases, the operating environment may require less susceptibility to electromagnetic interference (EMI) than a copper wire connection can provide. You may meet these needs by using single-mode or multi-mode fiber optic cable on the main ring of your network.

The relationship between the main ring and a DIO sub-ring is essentially the same as with a C2 predefined configuration file, page 48, with the following differences:

- the type of cable used to connect the DRS to the main ring
- the type(s) of DRS you use

Devices Supported by this Predefined Configuration

The predefined configuration described here can be used with a DRS that supports either single-mode or multi-mode fiber cable:

- An MCSESM103F2CU1 Modicon extended managed switch has two ports that support multi-mode fiber cable.
- An MCSESM103F2CS1 Modicon extended managed switch has two ports that support single-mode fiber cable.

Both switches have eight copper connections. Fiber cable can be used only on the main ring, not on the sub-rings.

With single-mode fiber cable, you can achieve distances on the main ring up to 15 km. With multi-mode fiber cable, you can achieve distances up to 2 km.

Predefined Port Connections

For this configuration, use the two fiber ports (labeled ports 1 and 2) for the main ring (A) connections. Use the two middle copper ports (labeled ports 5 and 6) to connect a DIO sub-ring (B) to the main ring.

Ports 3, 4, 7, 9, and 10 on the DRS are available for additional optional connections, and can be used to connect DIO clouds to the M580 system. Port 8 is reserved for port mirroring, page 42, for instance., for monitoring the status of the ports you previously selected in the switch port mirror web page.

NOTE: The default configuration of port 8 has port mirroring disabled.

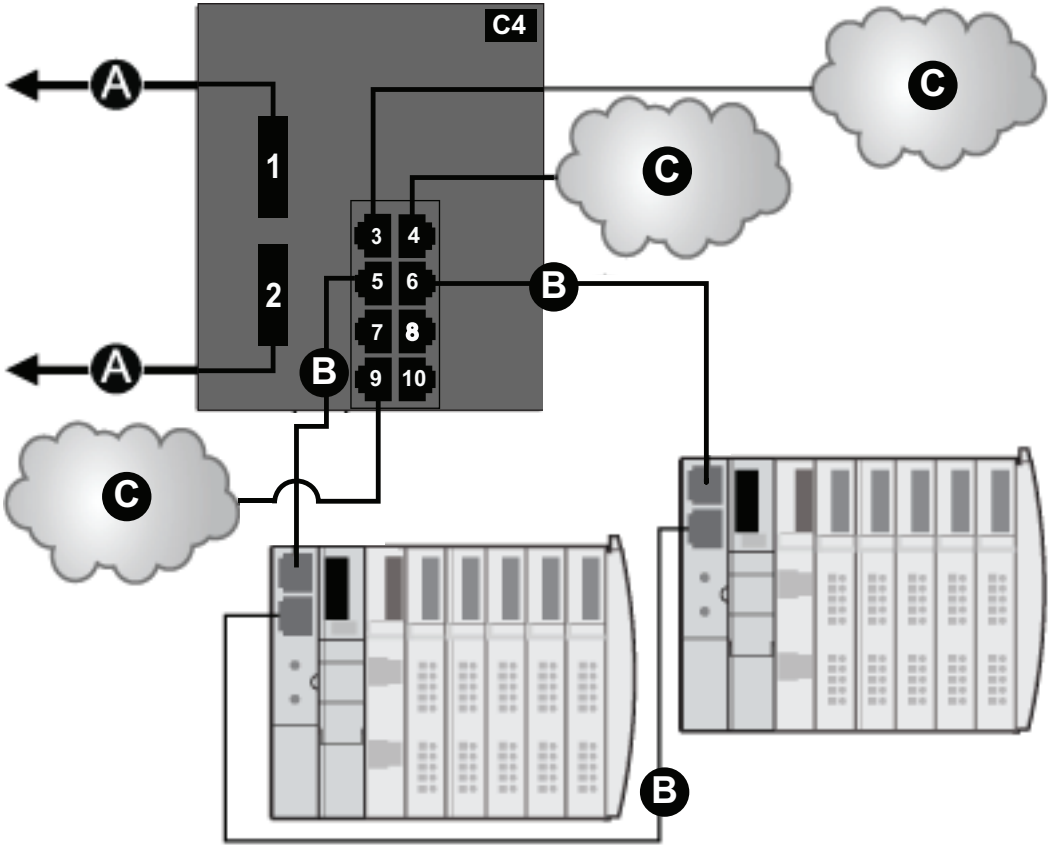

A DRS connection to the main ring using fiber cable

B DRS connecting the DIO sub-ring to the main ring

C DRS connecting a DIO cloud to the main ring

This table describes the functionality of the ports in the above illustration:

Port	Type	Description
1	FX	fiber main ring connection
2	FX	fiber main ring connection
3	100Base-TX	DIO cloud connection
4	100Base-TX	DIO cloud connection
5	100Base-TX	copper DIO sub-ring connection
6	100Base-TX	copper DIO sub-ring connection
7	100Base-TX	DIO cloud connection
8	100Base-TX	port mirroring connection
9	100Base-TX	DIO cloud connection
10	100Base-TX	DIO cloud connection

When you download this DRS predefined configuration file to a switch, the file provides a set of operating parameters that enable the switch to operate with high efficiency in the specified architecture. Except when enabling or disabling ports that are not connected to either a main ring or a sub-ring, do not adjust the configuration parameters or alter the port usage in the predefined configuration file. Changing the configuration parameters or the port assignments can compromise the effectiveness and accuracy of the switch, as well as the performance of the RIO network.

For troubleshooting, you can enable/disable port mirroring and change the selection of the source ports that you want mirrored. Port mirroring is disabled by default. If you enable port mirroring, port 8 is the destination port, and ports 1, 2, 3, 5, and 6 are selected as source ports with TX/RX. For the Modicon switches (not the ConneXium switches), select **Allow Management** for the destination port in order to log in and manage the switch using this port.

⚠ WARNING

UNINTENDED EQUIPMENT OPERATION

- Do not modify any parameter in the DRS predefined configuration file you download to the switch, except enabling or disabling port mirroring on Ethernet ports
- Enable at least one port (preferably port 8) for switch management.

Failure to follow these instructions can result in death, serious injury, or equipment damage.

NOTE: Disable unused ports to help avoid unauthorized connection of devices or cabling errors which can lead to significant errors in communication.

Supporting Fiber Links on the Main Ring

Distributed equipment in the main ring is often not equipped with fiber connections. In a system that uses fiber cable for long distance between the local backplane and distributed equipment, some parts of the main ring require copper cable to connect the distributed equipment to the ring. Use two dual-ring switches (4) with a C5 or C6 predefined configuration that allow both fiber and copper cable connection. Copper cable is used to link the local backplane to a dual-ring switch, which is connected via fiber cable to a second dual-ring switch for long distance. A third dual-ring switch (5) is introduced in the system to connect a distributed sub-ring (6) to this switch via copper cable. The third switch is also connected to one of the other switches, which connects the distributed equipment to the main backplane.

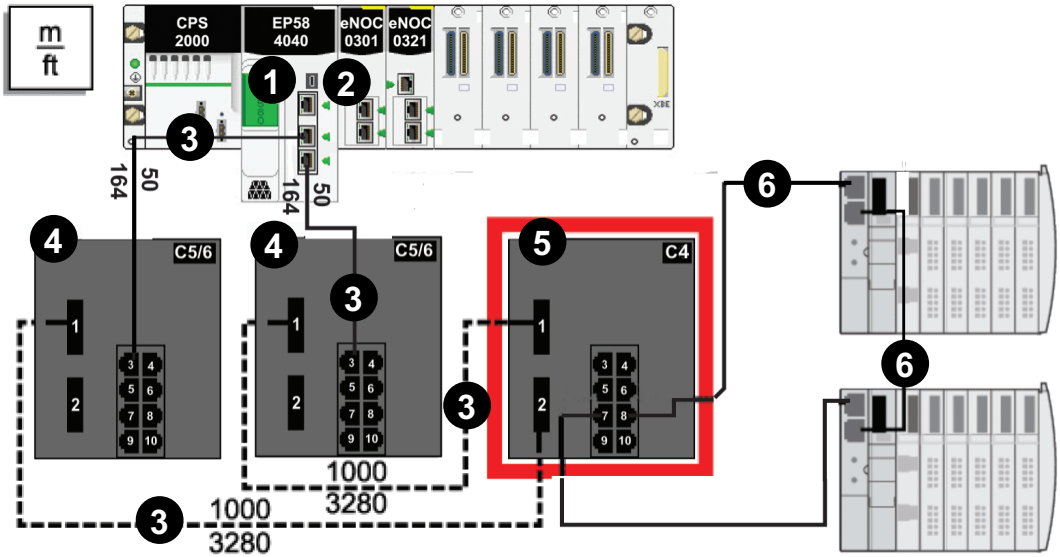

NOTE: The dashed line represents fiber cable, and the solid line represents copper wire.

1 controller with Ethernet I/O scanner service on the local backplane

2 BMENOC0301/BMENOC0311/BMENOC0302(H) Ethernet communication module that scans equipment on the main ring

3 Copper/fiber main ring

4 dual-ring switch with a C5 or C6 predefined configuration, which allows the switch to use copper and fiber cable

5 dual-ring switch with a C4 predefined configuration file that uses both its fiber ports to establish the main ring and a copper port to connect the distributed sub-ring to the main ring

6 distributed sub-ring with two Modicon STB islands or Modicon Edge I/O NTS islands.

NOTE:

- You can also use BMXNRP020• fiber converter modules instead of the two DRSs shown as 4 in the above illustration.
- A BMENOC0301/BMENOC0311/BMENOC0302(H) module can support distributed equipment through its Ethernet backplane connection to the controller and its device network port(s) on the front panel, respecting the limitation of 128 devices scanned per BMENOC0301/BMENOC0311/BMENOC0302(H) module.

C5: Copper/Fiber Main Ring Connections and RIO Sub-ring with DIO Clouds

Predefined Configuration File Name

`C5_RIOMainRingFxTx_RIOSubRingTx_DIOCloudsVx.xx.cli`, where *`Vx.xx`* references the version number of the file.

Use of this Predefined Configuration

Common uses of this predefined configuration are to transition from a copper cable to a fiber cable on the main ring or to transition from fiber to copper. An alternative use is to provide a long-haul return path for a copper network where the last RIO drop or RIO sub-ring in the daisy chain is far from the local rack.

This predefined configuration allows you to install an RIO sub-ring and/or some DIO clouds on the DRS you are configuring.

Devices Supported by this Predefined Configuration

The DRS predefined configuration described here can be used with either of these switch types:

- An MCSESM103F2CU1 Modicon extended managed switch, which supports multi-mode fiber cable
- An MCSESM103F2CS1 Modicon extended managed switch, which supports single-mode fiber cable

Both switches have two fiber ports and eight copper ports.

With single-mode fiber cable, you can achieve distances on the main ring up to 15 km. With multi-mode fiber cable, you can achieve distances up to 2 km.

Predefined Port Connections

The top fiber port (labeled #1 in the following figure) makes the connection to the fiber cable on the main ring (A). The other fiber port (port 2) is disabled in this predefined configuration; do not connect to this port.

The top left copper port (port 3) makes the connection to the copper cable on the main ring (A). Copper ports 5 and 6 are used to connect to the RIO sub-ring (B).

Ports 4, 7, 9, and 10 on the DRS are available for additional optional connections. Ports 4 and 7 can be used to connect DIO clouds to the M580 system. Port 8 is reserved for port mirroring, page 42, for instance., for monitoring the status of the ports you previously selected in the switch port mirror web page.

NOTE: The default configuration of port 8 has port mirroring disabled.

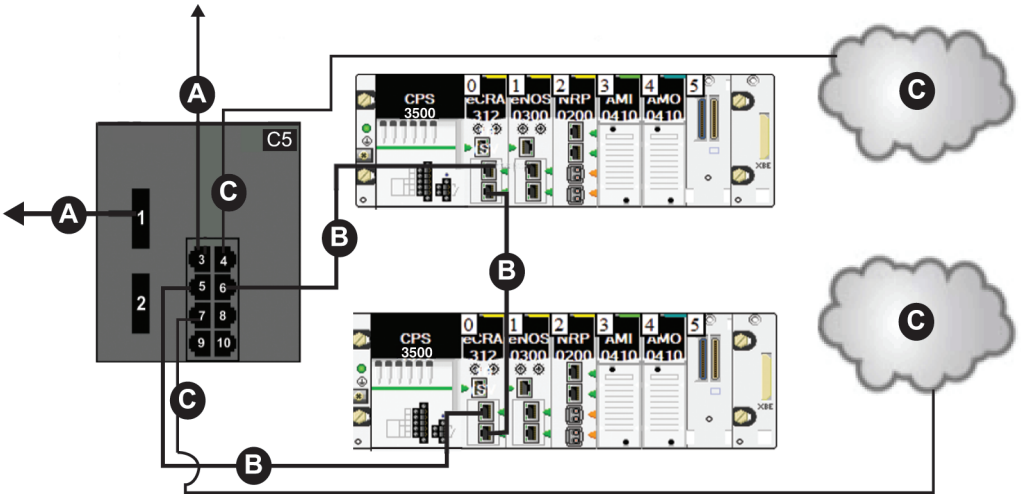

A from port 1 DRS connection to the main ring using fiber cable

A from port 3 DRS connection to the main ring using copper cable

B DRS connecting an RIO sub-ring to the main ring

C DRS connecting a DIO cloud to the main ring

This table describes the functionality of the ports in the preceding illustration:

Port	Type	Description
1	FX	fiber main ring connection
2	FX	disabled fiber port; do not use
3	100Base-TX	copper main ring connection
4	100Base-TX	DIO cloud connection
5	100Base-TX	RIO sub-ring connection
6	100Base-TX	RIO sub-ring connection
7	100Base-TX	DIO cloud connection

Port	Type	Description
8	100Base-TX	port mirroring connection
9	100Base-TX	DIO cloud connection
10	100Base-TX	DIO cloud connection

When you download this DRS predefined configuration file to a switch, the file provides a set of operating parameters that enable the switch to operate with high efficiency in the specified architecture. Except when enabling or disabling ports that are not connected to either a main ring or a sub-ring, do not adjust the configuration parameters or alter the port usage in the predefined configuration file. Changing the configuration parameters or the port assignments can compromise the effectiveness and accuracy of the switch, as well as the performance of the RIO network.

For troubleshooting, you can enable/disable port mirroring and change the selection of the source ports that you want mirrored. Port mirroring is disabled by default. If you enable port mirroring, port 8 is the destination port, and ports 1, 2, 3, 5, and 6 are selected as source ports with TX/RX. For the Modicon switches (not the ConneXium switches), select **Allow Management** for the destination port in order to log in and manage the switch using this port.

⚠ WARNING

UNINTENDED EQUIPMENT OPERATION

- Do not modify any parameter in the DRS predefined configuration file you download to the switch, except enabling or disabling port mirroring on Ethernet ports
- Enable at least one port (preferably port 8) for switch management.

Failure to follow these instructions can result in death, serious injury, or equipment damage.

NOTE: Disable unused ports to help avoid unauthorized connection of devices or cabling errors which can lead to significant errors in communication.

Supporting the Fiber-to-Copper Transition on the Main Ring

RIO devices in the main ring often do not come equipped with fiber connectors. Therefore, some part of the main ring requires copper cable. Typically, two DRSs are each configured to support one fiber and one copper connection to the main ring.

Connect the DRS directly to the controller in the local rack:

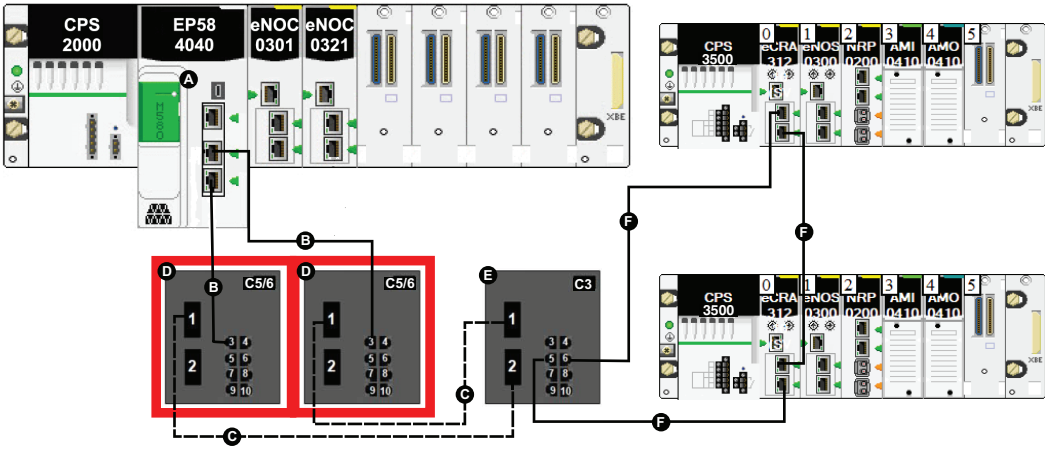

A controller with Ethernet I/O scanner service on the local rack

B DRS connection to the copper portion of the main ring

C DRS connection to the fiber portion of the main ring

D DRS with a C5 or C6 predefined configuration file that use only one fiber port to support copper-to-fiber or fiber-to-copper transitions

E DRS with a C3 predefined configuration file that uses both of the main ring fiber ports and both of the EIO remote sub-ring ports

F DRS connecting an RIO sub-ring to the main ring

NOTE:

- You can also use BMXNRP020• fiber converter modules (see *Modicon M580 Frequently Used Architectures, System Guide*) instead of the two DRSs shown as C in the above illustration.
- A BMENOC0301/BMENOC0311/BMENOC0302(H) module can support distributed equipment through its Ethernet backplane connection to the controller and its device network port(s) on the front panel, respecting the limitation of 128 devices scanned per BMENOC0301/BMENOC0311/BMENOC0302(H) module.

A Long-Haul Return Path

Suppose your application calls for several RIO drops. The distance between the first drop and local rack is no more than 100 m, and the distance between consecutive RIO drops is not more than 100 m. The overall distance between the controller and the last drop,

however, is significantly more than 100 m, for example, a distance of 400 m from the local rack.

In this case, you may be able to get the distance you need using copper connections on the front end of the high capacity daisy chain, and then closing the loop with one fiber optic connection:

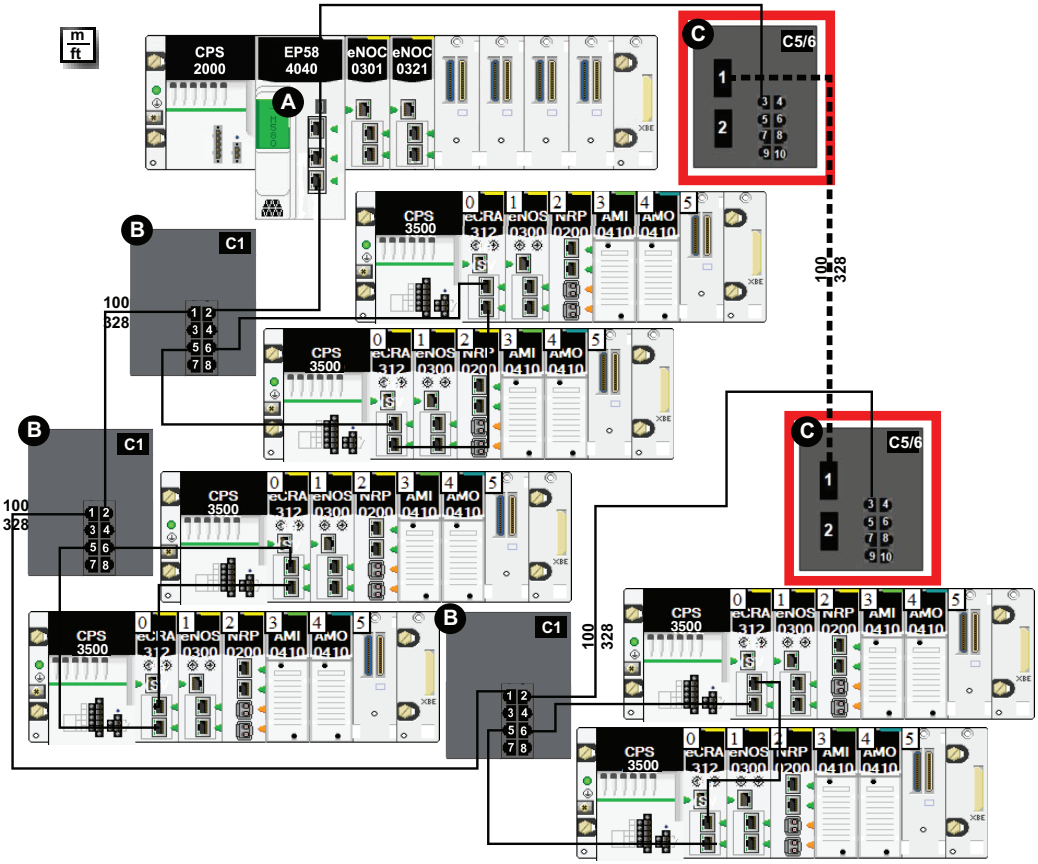

A M580 controller on the local rack

B DRS with a C1 predefined configuration file for a copper main ring and a copper sub-ring

C DRS with C5 or C6 predefined configuration files to facilitate a fiber-to-copper transition on the main ring

> **NOTE:** You can also use BMXNRP020• fiber converter modules (see *Modicon M580 Frequently Used Architectures, System Guide*) instead of the two DRSs (C in the above illustration).

C6: Copper/Fiber Main Ring Connections and DIO Sub-ring with DIO Clouds

Predefined Configuration File Name

`C6_RIOMainRingFxTx_DIOSubRingTx_DIOCloudsVx.xx.cli`, where *`Vx.xx`* references the version number of the file.

Use of this Predefined Configuration

With this predefined configuration downloaded, a DRS can be used to make the transition from copper to fiber or from fiber to copper on the main ring. The switch can also support a DIO sub-ring.

NOTE: Each DRS applies a lower priority to distributed equipment, and handles packets from an RIO network before handling packets relating to distributed equipment.

Devices Supported by this Predefined Configuration

Distributed equipment includes an embedded dual-port Ethernet switch and supports the RSTP protocol. (In this manual, Modicon STB islands with STB NIP 2311 network interface modules are used for illustration.)

The predefined configuration described here can be used with either of these DRS types:

- An MCSESM103F2CU1 Modicon extended managed switch, which supports multi-mode fiber cable
- An MCSESM103F2CS1 Modicon extended managed switch, which supports single-mode fiber cable

Both switches have two fiber ports and eight copper ports.

With single-mode fiber cable, you can achieve distances on the main ring up to 15 km. With multi-mode fiber cable, you can achieve distances up to 2 km.

Port Connections

The top fiber port (port 1 in the following graphic) makes the connection to the fiber cable on the main ring (A). The other fiber port (port 2) is disabled; do not connect to this port.

The top left copper port (port 3) makes the connection to the copper cable on the main ring (A). Copper ports 5 and 6 are used to connect to the DIO sub-ring (B).

Ports 4, 7, 9, and 10 can be used for other purposes. Port 8 is reserved for port mirroring, page 42, for instance., for monitoring the status of the ports you previously selected in the switch port mirror web page.

NOTE: The default configuration of port 8 has port mirroring disabled.

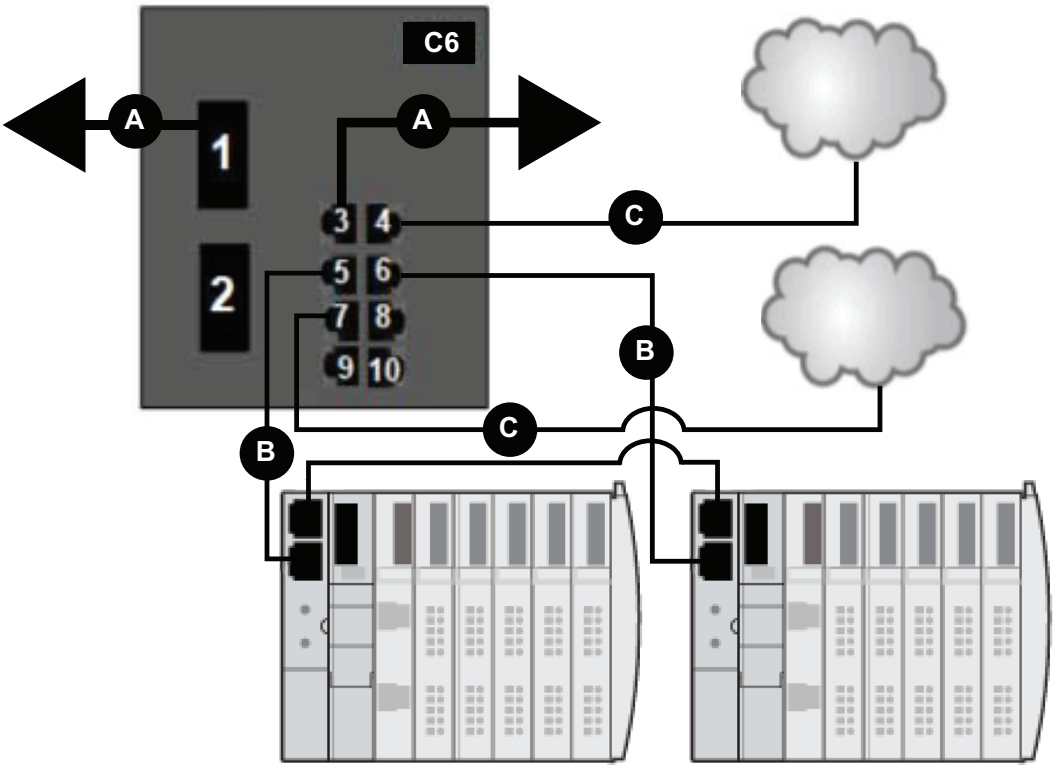

A DRS connection to the fiber portion of the main ring

B DRS connecting a DIO sub-ring to the copper portion of the main ring

C DRS connecting a DIO cloud to the copper portion of the main ring

This table describes the functionality of the ports in the above illustration:

Port	Type	Description
1	FX	fiber main ring connection
2	FX	disabled fiber port; do not use
3	100Base-TX	copper main ring connection

Port	Type	Description
4	100Base-TX	DIO cloud connection
5	100Base-TX	DIO sub-ring connection
6	100Base-TX	DIO sub-ring connection
7	100Base-TX	DIO cloud connection
8	100Base-TX	port mirroring connection
9	100Base-TX	DIO cloud connection
10	100Base-TX	DIO cloud connection

When you download this DRS predefined configuration file to a switch, the file provides a set of operating parameters that enable the switch to operate with high efficiency in the specified architecture. Except when enabling or disabling ports that are not connected to either a main ring or a sub-ring, do not adjust the configuration parameters or alter the port usage in the predefined configuration file. Changing the configuration parameters or the port assignments can compromise the effectiveness and accuracy of the switch, as well as the performance of the RIO network.

For troubleshooting, you can enable/disable port mirroring and change the selection of the source ports that you want mirrored. Port mirroring is disabled by default. If you enable port mirroring, port 8 is the destination port, and ports 1, 2, 3, 5, and 6 are selected as source ports with TX/RX. For the Modicon switches (not the ConneXium switches), select **Allow Management** for the destination port in order to log in and manage the switch using this port.

⚠ WARNING

UNINTENDED EQUIPMENT OPERATION

- Do not modify any parameter in the DRS predefined configuration file you download to the switch, except enabling or disabling port mirroring on Ethernet ports
- Enable at least one port (preferably port 8) for switch management.

Failure to follow these instructions can result in death, serious injury, or equipment damage.

NOTE: Disable unused ports to help avoid unauthorized connection of devices or cabling errors which can lead to significant errors in communication.

C7: Master Copper RIO Main Ring and RIO Sub-ring with DIO Clouds

Predefined Configuration File Name

`C7_Master_RIOMainRing_RIOSubRing_DIOCloudsVx.xx.cli`, where *`Vx.xx`* references the version number of the file.

Use of this Predefined Configuration

Using the M580 architecture, you can put some or all of your RIO drops on sub-rings. The RIO drops on the sub-rings are controlled by the controller on the main ring the same way as RIO drops connected directly to the main ring. The sub-ring architecture lets you extend the distance between consecutive RIO drops and isolate the devices and cables on a sub-ring from those on the main ring and on other sub-rings.

This predefined configuration sets the role to AUTO. Do not change this setting.

NOTE: In an *auto configuration*, if the master loses communication, the slave assumes the master role. When the master regains communication or is replaced, it does not resume its master role. The slave continues acting as the master, and the master acts as the standby. The path of port 5 of the slave is set to 200000000 so that the sub-ring inner port does not act as the standby link. Port 5 becomes the standby link for the sub-ring.

NOTE: Do not mix Modicon DRS (MCSESM) and ConneXium DRS (TCSESM) in a redundant configuration. Confirm that the master and slave DRS joining redundant connections are the same type of device: both are Modicon DRS (MCSESM) or both are ConneXium DRS (TCSESM).

Devices Supported and Restricted in this Predefined Configuration

The DRS predefined configuration described here is for an MCSESM083F23F1 Modicon extended managed switch, which has eight copper connection ports and no fiber port connections.

An RIO sub-ring can contain only approved RIO modules.

Distributed equipment, such as TeSys T motor drives and islands of STB devices, can be connected to switch ports that are not reserved for main ring and RIO sub-ring connections.

Each cloud uses only one DRS port connection. You cannot use this predefined configuration to connect distributed equipment directly on the sub-ring.

You cannot use a redundant pair of DRSs to connect a sub-ring to another sub-ring.

Place the master DRS and slave DRS within 100m of each other, and do not insert devices between them on the main ring or on the sub-ring.

Cable segments longer than 100m are permitted using two BMXNRP0200 / BMSNRP0201 media converters and fiber cable to extend the distance of the following connections between the master DRS and slave DRS:

- the direct link between inner main ring ports 2 (main ring).
- the direct link between inner sub-ring ports 6 (sub-ring).

In this case, extend the cable connection distances using two BMXNRP0200 / BMSNRP0201 media converters as follows:

- copper connection from master switch port to media converter
- fiber connection from media converter to media converter
- copper connection from media converter to slave switch port

NOTE: DRS **inner ports** are the two ports on the switch that connect master ring ports to corresponding slave ring ports. When using two DRSs, master inner main ring ports connect to slave inner main ring ports. Likewise, master inner sub-ring ports connect to slave inner sub-ring ports.

- For copper/fiber port master and slave DRS redundant configurations, the inner ports (port 2) connect to each other for the main ring, and port 6 on both DRSs connect to each other for a sub-ring.

If you are using a single DRS but plan to convert to redundant configurations in the future, record these port configurations to reduce the number of any schematic changes required because of the conversion.

Predefined Port Connections

Use the two top ports (shown as 1 and 2 in the following graphic) for main ring (A) redundant connections. Use ports 5 and 6 for the RIO sub-ring (B) redundant connections.

Ports 3, 4, and 7 are configured for connecting DIO clouds to the network. Port 8 is reserved for port mirroring, page 42 (to monitor the status of the ports you previously selected in the switch port mirror web page).

NOTE: The default configuration of port 8 has port mirroring disabled.

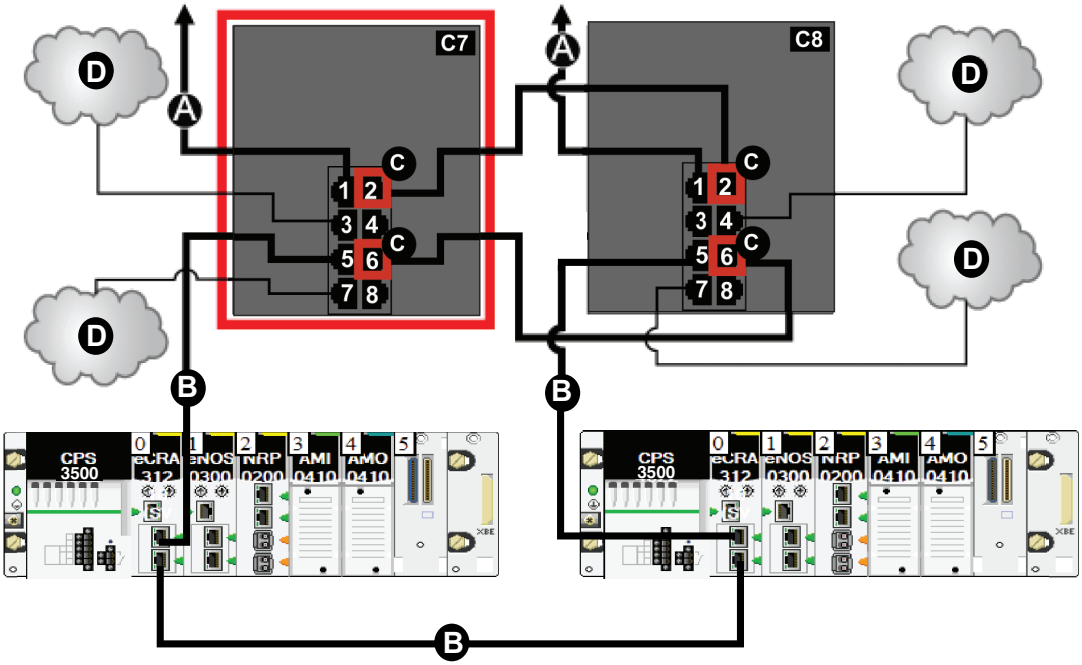

C7 master DRS using a C7 predefined configuration file to act as the master redundant connection between the main ring and the RIO sub-ring.

C8 slave DRS using a C8 predefined configuration file to act as the standby redundant connection between the main ring and the RIO sub-ring.

A DRS connection to the main ring

B DRS connecting an RIO sub-ring to the main ring

C DRS inner ports (the master and slave DRSs are linked together through ports 2 and 6).

NOTE: Port 1 is linked to the main ring, and port 5 is linked to the sub-ring.

D DRS connecting a DIO cloud to the main ring

This table describes the functionality of the ports in the above illustration:

Port	Type	Description
1	100Base-TX	copper main ring redundant connection
2	100Base-TX	copper main ring redundant connection
3	100Base-TX	DIO cloud connection
4	100Base-TX	DIO cloud connection
5	100Base-TX	copper RIO sub-ring redundant connection

Port	Type	Description
6	100Base-TX	copper RIO sub-ring redundant connection
7	100Base-TX	DIO cloud connection
8	100Base-TX	port mirroring connection

When you download this DRS predefined configuration file to a switch, the file provides a set of operating parameters that enable the switch to operate with high efficiency in the specified architecture. Except when enabling or disabling ports that are not connected to either a main ring or a sub-ring, do not adjust the configuration parameters or alter the port usage in the predefined configuration file. Changing the configuration parameters or the port assignments can compromise the effectiveness and accuracy of the switch, as well as the performance of the RIO network.

For troubleshooting, you can enable/disable port mirroring and change the selection of the source ports that you want mirrored. Port mirroring is disabled by default. If you enable port mirroring, port 8 is the destination port, and ports 1, 2, 3, 5, and 6 are selected as source ports with TX/RX. For the Modicon switches (not the ConneXium switches), select **Allow Management** for the destination port in order to log in and manage the switch using this port.

⚠ WARNING

UNINTENDED EQUIPMENT OPERATION

- Do not modify any parameter in the DRS predefined configuration file you download to the switch, except enabling or disabling port mirroring on Ethernet ports
- Enable at least one port (preferably port 8) for switch management.

Failure to follow these instructions can result in death, serious injury, or equipment damage.

NOTE: Disable unused ports to help avoid unauthorized connection of devices or cabling errors which can lead to significant errors in communication.

C8: Slave Copper RIO Main Ring and RIO Sub-ring with DIO Clouds

Predefined Configuration File Name

`C8_Slave_RIOMainRing_RIOSubRing_DIOCloudsVx.xx.cli`, where *`Vx.xx`* references the version number of the file.

Use of this Predefined Configuration

Using the M580 architecture, you can put some or all of your RIO drops on sub-rings. The RIO drops on the sub-rings are controlled by the controller on the main ring the same way as RIO drops connected directly to the main ring. The sub-ring architecture lets you extend the distance between consecutive RIO drops and isolate the devices and cables on a sub-ring from those on the main ring and on other sub-rings.

This predefined configuration sets the role to AUTO. Do not change this setting.

NOTE: In an *auto configuration*, if the master loses communication, the slave assumes the master role. When the master regains communication or is replaced, it does not resume its master role. The slave continues acting as the master, and the master acts as the standby. The path of port 5 of the slave is set to 200000000 so that the sub-ring inner port does not act as the standby link. Port 5 becomes the standby link for the sub-ring.

NOTE: Do not mix Modicon DRS (MCSESM) and ConneXium DRS (TCSESM) in a redundant configuration. Confirm that the master and slave DRS joining redundant connections are the same type of device: both are Modicon DRS (MCSESM) or both are ConneXium DRS (TCSESM).

Devices Supported and Restricted in this Predefined Configuration

The DRS predefined configuration described here is for an MCSESM083F23F1 Modicon extended managed switch, which has eight copper connection ports and no fiber port connections.

An RIO sub-ring can contain only approved RIO modules.

Distributed equipment, such as TeSys T motor drives and islands of STB devices, can be connected to switch ports that are not reserved for main ring and RIO sub-ring connections.

Each cloud uses only one DRS port connection. You cannot use this predefined configuration to connect distributed equipment directly on the sub-ring.

You cannot use a redundant pair of DRSs to connect a sub-ring to another sub-ring.

Place the master DRS and slave DRS within 100m of each other, and do not insert devices between them on the main ring or on the sub-ring.

Cable segments longer than 100m are permitted using two BMXNRP0200 / BMSNRP0201 media converters and fiber cable to extend the distance of the following connections between the master DRS and slave DRS:

- the direct link between inner main ring ports 2 (main ring).
- the direct link between inner sub-ring ports 6 (sub-ring).

In this case, extend the cable connection distances using two BMXNRP0200 / BMSNRP0201 media converters as follows:

- copper connection from master switch port to media converter
- fiber connection from media converter to media converter
- copper connection from media converter to slave switch port

NOTE: DRS **inner ports** are the two ports on the switch that connect master ring ports to corresponding slave ring ports. When using two DRSs, master inner main ring ports connect to slave inner main ring ports. Likewise, master inner sub-ring ports connect to slave inner sub-ring ports.

- For copper/fiber port master and slave DRS redundant configurations, the inner ports (port 2) connect to each other for the main ring, and port 6 on both DRSs connect to each other for a sub-ring.

If you are using a single DRS but plan to convert to redundant configurations in the future, record these port configurations to reduce the number of any schematic changes required because of the conversion.

Predefined Port Connections

Use the two top ports (shown as 1 and 2 in the following graphic) for main ring (A) redundant connections. Use ports 5 and 6 for the RIO sub-ring (B) redundant connections.

Ports 3, 4, and 7 are configured for connecting DIO clouds to the network. Port 8 is reserved for port mirroring, page 42, for instance., for monitoring the status of the ports you previously selected in the switch port mirror web page.

NOTE: The default configuration of port 8 has port mirroring disabled.

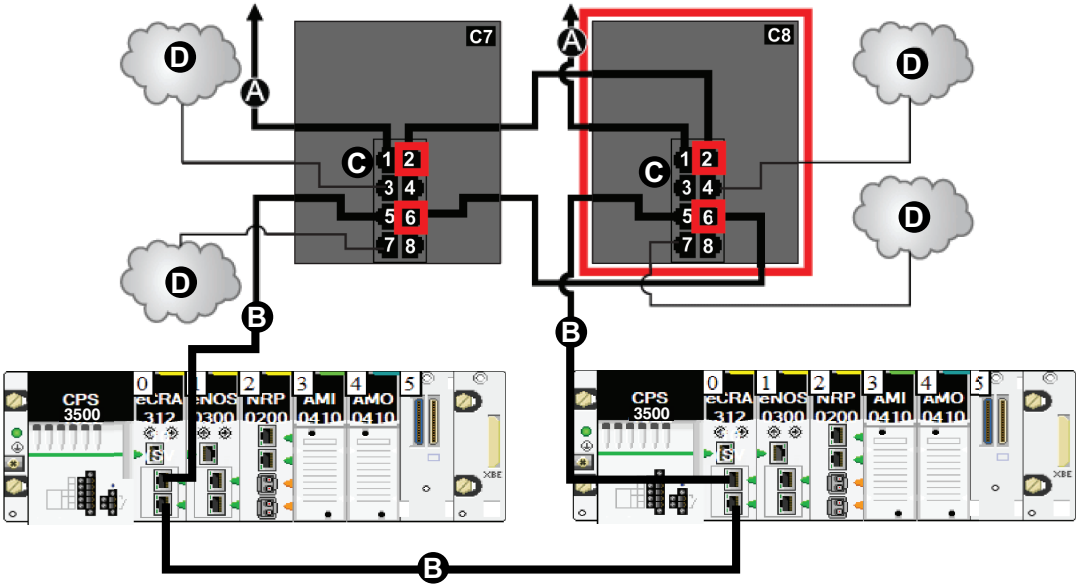

C7 master DRS using a C7 predefined configuration file to act as the master redundant connection between the main ring and the RIO sub-ring.

C8 slave DRS using a C8 predefined configuration file to act as the standby redundant connection between the main ring and the RIO sub-ring.

A DRS connection to the main ring

B DRS connecting an RIO sub-ring to the main ring

C DRS inner ports (the master and slave DRSs are linked together through ports 2 and 6).

NOTE: Port 1 is linked to the main ring, and port 5 is linked to the sub-ring.

D DRS connecting a DIO cloud to the main ring

The following table describes the functionality of the ports in the above illustration:

Port	Type	Description
1	100Base-TX	copper main ring redundant connection
2	100Base-TX	copper main ring redundant connection
3	100Base-TX	DIO cloud connection
4	100Base-TX	DIO cloud connection
5	100Base-TX	copper RIO sub-ring redundant connection
6	100Base-TX	copper RIO sub-ring redundant connection

Port	Type	Description
7	100Base-TX	DIO cloud connection
8	100Base-TX	port mirroring connection

When you download this DRS predefined configuration file to a switch, the file provides a set of operating parameters that enable the switch to operate with high efficiency in the specified architecture. Except when enabling or disabling ports that are not connected to either a main ring or a sub-ring, do not adjust the configuration parameters or alter the port usage in the predefined configuration file. Changing the configuration parameters or the port assignments can compromise the effectiveness and accuracy of the switch, as well as the performance of the RIO network.

For troubleshooting, you can enable/disable port mirroring and change the selection of the source ports that you want mirrored. Port mirroring is disabled by default. If you enable port mirroring, port 8 is the destination port, and ports 1, 2, 3, 5, and 6 are selected as source ports with TX/RX. For the Modicon switches (not the ConneXium switches), select **Allow Management** for the destination port in order to log in and manage the switch using this port.

⚠ WARNING

UNINTENDED EQUIPMENT OPERATION

- Do not modify any parameter in the DRS predefined configuration file you download to the switch, except enabling or disabling port mirroring on Ethernet ports
- Enable at least one port (preferably port 8) for switch management.

Failure to follow these instructions can result in death, serious injury, or equipment damage.

NOTE: Disable unused ports to help avoid unauthorized connection of devices or cabling errors which can lead to significant errors in communication.

C9: Master Copper RIO Main Ring and DIO Sub-ring with DIO Clouds

Predefined Configuration File Name

`C9_Master_RIOMainRing_DIOSubRing_DIOCloudsVx.xx.cli`, where *`Vx.xx`* references the version number of the file.

Use of this Predefined Configuration

In some applications, DIO clouds may not provide sufficient cable redundancy. With an M580 network, you can deploy distributed equipment in a way that takes advantage of the redundant cabling architecture. The following DRS predefined configuration enables you to support distributed equipment on sub-rings. A DIO sub-ring restores communications in the event of a broken wire or inoperable device on the sub-ring.

This predefined configuration sets the role to AUTO. Do not change this setting.

NOTE: In an *auto configuration*, if the master loses communication, the slave assumes the master role. When the master regains communication or is replaced, it does not resume its master role. The slave continues acting as the master, and the master acts as the standby. The path of port 5 of the slave is set to 200000000 so that the sub-ring inner port does not act as the standby link. Port 5 becomes the standby link for the sub-ring.

NOTE: Each DRS applies a lower priority to distributed equipment, and handles packets from an RIO network before handling packets relating to distributed equipment.

NOTE: Do not mix Modicon DRS (MCSESM) and ConneXium DRS (TCSESM) in a redundant configuration. Confirm that the master and slave DRS joining redundant connections are the same type of device: both are Modicon DRS (MCSESM) or both are ConneXium DRS (TCSESM).

Devices Supported by this Predefined Configuration

The DRS predefined configuration described here is for an MCSESM083F23F1 Modicon extended managed switch, which has eight copper connection ports and no fiber ports.

You cannot use RIO modules in a DIO sub-ring. Only distributed equipment with a dual-port embedded Ethernet switch and RSTP protocol support can be used. (In this manual, distributed equipment is represented by STB islands with STB NIP 2311 network interface modules or Modicon Edge I/O NTS islands with NTSNEC1200(H) network interface modules.)

You cannot use a redundant pair of DRSs to connect a sub-ring to another sub-ring.

Place the master DRS and slave DRS within 100m of each other, and do not insert devices between them on the main ring or on the sub-ring.

Cable segments longer than 100m are permitted using two BMXNRP0200 / BMSNRP0201 media converters and fiber cable to extend the distance of the following connections between the master DRS and slave DRS:

- the direct link between inner main ring ports 2 (main ring).
- the direct link between inner sub-ring ports 6 (sub-ring).

In this case, extend the cable connection distances using two BMXNRP0200 / BMSNRP0201 media converters as follows:

- copper connection from master switch port to media converter
- fiber connection from media converter to media converter
- copper connection from media converter to slave switch port

NOTE: DRS **inner ports** are the two ports on the switch that connect master ring ports to corresponding slave ring ports. When using two DRSs, master inner main ring ports connect to slave inner main ring ports. Likewise, master inner sub-ring ports connect to slave inner sub-ring ports.

- For copper/fiber port master and slave DRS redundant configurations, the inner ports (port 2) connect to each other for the main ring, and port 6 on both DRSs connect to each other for a sub-ring.

If you are using a single DRS but plan to convert to redundant configurations in the future, record these port configurations to reduce the number of any schematic changes required because of the conversion.

Predefined Port Connections

Use the two top ports (shown as 1 and 2 in the following graphic) for the main ring redundant connections. Use ports 5 and 6 for the DIO sub-ring redundant connections.

Ports 3, 4, and 7 can be used to connect DIO clouds to the M580 system. Port 8 is reserved for port mirroring, page 42, for instance., for monitoring the status of the ports you previously selected in the switch port mirror web page.

NOTE: The default configuration of port 8 has port mirroring disabled.

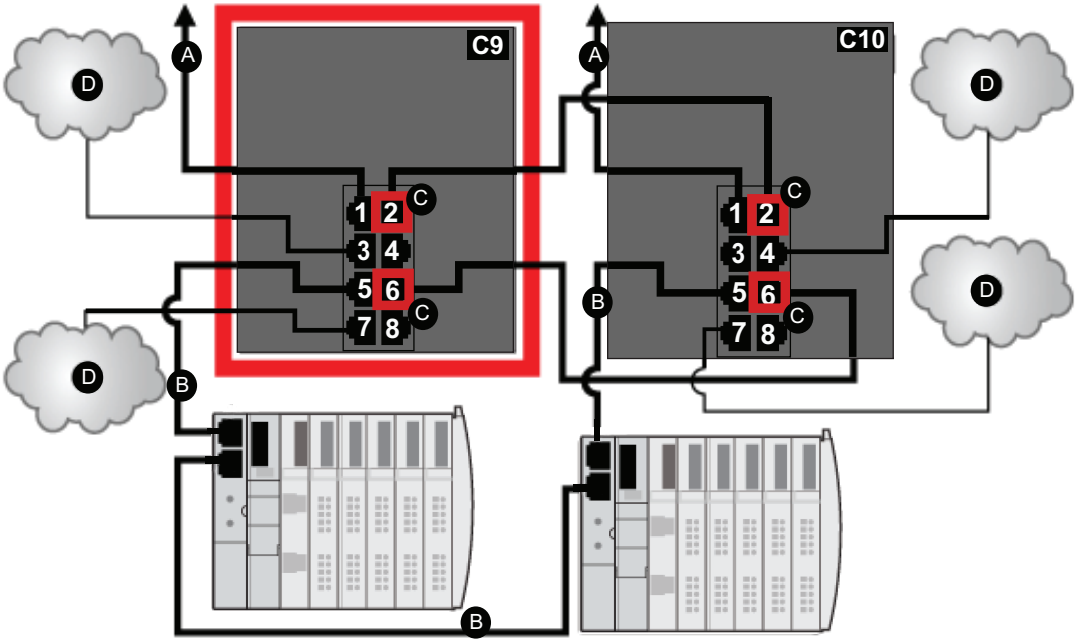

C9 master DRS using a C9 predefined configuration file to act as the master redundant connection between the main ring and the DIO sub-ring.

C10 slave DRS using a C10 predefined configuration file to act as the standby redundant connection between the main ring and the DIO sub-ring.

A DRS connection to the main ring

B DRS connecting a DIO sub-ring to the main ring

C DRS inner ports (the master and slave DRSs are linked together through ports 2 and 6).

NOTE: Ports 1 are linked to the main ring, and ports 5 are linked to the sub-ring.

D DRS connecting a DIO cloud to the main ring

This table describes the functionality of the ports in the above illustration:

Port	Type	Description
1	100Base-TX	copper main ring redundant connection
2	100Base-TX	copper main ring redundant connection
3	100Base-TX	DIO cloud connection
4	100Base-TX	DIO cloud connection
5	100Base-TX	copper DIO sub-ring redundant connection

Port	Type	Description
6	100Base-TX	copper DIO sub-ring redundant connection
7	100Base-TX	DIO cloud connection
8	100Base-TX	port mirroring connection

When you download this DRS predefined configuration file to a switch, the file provides a set of operating parameters that enable the switch to operate with high efficiency in the specified architecture. Except when enabling or disabling ports that are not connected to either a main ring or a sub-ring, do not adjust the configuration parameters or alter the port usage in the predefined configuration file. Changing the configuration parameters or the port assignments can compromise the effectiveness and accuracy of the switch, as well as the performance of the RIO network.

For troubleshooting, you can enable/disable port mirroring and change the selection of the source ports that you want mirrored. Port mirroring is disabled by default. If you enable port mirroring, port 8 is the destination port, and ports 1, 2, 3, 5, and 6 are selected as source ports with TX/RX. For the Modicon switches (not the ConneXium switches), select **Allow Management** for the destination port in order to log in and manage the switch using this port.

⚠ WARNING

UNINTENDED EQUIPMENT OPERATION

- Do not modify any parameter in the DRS predefined configuration file you download to the switch, except enabling or disabling port mirroring on Ethernet ports
- Enable at least one port (preferably port 8) for switch management.

Failure to follow these instructions can result in death, serious injury, or equipment damage.

NOTE: Disable unused ports to help avoid unauthorized connection of devices or cabling errors which can lead to significant errors in communication.

C10: Slave Copper RIO Main Ring and DIO Sub-ring with DIO Clouds

Predefined Configuration File Name

`C10_Slave_RIOMainRing_DIOSubRing_DIOCloudsVx.xx.cli`, where *`Vx.xx`* references the version number of the file.

Use of this Predefined Configuration

In some applications, DIO clouds may not provide sufficient cable redundancy. With an M580 network, you can deploy distributed equipment in a way that takes advantage of the redundant cabling architecture. The following DRS predefined configuration enables you to support distributed equipment on sub-rings. A DIO sub-ring restores communications in the event of a broken wire or inoperable device on the sub-ring.

This predefined configuration sets the role to AUTO. Do not change this setting.

NOTE: In an *auto configuration*, if the master loses communication, the slave assumes the master role. When the master regains communication or is replaced, it does not resume its master role. The slave continues acting as the master, and the master acts as the standby. The path of port 5 of the slave is set to 200000000 so that the sub-ring inner port does not act as the standby link. Port 5 becomes the standby link for the sub-ring.

NOTE: Each DRS applies a lower priority to distributed equipment, and handles packets from an RIO network before handling packets relating to distributed equipment.

NOTE: Do not mix Modicon DRS (MCSESM) and ConneXium DRS (TCSESM) in a redundant configuration. Confirm that the master and slave DRS joining redundant connections are the same type of device: both are Modicon DRS (MCSESM) or both are ConneXium DRS (TCSESM).

Devices Supported by this Predefined Configuration

The DRS predefined configuration described here is for an MCSESM083F23F1 Modicon extended managed switch, which has 8 copper connection ports and no fiber ports.

You cannot use RIO modules in a DIO sub-ring. Only distributed equipment with a dual-port embedded Ethernet switch and RSTP protocol support can be used. (In this manual, distributed equipment are represented by Modicon STB islands with STB NIP 2311 network interface modules or Modicon Edge I/O NTS islands with NTSNEC1200(H) network interface modules.)

You cannot use a redundant pair of DRSs to connect a sub-ring to another sub-ring.

Place the master DRS and slave DRS within 100m of each other, and do not insert devices between them on the main ring or on the sub-ring.

Cable segments longer than 100m are permitted using two BMXNRP0200 / BMSNRP0201 media converters and fiber cable to extend the distance of the following connections between the master DRS and slave DRS:

- the direct link between inner main ring ports 2 (main ring).
- the direct link between inner sub-ring ports 6 (sub-ring).

In this case, extend the cable connection distances using two BMXNRP0200 / BMSNRP0201 media converters as follows:

- copper connection from master switch port to media converter
- fiber connection from media converter to media converter
- copper connection from media converter to slave switch port

NOTE: DRS **inner ports** are the two ports on the switch that connect master ring ports to corresponding slave ring ports. When using two DRSs, master inner main ring ports connect to slave inner main ring ports. Likewise, master inner sub-ring ports connect to slave inner sub-ring ports.

- For copper/fiber port master and slave DRS redundant configurations, the inner ports (port 2) connect to each other for the main ring, and port 6 on both DRSs connect to each other for a sub-ring.

If you are using a single DRS but plan to convert to redundant configurations in the future, record these port configurations to reduce the number of any schematic changes required because of the conversion.

Predefined Port Connections

Use the two top ports (shown as 1 and 2 in the following graphic) for the main ring redundant connections. Use ports 5 and 6 for the DIO sub-ring redundant connections.

Ports 3, 4, and 7 can be used to connect DIO clouds to the M580 system. Port 8 is reserved for port mirroring, page 42 (to monitor the status of the ports you previously selected in the switch port mirror web page).

NOTE: The default configuration of port 8 has port mirroring disabled.

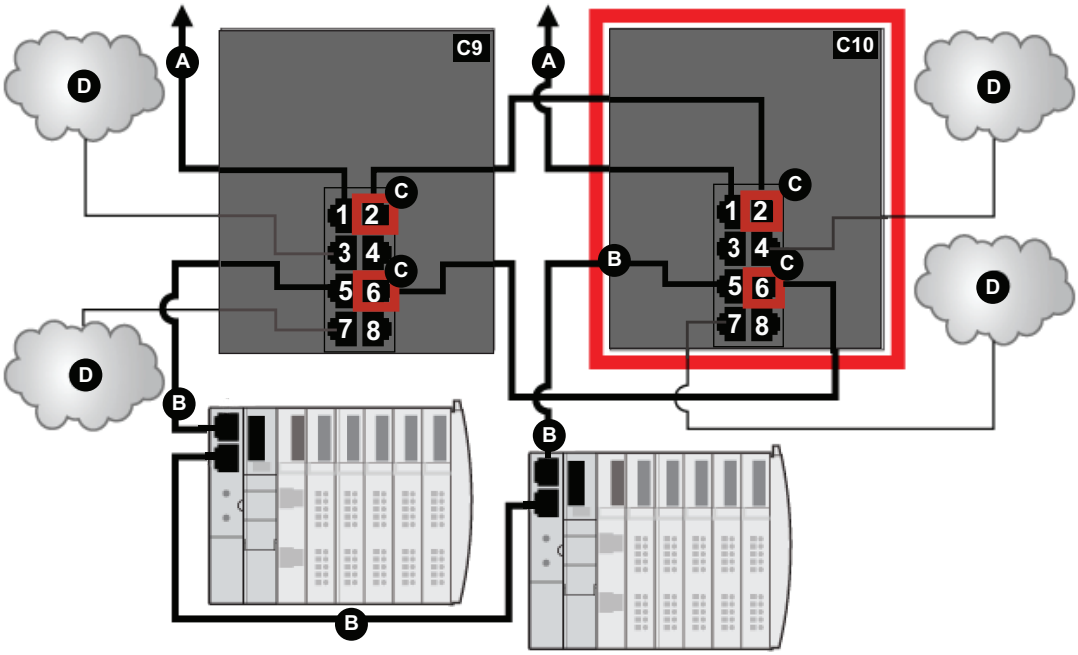

C9 master DRS using a C9 predefined configuration file to act as the master redundant connection between the main ring and the DIO sub-ring.

C10 slave DRS using a C10 predefined configuration file to act as the standby redundant connection between the main ring and the DIO sub-ring.

A DRS connection to the main ring

B DRS connecting a DIO sub-ring to the main ring

C DRS inner ports (the master and slave DRSs are linked together through ports 2 and 6).

NOTE: Ports 1 are linked to the main ring, and ports 5 are linked to the sub-ring.

D DRS connecting a DIO cloud to the main ring

This table describes the functionality of the ports in the above illustration:

Port	Type	Description
1	100Base-TX	copper main ring redundant connection
2	100Base-TX	copper main ring redundant connection
3	100Base-TX	DIO cloud connection
4	100Base-TX	DIO cloud connection
5	100Base-TX	copper DIO sub-ring redundant connection

Port	Type	Description
6	100Base-TX	copper DIO sub-ring redundant connection
7	100Base-TX	DIO cloud connection
8	100Base-TX	port mirroring connection

When you download this DRS predefined configuration file to a switch, the file provides a set of operating parameters that enable the switch to operate with high efficiency in the specified architecture. Except when enabling or disabling ports that are not connected to either a main ring or a sub-ring, do not adjust the configuration parameters or alter the port usage in the predefined configuration file. Changing the configuration parameters or the port assignments can compromise the effectiveness and accuracy of the switch, as well as the performance of the RIO network.

For troubleshooting, you can enable/disable port mirroring and change the selection of the source ports that you want mirrored. Port mirroring is disabled by default. If you enable port mirroring, port 8 is the destination port, and ports 1, 2, 3, 5, and 6 are selected as source ports with TX/RX. For the Modicon switches (not the ConneXium switches), select **Allow Management** for the destination port in order to log in and manage the switch using this port.

⚠ WARNING

UNINTENDED EQUIPMENT OPERATION

- Do not modify any parameter in the DRS predefined configuration file you download to the switch, except enabling or disabling port mirroring on Ethernet ports
- Enable at least one port (preferably port 8) for switch management.

Failure to follow these instructions can result in death, serious injury, or equipment damage.

NOTE: Disable unused ports to help avoid unauthorized connection of devices or cabling errors which can lead to significant errors in communication.

C11: Master Copper/Fiber Main Ring Connections and RIO Sub-ring with DIO Clouds

Predefined Configuration File Name

`C11_Master_RIOMainRingFxTx_RIOSubRingTx_DIOCloudsVx.xx.cli`, where *`Vx.xx`* references the version number of the file.

Use of this Predefined Configuration

Common uses of this predefined configuration are to transition from a copper cable to a fiber cable on the main ring or to transition from fiber to copper. An alternative use is to provide a long-haul return path for a copper network where the last RIO drop or RIO sub-ring in the daisy chain is far from the local rack.

This predefined configuration allows you to install an RIO sub-ring and/or some DIO clouds on the DRS you are configuring.

With this predefined configuration, use two DRSs — one installed with this *master* predefined configuration and the other installed with the corresponding *slave* predefined configuration (C12, page 92) — to provide a redundant connection between the main ring and an RIO sub-ring. The *master* DRS passes data between the main ring and the RIO sub-ring. If the *master* DRS becomes inoperable, the *slave* DRS takes control and passes data between the main ring and the RIO sub-ring.

NOTE: DRS inner ports are the two ports on the switch that are connected to the main ring. When using two DRSs, connect the designated master inner ports to the designated slave inner ports.

- For copper/fiber port master and slave DRS redundant configurations, the inner ports (port 3) connect to each other for the main ring, and port 6 on both DRSs connect to each other for a sub-ring.

NOTE: In an *auto configuration*, if the master loses communication, the slave assumes the master role. When the master regains communication or is replaced, it does not resume its master role. The slave continues acting as the master, and the master acts as the standby. The path of port 5 of the slave is set to 200000000 so that the sub-ring inner port does not act as the standby link. Port 5 becomes the standby link for the sub-ring.

In the event that both the master and slave DRSs lose communication and only the slave regains communication after a reboot, the slave, whether it has a master/slave or an auto configuration, is in a blocking state. The blocking state only changes to forwarding if the master DRS regains communication and its configuration is detected on at least one inner port.

NOTE: Do not mix Modicon DRS (MCSESM) and ConneXium DRS (TCSESM) in a redundant configuration. Confirm that the master and slave DRS joining redundant connections are the same type of device: both are Modicon DRS (MCSESM) or both are ConneXium DRS (TCSESM).

Devices Supported and Restricted in this Predefined Configuration

The DRS predefined configuration described here can be used with either of these switch types:

- An MCSESM103F2CU1 Modicon extended managed switch, which supports multi-mode fiber cable
- An MCSESM103F2CS1 Modicon extended managed switch, which supports single-mode fiber cable

Both switches have two fiber ports and eight copper ports.

With single-mode fiber cable, you can achieve distances on the main ring up to 15 km. With multi-mode fiber cable, you can achieve distances up to 2 km.

You cannot use a redundant pair of DRSs to connect a sub-ring to another sub-ring.

Place the master DRS and slave DRS within 100m of each other, and do not insert devices between them on the main ring or on the sub-ring.

Cable segments longer than 100m are permitted using two BMXNRP0200 / BMSNRP0201 media converters and fiber cable to extend the distance of the following connections between the master DRS and slave DRS:

- the direct link between inner main ring ports 3 (main ring).
- the direct link between inner sub-ring ports 6 (sub-ring).

In this case, extend the cable connection distances using two BMXNRP0200 / BMSNRP0201 media converters as follows:

- copper connection from master switch port to media converter
- fiber connection from media converter to media converter
- copper connection from media converter to slave switch port

Predefined Port Connections

The top fiber port (labeled 1 in the figure below) makes the redundant connection to the fiber cable on the main ring (A). The other fiber port (port 2) is disabled in this predefined configuration; do not connect to this port.

The top left copper ports (port 3) make the redundant connection to the copper cable on the main ring (B). Copper ports 5 and 6 are used for the RIO sub-ring (C) redundant connections. Ports 4, 7, 9, and 10 are used for DIO cloud connections. Port 8 is reserved for port mirroring, page 42, for instance., for monitoring the status of the ports you previously selected in the switch port mirror web page.

NOTE: The default configuration of port 8 has port mirroring disabled.

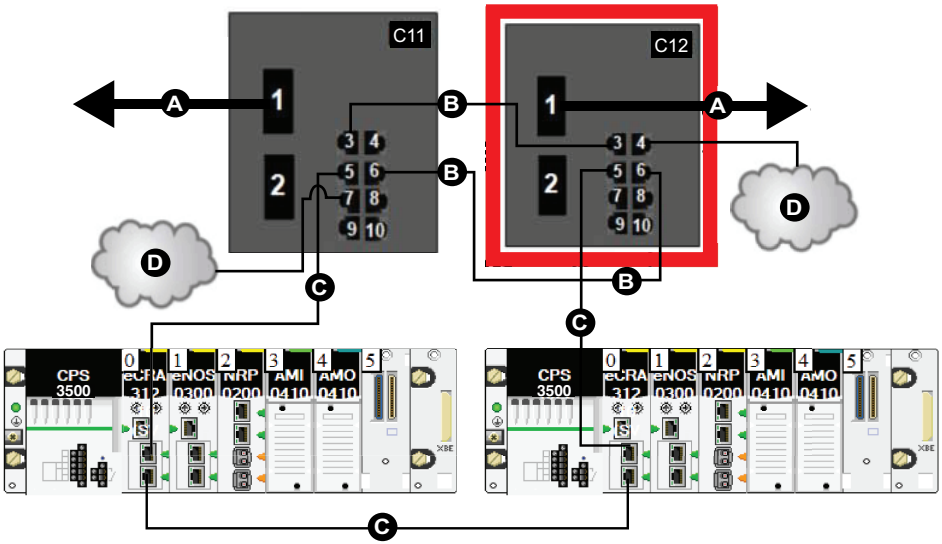

C11 master DRS using a C11 predefined configuration file to act as the master redundant connection between the main ring and the RIO sub-ring.

C12 slave DRS using a C12 predefined configuration file to act as the standby redundant connection between the main ring and the RIO sub-ring.

A DRS connection to the fiber portion of the main ring

B DRS inner ports (the master and slave DRSs are linked together through ports 3 and 6.

NOTE: Port 1 is linked to the main ring, and port 5 is linked to the sub-ring.

C DRS connecting an RIO sub-ring to the main ring

D DRS connecting a DIO cloud to the main ring

This table describes the functionality of the ports in the above illustration:

Port	Type	Description
1	FX	fiber main ring redundant connection
2	FX	disabled fiber port; do not use
3	100Base-TX	copper main ring redundant connection

Port	Type	Description
4	100Base-TX	DIO cloud connection
5	100Base-TX	RIO sub-ring redundant connection
6	100Base-TX	RIO sub-ring redundant connection
7	100Base-TX	DIO cloud connection
8	100Base-TX	port mirroring connection
9	100Base-TX	DIO cloud connection
10	100Base-TX	DIO cloud connection

When you download this DRS predefined configuration file to a switch, the file provides a set of operating parameters that enable the switch to operate with high efficiency in the specified architecture. Except when enabling or disabling ports that are not connected to either a main ring or a sub-ring, do not adjust the configuration parameters or alter the port usage in the predefined configuration file. Changing the configuration parameters or the port assignments can compromise the effectiveness and accuracy of the switch, as well as the performance of the RIO network.

For troubleshooting, you can enable/disable port mirroring and change the selection of the source ports that you want mirrored. Port mirroring is disabled by default. If you enable port mirroring, port 8 is the destination port, and ports 1, 2, 3, 5, and 6 are selected as source ports with TX/RX. For the Modicon switches (not the ConneXium switches), select **Allow Management** for the destination port in order to log in and manage the switch using this port.

⚠ WARNING

UNINTENDED EQUIPMENT OPERATION

- Do not modify any parameter in the DRS predefined configuration file you download to the switch, except enabling or disabling port mirroring on Ethernet ports
- Enable at least one port (preferably port 8) for switch management.

Failure to follow these instructions can result in death, serious injury, or equipment damage.

NOTE: Disable unused ports to help avoid unauthorized connection of devices or cabling errors which can lead to significant errors in communication.

Supporting the Fiber-to-Copper Transition on the Main Ring

RIO modules in the main ring often do not come equipped with fiber connectors. Therefore, some part of the main ring requires copper cable. Typically, 2 DRSs are each configured to support 1 fiber and 1 copper connection to the main ring.

Connect the DRS to the controller in the local rack:

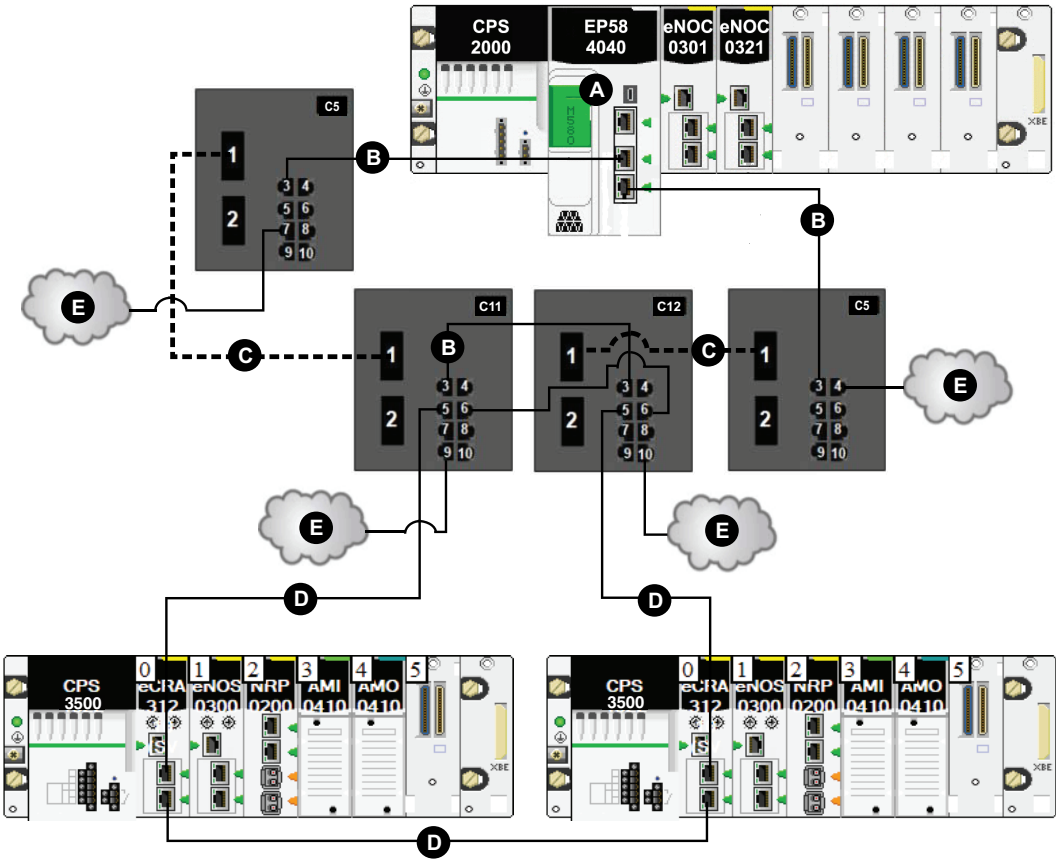

C5 DRS with a predefined configuration file that provides copper-to-fiber and fiber-to-copper transitions on the main ring

C11/12 DRS with a master or slave predefined configuration files that provides a redundant connection between the main ring and the RIO sub-ring (configured to use only one fiber port to support copper-to-fiber and fiber-to-copper transitions)

A controller on the local rack with Ethernet I/O scanner service

B DRS connection to the copper portion of the main ring (Ports 3 on the C11/C12 DRSs are connected to each other as the inner ports of the main ring.)

C DRS connection to the fiber portion of the main ring

D DRS connecting an RIO sub-ring to the main ring using copper cable

E DRS connecting a DIO cloud to the main ring using copper cable

NOTE:

- You can also use BMXNRP020• fiber converter modules instead of the two DRSs shown as C5 in the above illustration.
- A BMENOC0301/BMENOC0311/BMENOC0302(H) module can support distributed equipment through its Ethernet backplane connection to the controller and its device network port(s) on the front panel, respecting the limitation of 128 devices scanned per BMENOC0301/BMENOC0311/BMENOC0302(H) module.

C12: Slave Copper/Fiber Main Ring Connections and RIO Sub-ring with DIO Clouds

Predefined Configuration File Name

`C12_slave_RIOMainRingFxTx_RIOSubRingTx_DIOCloudsVx.xx.cli`, where *`Vx.xx`* references the version number of the file.

Use of this Predefined Configuration

Common uses of this predefined configuration are to transition from a copper cable to a fiber cable on the main ring or to transition from fiber to copper. An alternative use is to provide a long-haul return path for a copper network where the last RIO drop or RIO sub-ring in the daisy chain is far from the local rack.

This predefined configuration allows you to install an RIO sub-ring and/or some DIO clouds on the DRS you are configuring.

With this predefined configuration, use two DRSs — one installed with this slave predefined configuration and the other installed with the corresponding *master* predefined configuration (C11) — to provide a redundant connection between the main ring and an RIO sub-ring. The *master* DRS passes data between the main ring and the RIO sub-ring. If the *master* DRS becomes inoperable, the *slave* DRS takes control and passes data between the main ring and the RIO sub-ring.

> **NOTE:** In an *auto configuration*, if the master loses communication, the slave assumes the master role. When the master regains communication or is replaced, it does not resume its master role. The slave continues acting as the master, and the master acts as the standby. The path of port 5 of the slave is set to 200000000 so that the sub-ring inner port does not act as the standby link. Port 5 becomes the standby link for the sub-ring.

In the event that *both* the master and slave DRS lose communication and only the slave regains communication after a reboot, the slave, whether it has a master/slave or an auto configuration, is in a blocking state. The blocking state only changes to forwarding if the master DRS regains communication and its configuration is detected on at least one inner port.

NOTE: DRS inner ports are the two ports on the switch that are connected to the main ring. When using two DRS, connect the designated master inner ports to the designated slave inner ports.

- For copper/fiber port master and slave DRS redundant configurations, the inner ports (port 3) connect to each other for the main ring, and port 6 on both DRSs connect to each other for a sub-ring.

If you are using a single DRS but plan to convert to redundant configurations in the future, record these port configurations to reduce the number of any schematic changes required because of the conversion.

NOTE: Do not mix Modicon DRS (MCSESM) and ConneXium DRS (TCSESM) in a redundant configuration. Confirm that the master and slave DRS joining redundant connections are the same type of device: both are Modicon DRS (MCSESM) or both are ConneXium DRS (TCSESM).

Devices Supported and Restricted in this Predefined Configuration

The DRS predefined configuration described here can be used with either of these switch types:

- an MCSESM103F2CU1 Modicon extended managed switch, which supports multi-mode fiber cable
- an MCSESM103F2CS1 Modicon extended managed switch, which supports single-mode fiber cable

Both switches have two fiber ports and eight copper ports.

With single-mode fiber cable, you can achieve distances on the main ring up to 15 km. With multi-mode fiber cable, you can achieve distances up to 2 km.

You cannot use a redundant pair of DRSs to connect a sub-ring to another sub-ring.

Place the master DRS and slave DRS within 100m of each other, and do not insert devices between them on the main ring or on the sub-ring.

Cable segments longer than 100m are permitted using two BMXNRP0200 / BMSNRP0201 media converters and fiber cable to extend the distance of the following connections between the master DRS and slave DRS:

- the direct link between inner main ring ports 3 (main ring).
- the direct link between inner sub-ring ports 6 (sub-ring).

In this case, extend the cable connection distances using two BMXNRP0200 / BMSNRP0201 media converters as follows:

- copper connection from master switch port to media converter

- fiber connection from media converter to media converter
- copper connection from media converter to slave switch port

Predefined Port Connections

The top fiber port (labeled 1 in the figure below) makes the redundant connection to the fiber cable on the main ring (A). The other fiber port (port 2) is disabled in this predefined configuration; do not connect to this port.

The top left copper port (port 3) makes the redundant connection to the copper cable on the main ring (B). Copper ports 5 and 6 are used for the RIO sub-ring (C) redundant connections. Ports 4, 7, 9, and 10 are used for DIO cloud connections. Port 8 is reserved for port mirroring, page 42, for instance, for monitoring the status of the ports you previously selected in the switch port mirror web page.

NOTE: The default configuration of port 8 has port mirroring disabled.

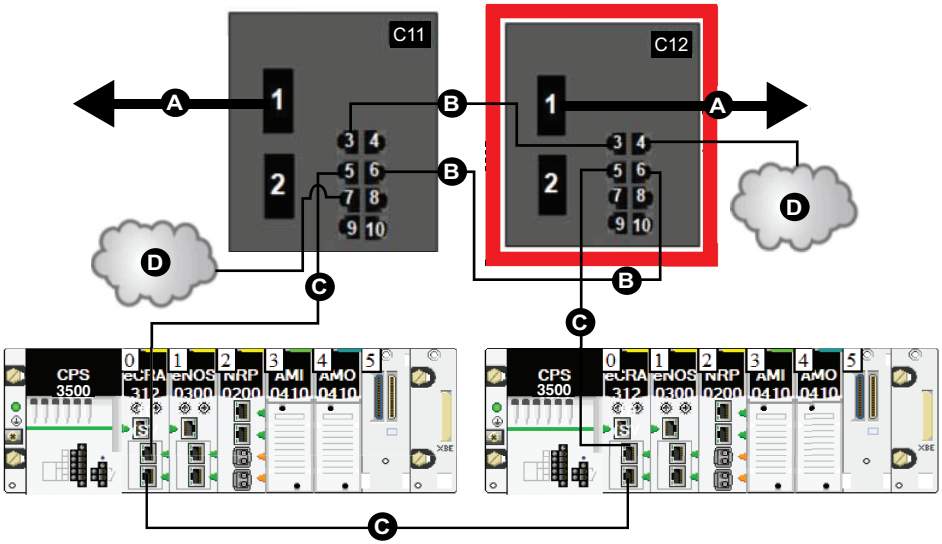

C11 master DRS using a C11 predefined configuration file acting as the master redundant connection between the main ring and the RIO sub-ring

C12 slave DRS using a C12 predefined configuration file acting as the standby redundant connection between the main and the RIO sub-ring

A DRS connection to the fiber portion of the main ring

B DRS connection to each other on the copper portion of the main ring

C DRS connection to the RIO sub-ring

D DRS inner ports (the master and slave DRSs are linked together via ports 3 and 6).

NOTE: Port 1 is linked to the main ring, and port 5 is linked to the sub-ring.

E DIO clouds

F RIO drops within an RIO sub-ring

G copper connection between the two RIO drops that complete the RIO sub-ring

This table describes the functionality of the ports in the preceding illustration:

Port	Type	Description
1	FX	Fiber main ring redundant connection
2	FX	Disabled fiber port; do not use
3	100Base-TX	Upper main ring redundant connection
4	100Base-TX	DIO cloud connection

Port	Type	Description
5	100Base-TX	RIO sub-ring redundant connection
6	100Base-TX	RIO sub-ring redundant connection
7	100Base-TX	DIO cloud connection
8	100Base-TX	Port mirroring connection
9	100Base-TX	DIO cloud connection
10	100Base-TX	DIO cloud connection

When you download this DRS predefined configuration file to a switch, the file provides a set of operating parameters that enable the switch to operate with high efficiency in the specified architecture. Except when enabling or disabling ports that are not connected to either a main ring or a sub-ring, do not adjust the configuration parameters or alter the port usage in the predefined configuration file. Changing the configuration parameters or the port assignments can compromise the effectiveness and accuracy of the switch, as well as the performance of the RIO network.

For troubleshooting, you can enable/disable port mirroring and change the selection of the source ports that you want mirrored. Port mirroring is disabled by default. If you enable port mirroring, port 8 is the destination port, and ports 1, 2, 3, 5, and 6 are selected as source ports with TX/RX. For the Modicon switches (not the ConneXium switches), select **Allow Management** for the destination port in order to log in and manage the switch using this port.

⚠ WARNING

UNINTENDED EQUIPMENT OPERATION

- Do not modify any parameter in the DRS predefined configuration file you download to the switch, except enabling or disabling port mirroring on Ethernet ports
- Enable at least one port (preferably port 8) for switch management.

Failure to follow these instructions can result in death, serious injury, or equipment damage.

NOTE: Disable unused ports to help avoid unauthorized connection of devices or cabling errors which can lead to significant errors in communication.

Supporting the Fiber-to-Copper Transition on the Main Ring

RIO modules in the main ring often do not come equipped with fiber connectors. Therefore, some part of the main ring requires copper cable. Typically, 2 DRSs are each configured to support 1 fiber and 1 copper connection to the main ring.

Connect the DRS to the controller in the local rack:

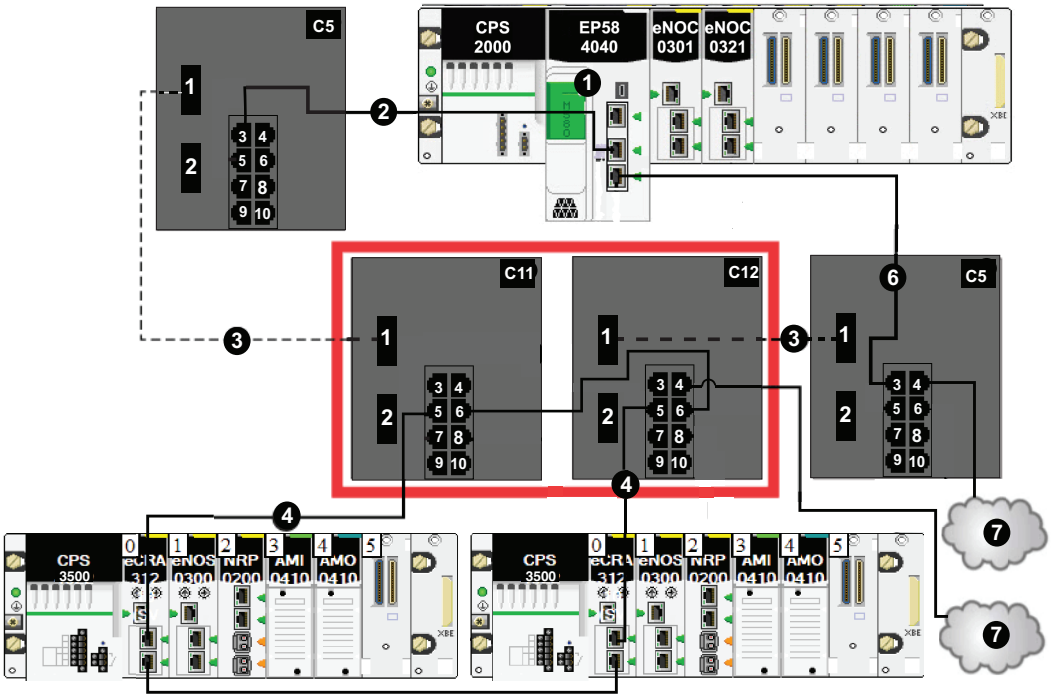

C5 DRS with a C5 predefined configured file that provides copper-to-fiber and fiber-to-copper transitions on the main ring

C11/12 DRS with a C11 or C12 predefined configured file that provides copper-to-fiber and fiber-to-copper transitions on the main ring

A controller with Ethernet I/O scanner service on the local rack

B DRS connected to the local rack on the copper portion of the main ring

C DRSs connected to each other on the fiber portion of the main ring

D RIO drops within an RIO sub-ring

E DRS connection to an RIO drop to connect the RIO sub-ring to the main ring

F connection between two RIO drops to form an RIO sub-ring

G DIO cloud

H connection between two DRSs on the fiber portion of the main ring

NOTE:

- You can also use BMXNRP020• fiber converter modules instead of the two DRSs shown as **C5** in the above illustration.
- A BMENOC0301/BMENOC0311/BMENOC0302(H) module can support distributed equipment through its Ethernet backplane connection to the controller and its device network port(s) on the front panel, respecting the limitation of 128 devices scanned per BMENOC0301/BMENOC0311/BMENOC0302(H) module.

C13: Master Copper/Fiber Main Ring Connections and DIO Sub-ring with DIO Clouds

Predefined Configuration File Name

`C13_Master_RIOMainRingFxTx_DIOSubRingTx_DIOCloudsVx.xx.cli`, where *`Vx.xx`* references the version number of the file.

Use of this Predefined Configuration

With this predefined configuration downloaded, a DRS can be used to make the transition from copper to fiber or from fiber to copper on the main ring. The switch can also support a DIO sub-ring.

With this predefined configuration, use 2 DRSs — one installed with this *master* predefined configuration and the other installed with the corresponding *slave* predefined configuration (C14, page 105) — to provide a redundant connection between the main ring and a DIO sub-ring. The *master* DRS passes data between the main ring and the DIO sub-ring. If the *master* DRS becomes inoperable, the *slave* DRS takes control and passes data between the main ring and the RIO sub-ring.

NOTE: In an *auto configuration*, if the master loses communication, the slave assumes the master role. When the master regains communication or is replaced, it does not resume its master role. The slave continues acting as the master, and the master acts as the standby. The path of port 5 of the slave is set to 200000000 so that the sub-ring inner port does not act as the standby link. Port 5 becomes the standby link for the sub-ring.

NOTE: DRS inner ports are the two ports on the switch that are connected to the main ring. When using two DRS, connect the designated master inner ports to the designated slave inner ports.

- For copper/fiber port master and slave DRS redundant configurations, the inner ports (port 3) connect to each other for the main ring, and port 6 on both DRSs connect to each other for a sub-ring.

If you are using a single DRS but plan to convert to redundant configurations in the future, record these port configurations to reduce the number of any schematic changes required because of the conversion.

NOTE: Each DRS applies a lower priority to distributed equipment, and handles packets from an RIO network before handling packets relating to distributed equipment.

NOTE: Do not mix Modicon DRS (MCSESM) and ConneXium DRS (TCSESM) in a redundant configuration. Confirm that the master and slave DRS joining redundant connections are the same type of device: both are Modicon DRS (MCSESM) or both are ConneXium DRS (TCSESM).

Devices Supported by this Predefined Configuration

Distributed equipment includes an embedded dual-port Ethernet switch and supports the RSTP protocol. (In this manual, Modicon STB islands with STB NIP 2311 network interface modules are used for illustration.)

The predefined configuration described here can be used with either of these DRS types:

- An MCSESM103F2CU1 Modicon extended managed switch, which supports multi-mode fiber cable
- An MCSESM103F2CS1 Modicon extended managed switch, which supports single-mode fiber cable

Both switches have two fiber ports and eight copper ports.

With single-mode fiber cable, you can achieve distances on the main ring up to 15 km. With multi-mode fiber cable, you can achieve distances up to 2 km.

You cannot use a redundant pair of DRSs to connect a sub-ring to another sub-ring.

Place the master DRS and slave DRS within 100m of each other, and do not insert devices between them on the main ring or on the sub-ring.

Cable segments longer than 100m are permitted using two BMXNRP0200 / BMSNRP0201 media converters and fiber cable to extend the distance of the following connections between the master DRS and slave DRS:

- the direct link between inner main ring ports 3 (main ring).
- the direct link between inner sub-ring ports 6 (sub-ring).

In this case, extend the cable connection distances using two BMXNRP0200 / BMSNRP0201 media converters as follows:

- copper connection from master switch port to media converter
- fiber connection from media converter to media converter
- copper connection from media converter to slave switch port

Port Connections

The top fiber port (port 1) makes the redundant connection to the fiber cable on the main ring (A). The other fiber port (port 2) is disabled; do not connect to this port.

The top left copper port (port 3) makes the redundant connection to the copper cable on the main ring (B). Copper ports 5 and 6 are used to connect to the DIO sub-ring (C).

Ports 4, 7, 9, and 10 can be used for other purposes. Port 8 is reserved for port mirroring, page 42, for instance., for monitoring the status of the ports you previously selected in the switch port mirror web page.

NOTE: The default configuration of port 8 has port mirroring disabled.

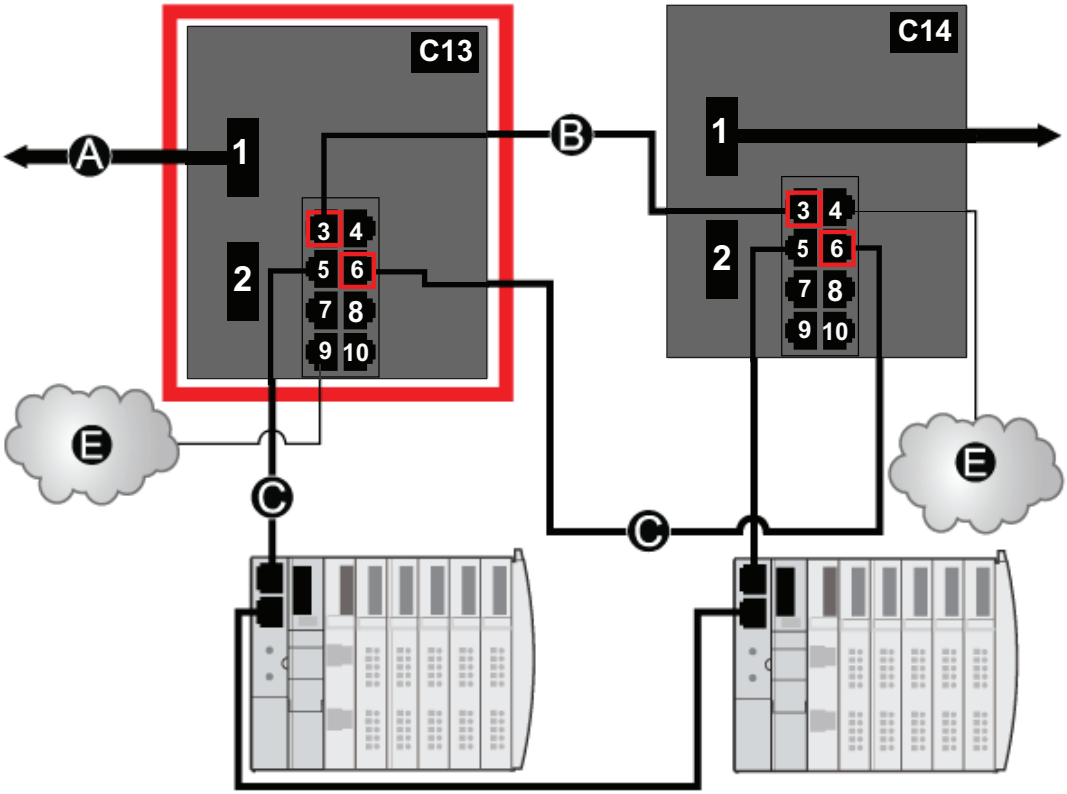

C13 master DRS using a C13 predefined configuration file to act as the master redundant connection between the main ring and the DIO sub-ring.

C14 slave DRS using a C14 predefined configuration file to act as the standby redundant connection between the main ring and the DIO sub-ring.

A DRS connection to the fiber portion of the main ring

B DRS connection to each other on the copper portion of the main ring

C DRS connection to the DIO sub-ring

D DRS inner ports (the master and slave DRSs are linked together through ports 3 and 6.

NOTE: Port 1 is linked to the main ring, and port 5 is linked to the sub-ring.

E DIO clouds

This table describes the functionality of the ports in the above illustration:

Port	Type	Description
1	FX	fiber main ring redundant connection
2	FX	disabled fiber port; do not use
3	100Base-TX	copper main ring redundant connection
4	100Base-TX	DIO cloud connection
5	100Base-TX	DIO sub-ring redundant connection
6	100Base-TX	DIO sub-ring redundant connection
7	100Base-TX	DIO cloud connection
8	100Base-TX	port mirroring connection
9	100Base-TX	DIO cloud connection
10	100Base-TX	DIO cloud connection

When you download this DRS predefined configuration file to a switch, the file provides a set of operating parameters that enable the switch to operate with high efficiency in the specified architecture. Except when enabling or disabling ports that are not connected to either a main ring or a sub-ring, do not adjust the configuration parameters or alter the port usage in the predefined configuration file. Changing the configuration parameters or the port assignments can compromise the effectiveness and accuracy of the switch, as well as the performance of the RIO network.

For troubleshooting, you can enable/disable port mirroring and change the selection of the source ports that you want mirrored. Port mirroring is disabled by default. If you enable port mirroring, port 8 is the destination port, and ports 1, 2, 3, 5, and 6 are selected as source ports with TX/RX. For the Modicon switches (not the ConneXium switches), select **Allow Management** for the destination port in order to log in and manage the switch using this port.

⚠ WARNING

UNINTENDED EQUIPMENT OPERATION

- Do not modify any parameter in the DRS predefined configuration file you download to the switch, except enabling or disabling port mirroring on Ethernet ports
- Enable at least one port (preferably port 8) for switch management.

Failure to follow these instructions can result in death, serious injury, or equipment damage.

NOTE: Disable unused ports to help avoid unauthorized connection of devices or cabling errors which can lead to significant errors in communication.

C14: Slave Copper/Fiber Main Ring Connections and DIO Sub-ring with DIO Clouds

Predefined Configuration File Name

`C14_Slave_RIOMainRingFxTx_DIOSubRingTx_DIOCloudsVx.xx.cli`, where *`Vx.xx`* references the version number of the file.

Use of this Predefined Configuration

With this predefined configuration downloaded, a DRS can be used to make the transition from copper to fiber or from fiber to copper on the main ring. The switch can also support a DIO sub-ring.

With this predefined configuration, use 2 DRSs — one installed with this *slave* predefined configuration and the other installed with the corresponding *master* predefined configuration (C13, page 100) — to provide a redundant connection between the main ring and a DIO sub-ring. The *master* DRS passes data between the main ring and the DIO sub-ring. If the *master* DRS becomes inoperable, the *slave* DRS takes control and passes data between the main ring and the RIO sub-ring.

NOTE: In an *auto configuration*, if the master loses communication, the slave assumes the master role. When the master regains communication or is replaced, it does not resume its master role. The slave continues acting as the master, and the master acts as the standby. The path of port 5 of the slave is set to 200000000 so that the sub-ring inner port does not act as the standby link. Port 5 becomes the standby link for the sub-ring.

NOTE: DRS inner ports are the two ports on the switch that are connected to the main ring. When using two DRS, connect the designated master inner ports to the designated slave inner ports.

- For copper/fiber port master and slave DRS redundant configurations, the inner ports (port 3) connect to each other for the main ring, and port 6 on both DRSs connect to each other for a sub-ring.

If you are using a single DRS but plan to convert to redundant configurations in the future, record these port configurations to reduce the number of any schematic changes required because of the conversion.

NOTE: Each DRS applies a lower priority to distributed equipment, and handles packets from an RIO network before handling packets relating to distributed equipment.

NOTE: Do not mix Modicon DRS (MCSESM) and ConneXium DRS (TCSESM) in a redundant configuration. Confirm that the master and slave DRS joining redundant connections are the same type of device: both are Modicon DRS (MCSESM) or both are ConneXium DRS (TCSESM).

Devices Supported by this Predefined Configuration

Distributed equipment includes an embedded dual-port Ethernet switch and supports the RSTP protocol. (In this manual, Modicon STB islands with STB NIP 2311 network interface modules are used for illustration.)

The predefined configuration described here can be used with either of these DRS types:

- An MCSESM103F2CU1 Modicon extended managed switch, which supports multi-mode fiber cable
- An MCSESM103F2CS1 Modicon extended managed switch, which supports single-mode fiber cable

Both switches have two fiber ports and eight copper ports.

With single-mode fiber cable, you can achieve distances on the main ring up to 15 km. With multi-mode fiber cable, you can achieve distances up to 2 km.

You cannot use a redundant pair of DRSs to connect a sub-ring to another sub-ring.

Place the master DRS and slave DRS within 100m of each other, and do not insert devices between them on the main ring or on the sub-ring.

Cable segments longer than 100m are permitted using two BMXNRP0200 / BMSNRP0201 media converters and fiber cable to extend the distance of the following connections between the master DRS and slave DRS:

- the direct link between inner main ring ports 3 (main ring).
- the direct link between inner sub-ring ports 6 (sub-ring).

In this case, extend the cable connection distances using two BMXNRP0200 / BMSNRP0201 media converters as follows:

- copper connection from master switch port to media converter
- fiber connection from media converter to media converter
- copper connection from media converter to slave switch port

Port Connections

The top fiber port (port 1) makes the redundant connection to the fiber cable on the main ring (A). The other fiber port (port 2) is disabled; do not connect to this port.

The top left copper port (port 3) makes the redundant connection to the copper cable on the main ring (B). Copper ports 5 and 6 are used to connect to the DIO sub-ring (C).

Ports 4, 7, 9, and 10 can be used for other purposes. Port 8 is reserved for port mirroring, page 42, for instance., for monitoring the status of the ports you previously selected in the switch port mirror web page.

NOTE: The default configuration of port 8 has port mirroring disabled.

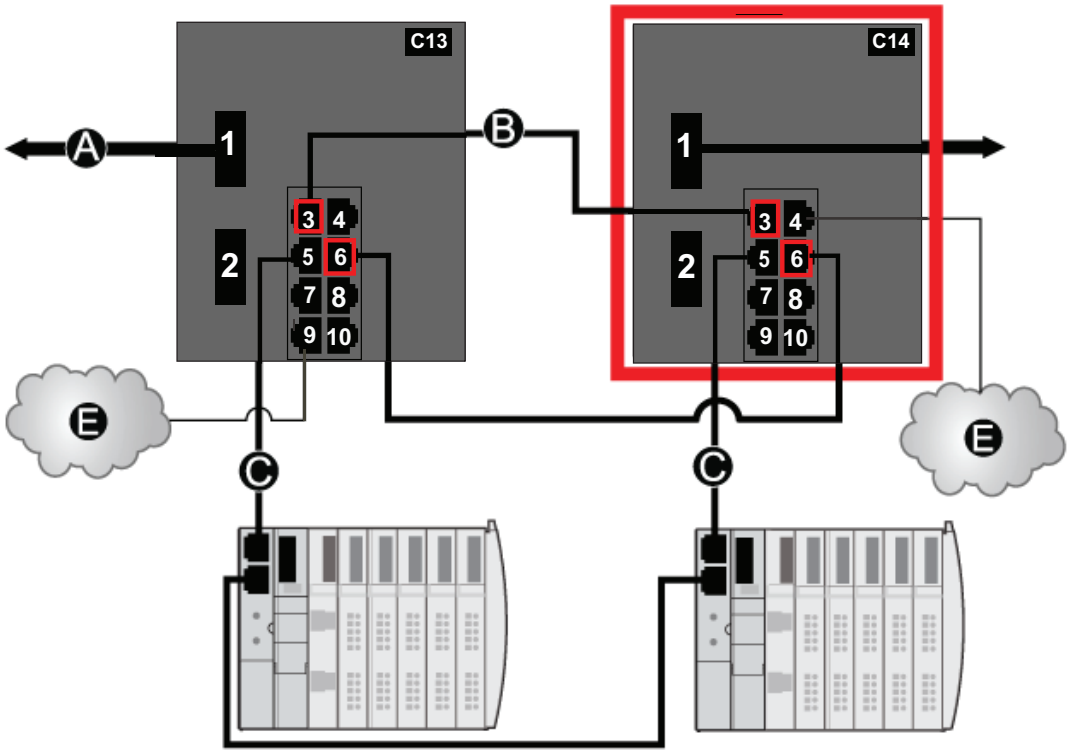

C13 master DRS using a C13 predefined configuration file to act as the master redundant connection between the main ring and the DIO sub-ring.

C14 slave DRS using a C14 predefined configuration file to act as the master redundant connection between the main ring and the DIO sub-ring.

A Port 1 on the DRS is connected to the fiber portion of the main ring.

B The DRSs are connected on the copper portion of the main ring through port 3.

C The DRSs are connected to the DIO sub-ring through port 6.

D DRS inner ports (the master and slave DRSs are linked together through ports 3 and 6.

NOTE: Ports 1 are linked to the main ring, and ports 6 are linked to the sub-ring.

E DIO clouds

This table describes the functionality of the ports in the above illustration:

Port	Type	Description
1	FX	fiber main ring redundant connection

2	FX	disabled fiber port; do not use
3	100Base-TX	100Base-TX
4	100Base-TX	DIO cloud connection
5	100Base-TX	DIO sub-ring redundant connection
6	100Base-TX	DIO sub-ring redundant connection
7	100Base-TX	DIO cloud connection
8	100Base-TX	port mirroring connection
9	100Base-TX	DIO cloud connection
10	100Base-TX	DIO cloud connection

When you download this DRS predefined configuration file to a switch, the file provides a set of operating parameters that enable the switch to operate with high efficiency in the specified architecture. Except when enabling or disabling ports that are not connected to either a main ring or a sub-ring, do not adjust the configuration parameters or alter the port usage in the predefined configuration file. Changing the configuration parameters or the port assignments can compromise the effectiveness and accuracy of the switch, as well as the performance of the RIO network.

For troubleshooting, you can enable/disable port mirroring and change the selection of the source ports that you want mirrored. Port mirroring is disabled by default. If you enable port mirroring, port 8 is the destination port, and ports 1, 2, 3, 5, and 6 are selected as source ports with TX/RX. For the Modicon switches (not the ConneXium switches), select **Allow Management** for the destination port in order to log in and manage the switch using this port.

⚠ WARNING

UNINTENDED EQUIPMENT OPERATION

- Do not modify any parameter in the DRS predefined configuration file you download to the switch, except enabling or disabling port mirroring on Ethernet ports
- Enable at least one port (preferably port 8) for switch management.

Failure to follow these instructions can result in death, serious injury, or equipment damage.

NOTE: Disable unused ports to help avoid unauthorized connection of devices or cabling errors which can lead to significant errors in communication.

C15: Copper/Fiber Connection for a Long-haul Hot Standby Link

Predefined Configuration File Name

`C15_CRPLinkHotStandbyLDVx.xx.cli`, where *`Vx.xx`* references the version number of the file.

Use of this Predefined Configuration

In some Hot Standby applications, you may want to separate the primary controller from the standby controller by a long distance. In a tunnel application, for example, you may want to install the two controllers at opposite ends of the tunnel to lessen the likelihood that external events happening to one affects the other.

A fiber-optic link connects the controllers in each local rack. As the controllers do not have fiber ports, the initial connections are made with copper cable. Two dual-ring switches (DRSs), each with this predefined configuration downloaded, are used to transition from copper to fiber then from fiber to copper.

Devices Supported by this Predefined Configuration

The C15 file supports the MCSESM103F2CU1 and MCSESM103F2CS1 Modicon extended DRSs. Each DRS has eight ports that support copper connections and two ports that support fiber-optic connections. Choose a DRS according to the fiber cable distances in your hardware configuration:

Dual-Ring Switch	Fiber Ports	Mode	Distance
MCSESM103F2CU1	2	multi-mode	2 km
MCSESM103F2CS1	2	single-mode	15 km

Predefined Configuration Port Connections

This is a graphical view of the supported connections:

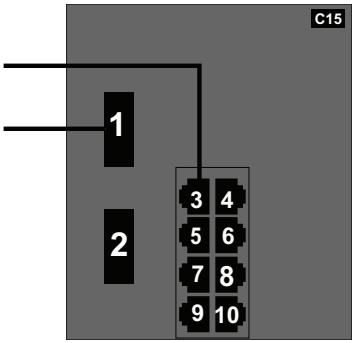

These connections are available when you use the C15 file:

Port	Type	Description
1	FX	fiber connection to the main ring
2	FX	disabled fiber port; do not use
3	100Base-TX	copper connection to the main ring
4	100Base-TX	disabled copper port; do not use
5	100Base-TX	disabled copper port; do not use
6	100Base-TX	disabled copper port; do not use
7	100Base-TX	disabled copper port; do not use
8	100Base-TX	port mirroring connection (disabled by default)
9	100Base-TX	disabled, not used
10	100Base-TX	disabled, not used

NOTE: This predefined configuration does not support the use of a sub-ring or any distributed I/O clouds.

When you download this DRS predefined configuration file to a switch, the file provides a set of operating parameters that enable the switch to operate with high efficiency in the specified architecture. Except when enabling or disabling ports that are not connected to either a main ring or a sub-ring, do not adjust the configuration parameters or alter the port usage in the predefined configuration file. Changing the configuration parameters or the port assignments can compromise the effectiveness and accuracy of the switch, as well as the performance of the RIO network.

For troubleshooting, you can enable/disable port mirroring and change the selection of the source ports that you want mirrored. Port mirroring is disabled by default. If you enable port mirroring, port 8 is the destination port, and ports 1, 2, 3, 5, and 6 are selected as source ports with TX/RX. For the Modicon switches (not the ConneXium switches), select **Allow Management** for the destination port in order to log in and manage the switch using this port.

⚠ WARNING

UNINTENDED EQUIPMENT OPERATION

- Do not modify any parameter in the DRS predefined configuration file you download to the switch, except enabling or disabling port mirroring on Ethernet ports
- Enable at least one port (preferably port 8) for switch management.

Failure to follow these instructions can result in death, serious injury, or equipment damage.

NOTE: Disable unused ports to help avoid unauthorized connection of devices or cabling errors which can lead to significant errors in communication.

A Long-haul Hot Standby Link

This sample network includes a primary local rack and a secondary Hot Standby rack. Multiple RIO drops are connected to the main ring. Two copper-to-fiber DRSs provide a long-haul fiber connection that supports the Hot Standby functionality:

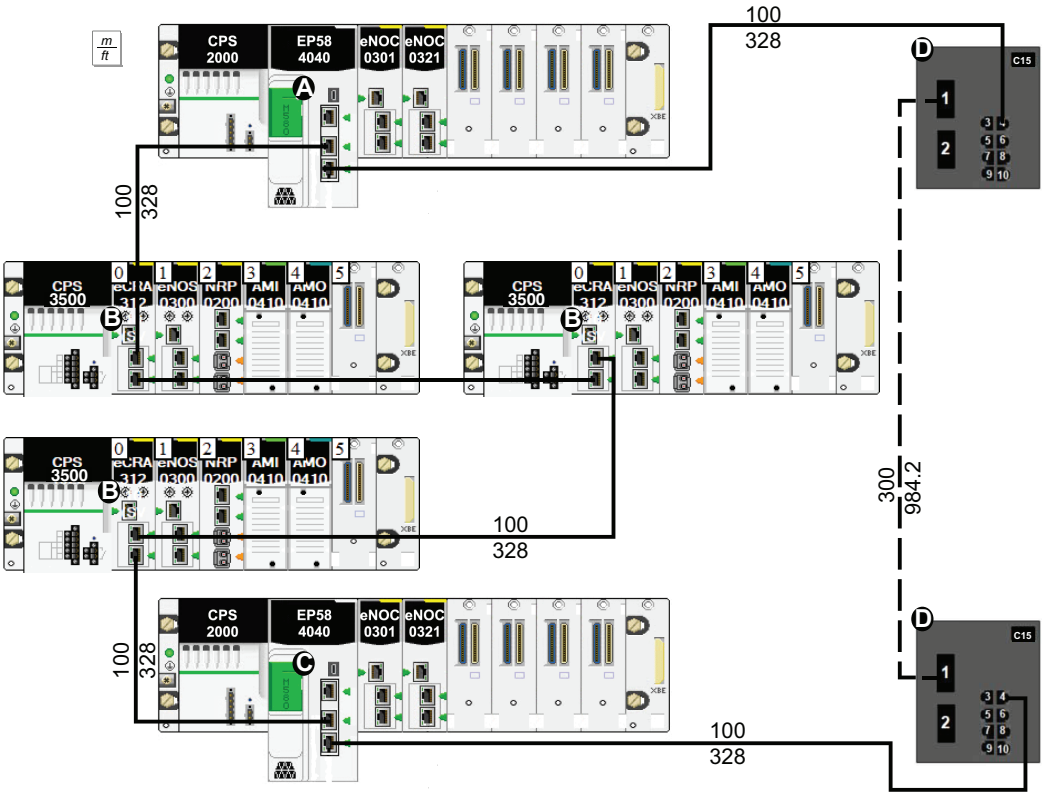

1 The controller in the primary rack is connected to (e)X80 EIO adapter modules.

2 RIO drops are connected to the main ring through BM•CRA312•0 (e)X80 EIO adapter modules.

3 The controller in the standby rack is connected to (e)X80 EIO adapter modules.

4 DRSs are configured for long-haul Hot Standby support and connected by a fiber cable greater than 100 m long.

C16: Copper RIO Main Ring and Fiber RIO Sub-ring with DIO Clouds

Predefined Configuration File Name

Use predefined configuration file C16 to extend distances on a remote I/O sub-ring in the network.

The name of this file is:

`C16_RIOMainRingTx_RIOSubRingFx_DIOCloudsTxVx.x.cli` where *`Vx.x`* references the version number of the file.

Use of this Predefined Configuration

In some applications, long distances (up to 15 km) may exist between a DRS (dual-ring switch) in an M580 EIO network and the devices in a remote I/O sub-ring. You can span these distances using single-mode or multi-mode fiber-optic cable.

Use the C16 configuration under these conditions:

- Fiber cable connects the DRS to a remote I/O sub-ring.
- Copper cable connects the DRS to the main ring.

Devices Supported by this Predefined Configuration

The C16 file supports the MCSESM103F2CU1 and MCSESM103F2CS1 Modicon extended DRSs. Each DRS has eight ports that support copper connections and two ports that support fiber optic connections. Choose a DRS according to the fiber cable distances in your hardware configuration:

Dual Ring Switch	Fiber Ports	Mode	Distance
MCSESM103F2CU1	2	multi-mode	2 km
MCSESM103F2CS1	2	single-mode	15 km

Predefined Port Connections

This is a graphical view of the supported connections:

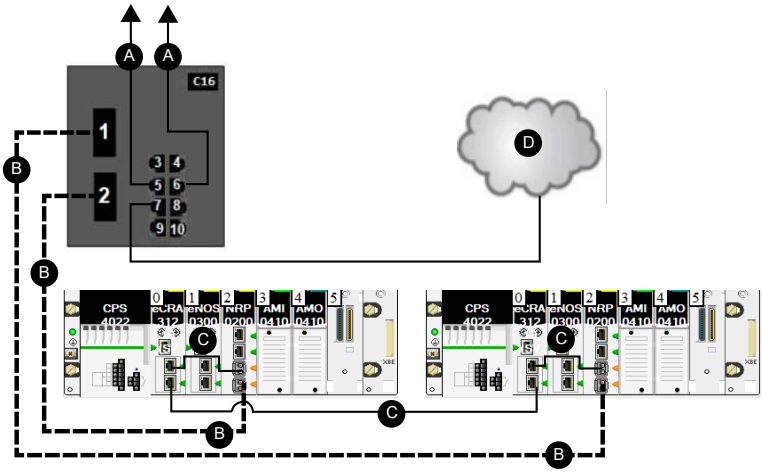

C16 This DRS uses a C16 predefined configuration file to act as the primary redundant connection between the copper RIO main ring and the fiber RIO sub-ring.

A DRS connection to the copper main ring

B fiber portion of the RIO sub-ring

C copper portion of the RIO sub-ring

D DIO cloud

Port 8 is reserved for mirroring.

These connections are available when you use the C16 file:

Port	Type	Description
1	FX	fiber connection to a remote I/O sub-ring
2	FX	fiber connection to a remote I/O sub-ring
3	100Base-TX	disabled copper port; do not use
4	100Base-TX	DIO cloud connection
5	100Base-TX	copper connection to the main ring
6	100Base-TX	copper connection to the main ring
7	100Base-TX	DIO cloud connection
8	100Base-TX	port mirroring
9	100Base-TX	DIO cloud connection
10	100Base-TX	DIO cloud connection

When you download this DRS predefined configuration file to a switch, the file provides a set of operating parameters that enable the switch to operate with high efficiency in the specified architecture. Except when enabling or disabling ports that are not connected to either a main ring or a sub-ring, do not adjust the configuration parameters or alter the port usage in the predefined configuration file. Changing the configuration parameters or the port assignments can compromise the effectiveness and accuracy of the switch, as well as the performance of the RIO network.

For troubleshooting, you can enable/disable port mirroring and change the selection of the source ports that you want mirrored. Port mirroring is disabled by default. If you enable port mirroring, port 8 is the destination port, and ports 1, 2, 3, 5, and 6 are selected as source ports with TX/RX. For the Modicon switches (not the ConneXium switches), select **Allow Management** for the destination port in order to log in and manage the switch using this port.

⚠ WARNING

UNINTENDED EQUIPMENT OPERATION

- Do not modify any parameter in the DRS predefined configuration file you download to the switch, except enabling or disabling port mirroring on Ethernet ports
- Enable at least one port (preferably port 8) for switch management.

Failure to follow these instructions can result in death, serious injury, or equipment damage.

NOTE: Disable unused ports to help avoid unauthorized connection of devices or cabling errors which can lead to significant errors in communication.

C17: Master Fiber RIO Main Ring and Copper RIO Sub-ring with DIO Clouds

Predefined Configuration File Name

The name of this file is:

`C17_Master_RIOMainRingFx_RIOSubRingTx_DIOCloudsVx.x.cfg` where *`Vx.x`* references the version number of the file.

Use of this Predefined Configuration

Use the C17 configuration profile for a DRS along with a second DRS using the C18 configuration file in a master/slave DRS design. The C17 configuration profile designates the master switch.

C17 network connections:

- Fiber port 1 connects the DRS to the main ring.
- Fiber port 2 serves as the first of two redundant ring connections between the two switches.
- Copper port 5 connects the DRS to the drops of its respective sub-ring.
- Copper port 6 connects each DRS to the NRP module in the first local drop forming the second redundant ring connection between the two switches to span the extended distance.

NOTE: In an *auto configuration*, if the master loses communication, the slave assumes the master role. When the master regains communication or is replaced, it does not resume its master role. The slave continues acting as the master, and the master acts as the standby. The path of port 5 of the slave is set to 200000000 so that the sub-ring inner port does not act as the standby link. Port 5 becomes the standby link for the sub-ring.

NOTE: DRS **inner ports** are the two ports on the switch that connect master ring ports to corresponding slave ring ports. When using two DRSs, master inner main ring ports connect to slave inner main ring ports. Likewise, master inner sub-ring ports connect to slave inner sub-ring ports.

- For copper/fiber port master and slave DRS redundant configurations, the inner ports (port 2) connect to each other for the main ring, and port 6 on both DRSs connect to each other for a sub-ring.

If you are using a single DRS but plan to convert to redundant configurations in the future, record these port configurations to reduce the number of any schematic changes required because of the conversion.

NOTE: Each DRS applies a lower priority to distributed equipment and handles packets from an RIO network before handling packets relating to distributed equipment.

NOTE: Do not mix Modicon DRS (MCSESM) and ConneXium DRS (TCSESM) in a redundant configuration. Confirm that the master and slave DRS joining redundant connections are the same type of device: both are Modicon DRS (MCSESM) or both are ConneXium DRS (TCSESM).

Devices Supported by this Predefined Configuration

The C17 file supports the MCSESM103F2CU1 and MCSESM103F2CS1 Modicon extended DRSs. Each DRS has six ports that support copper connections and two ports that support fiber optic connections. Choose a DRS according to the fiber cable distances in your hardware configuration:

Dual Ring Switch	Fiber Ports	Mode	Distance
MCSESM103F2CU1	2	multi-mode	2 km
MCSESM103F2CS1	2	single-mode	15 km

Predefined Port Connections

A graphical view of the supported connections:

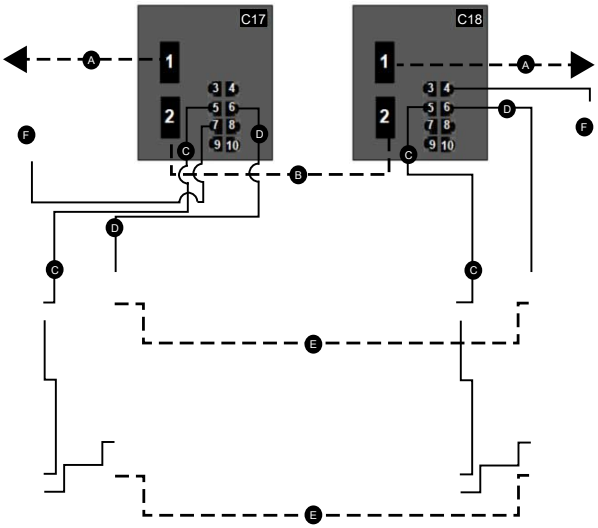

C17 master DRS using a C17 predefined configuration file to act as the master redundant connection between the main ring and the RIO sub-ring.

C18 slave DRS using a C18 predefined configuration file to act as the standby redundant connection between the main ring and the RIO sub-ring.

A DRS connection to the fiber portion of the main ring

B DRS redundant connection to the fiber portion of the main ring

C DRS connection to the RIO sub-ring using copper cable

D DRS connection to the NRP module on the RIO sub-ring to convert copper cable to fiber

E Fiber portion of the RIO sub-ring

F DIO cloud

These connections are available when you use the C17 file:

Port	Type	Description
1	FX	fiber main ring connection
2	FX	fiber redundant connection between the switches
3	100Base-TX	copper port available for connection to a distributed I/O cloud
4	100Base-TX	copper connection to a distributed I/O cloud
5	100Base-TX	copper connections to the drops on the RIO sub-ring
6	100Base-TX	copper connections to the drops on the RIO sub-ring
7	100Base-TX	copper connection to a distributed I/O cloud
8	100Base-TX	port mirroring connection, page 42 (disabled by default)
9	100Base-TX	copper connections to the drops on the RIO sub-ring
10	100Base-TX	copper connections to the drops on the RIO sub-ring

When you download this DRS predefined configuration file to a switch, the file provides a set of operating parameters that enable the switch to operate with high efficiency in the specified architecture. Except when enabling or disabling ports that are not connected to either a main ring or a sub-ring, do not adjust the configuration parameters or alter the port usage in the predefined configuration file. Changing the configuration parameters or the port assignments can compromise the effectiveness and accuracy of the switch, as well as the performance of the RIO network.

For troubleshooting, you can enable/disable port mirroring and change the selection of the source ports that you want mirrored. Port mirroring is disabled by default. If you enable port mirroring, port 8 is the destination port, and ports 1, 2, 3, 5, and 6 are selected as source ports with TX/RX. For the Modicon switches (not the ConneXium switches), select **Allow Management** for the destination port in order to log in and manage the switch using this port.

⚠ WARNING

UNINTENDED EQUIPMENT OPERATION

- Do not modify any parameter in the DRS predefined configuration file you download to the switch, except enabling or disabling port mirroring on Ethernet ports
- Enable at least one port (preferably port 8) for switch management.

Failure to follow these instructions can result in death, serious injury, or equipment damage.

NOTE: Disable unused ports to help avoid unauthorized connection of devices or cabling errors which can lead to significant errors in communication.

C18: Slave Fiber RIO Main Ring and Copper RIO Sub-ring with DIO Clouds

Predefined Configuration File Name

The name of this file is:

`C18_Slave_RIOMainRingFx_RIOSubRingTx_DIOCloudsVx.x.cfg` where *`Vx.x`* references the version number of the file.

Use of this Predefined Configuration

Use the C18 configuration profile for a DRS along with a second DRS using the C17 configuration file, in a master/slave DRS design. The C18 configuration profile designates the slave switch.

C18 network connections:

- Fiber port 1 connects the DRS to the main ring.
- Fiber port 2 serves as the first of two redundant ring connections between the two switches.
- Copper port 5 connects the DRS to the drops of its respective sub-ring.
- Copper port 6 connects each DRS to the NRP module in the first local drop forming the second redundant ring connection between the two switches to span the extended distance.

The master DRS passes data between the RIO main ring, the RIO sub-ring, and the DIO cloud. If the master DRS becomes inoperable, the slave DRS takes control and passes data between the devices connected to the RIO main ring.

NOTE: In an *auto configuration*, if the master loses communication, the slave assumes the master role. When the master regains communication or is replaced, it does not resume its master role. The slave continues acting as the master, and the master acts as the standby. The path of port 5 of the slave is set to 200000000 so that the sub-ring inner port does not act as the standby link. Port 5 becomes the standby link for the sub-ring.

NOTE: DRS inner ports are the two ports on the DRS that are connected to the RIO main ring. When using two DRSs, connected the designated master inner ports to the designated slave inner ports.

NOTE: Each DRS applies a lower priority to distributed equipment and handles packets from an RIO network before handling packets relating to distributed equipment.

NOTE: Do not mix Modicon DRS (MCSESM) and ConneXium DRS (TCSESM) in a redundant configuration. Confirm that the master and slave DRS joining redundant connections are the same type of device: both are Modicon DRS (MCSESM) or both are ConneXium DRS (TCSESM).

Devices Supported by this Predefined Configuration

The C18 file supports the MCSESM103F2CU1 and MCSESM103F2CS1 Modicon extended DRSs. Each DRS has eight ports that support copper connections and two ports that support fiber optic connections. Choose a DRS according to the fiber cable distances in your hardware configuration:

Dual Ring Switch	Fiber Ports	Mode	Distance
MCSESM103F2CU1	2	multi-mode	2 km
MCSESM103F2CS1	2	single-mode	15 km

Predefined Port Connections

A graphical view of the supported connections:

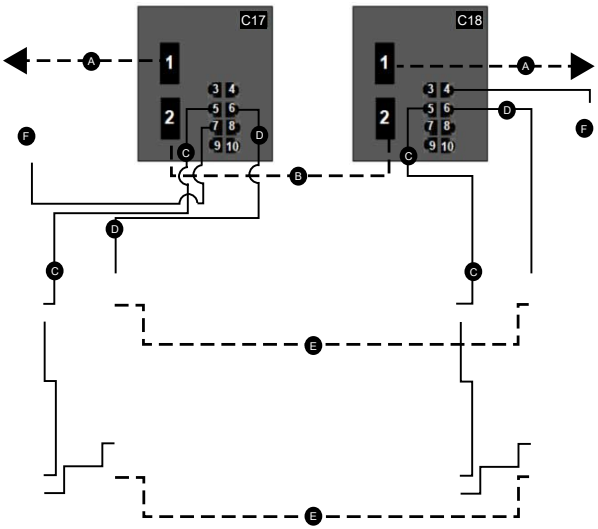

C18 slave DRS using a C18 predefined configuration file to act as the standby redundant connection between the main ring and the RIO sub-ring.

C17 master DRS using a C17 predefined configuration file to act as the master redundant connection between the main ring and the RIO sub-ring.

A DRS connection to the fiber portion of the main ring

B DRS redundant connection to the fiber portion of the main ring

C DRS connection to the RIO sub-ring using copper cable

D DRS connection to the NRP module on the RIO sub-ring to convert copper cable to fiber

E Fiber portion of the RIO sub-ring

F DIO cloud

These connections are available when you use the C18 file:

Port	Type	Description
1	FX	fiber main ring connection
2	FX	fiber redundant connection between the switches
3	100Base-TX	copper port available for connection to a distributed I/O cloud
4	100Base-TX	copper connection to a distributed I/O cloud
5	100Base-TX	copper connections to the drops on the RIO sub-ring
6	100Base-TX	copper connections to the drops on the RIO sub-ring
7	100Base-TX	copper connection to a distributed I/O cloud
8	100Base-TX	port mirroring connection (disabled by default)
9	100Base-TX	copper connection to an RIO sub-ring
10	100Base-TX	copper connection to an RIO sub-ring

When you download this DRS predefined configuration file to a switch, the file provides a set of operating parameters that enable the switch to operate with high efficiency in the specified architecture. Except when enabling or disabling ports that are not connected to either a main ring or a sub-ring, do not adjust the configuration parameters or alter the port usage in the predefined configuration file. Changing the configuration parameters or the port assignments can compromise the effectiveness and accuracy of the switch, as well as the performance of the RIO network.

For troubleshooting, you can enable/disable port mirroring and change the selection of the source ports that you want mirrored. Port mirroring is disabled by default. If you enable port mirroring, port 8 is the destination port, and ports 1, 2, 3, 5, and 6 are selected as source ports with TX/RX. For the Modicon switches (not the ConneXium switches), select **Allow Management** for the destination port in order to log in and manage the switch using this port.

⚠ WARNING

UNINTENDED EQUIPMENT OPERATION

- Do not modify any parameter in the DRS predefined configuration file you download to the switch, except enabling or disabling port mirroring on Ethernet ports
- Enable at least one port (preferably port 8) for switch management.

Failure to follow these instructions can result in death, serious injury, or equipment damage.

NOTE: Disable unused ports to help avoid unauthorized connection of devices or cabling errors which can lead to significant errors in communication.

C19: Master Copper RIO Main Ring and Copper/ Fiber RIO Sub-ring with DIO Clouds

Predefined Configuration File Name

The name of this file is:

`C19_Master_RIOMainRingTx_RIOSubRingFxTx_DIOCloudsVx.xx.cli`, where *`Vx.xx`* references the version number of the file.

Use of this Predefined Configuration

Common uses of this predefined configuration are to transition from a copper cable on the main ring to a fiber ring on the RIO sub-ring. This configuration allows you to transition back from fiber to copper.

Use the C19 configuration profile for a DRS with a second DRS using the C20 configuration file in a master/slave DRS design. The C19 configuration profile designates the master switch.

- Copper port 5 from both switches is used for the main ring outer connection.
- Copper port 6 between both switches is used for the main ring redundant inner connection.
- Fiber port 1 of both switches is used for the sub-ring outer connection.
- Copper port 3 between both switches is used for the sub-ring redundant inner connection.
- BMXNRP020• modules are used to connect between fiber and copper of the BM•CRA312•0 adapter module on the RIO drop.

The master DRS passes data between the RIO main ring, the RIO sub-ring, and the DIO cloud. If the master DRS becomes inoperable, the slave DRS takes control and passes data between the devices connected to the RIO main ring.

NOTE: DRS inner ports are the two ports on the DRS that are connected to the RIO main ring. When using two DRSs, connected the designated master inner ports to the designated slave inner ports.

- For copper port master and slave DRS redundant configurations, the inner ports (port 2) connect to each other for the main ring, and port 6 on both DRSs connect to each other for an RIO sub-ring.
- For copper/fiber port master and slave DRS redundant configurations, the inner ports (port 3) connect to each other for the RIO main ring, and port 6 on both DRSs connect to each other for an RIO sub-ring.

If you are using a single DRS but plan to convert to redundant configurations in the future, record these port configurations to reduce the number of any schematic changes required because of the conversion.

NOTE: Each DRS applies a lower priority to distributed equipment and handles packets from an RIO network before handling packets relating to distributed equipment.

NOTE: Do not mix Modicon DRS (MCSESM) and ConneXium DRS (TCSESM) in a redundant configuration. Confirm that the master and slave DRS joining redundant connections are the same type of device: both are Modicon DRS (MCSESM) or both are ConneXium DRS (TCSESM).

Devices Supported by this Predefined Configuration

The C19 files supports the MCSESM103F2CU1 and MCSESM103F2CS1 Modicon extended DRSs. Each DRS has eight ports that support copper connections and two ports that support fiber optic connections. Choose a DRS according to the fiber cable distances in your hardware configuration:

Dual Ring Switch	Fiber Ports	Mode	Distance
MCSESM103F2CU1	2	multi-mode	2 km
MCSESM103F2CS1	2	single-mode	15 km

Predefined Port Connections

A graphical view of the supported connections:

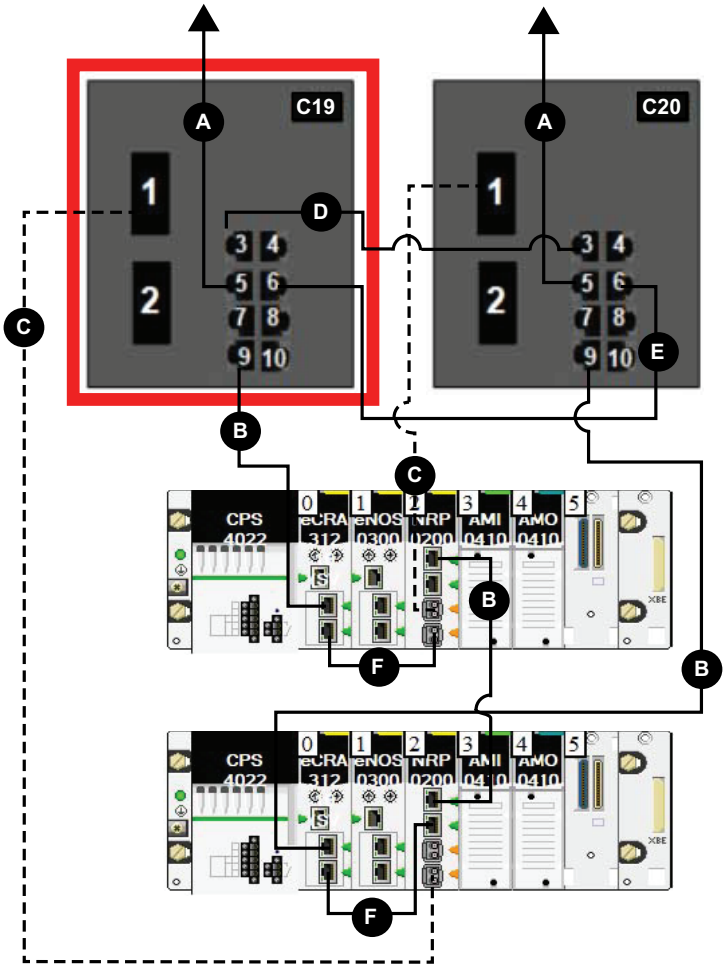

A DRS connection to the copper portion of the RIO main ring

B DRS connection to the copper portion of the RIO sub-ring

C DRS connection to the fiber portion of the RIO main ring

D DRS connection between the two switches to the redundant inner RIO sub-ring

E DRS connection between the two switches to the redundant inner RIO main ring

F Interlink between the BMXNRP020• modules on the RIO drops to connect fiber and copper

When you download this DRS predefined configuration file to a switch, the file provides a set of operating parameters that enable the switch to operate with high efficiency in the specified architecture. Except when enabling or disabling ports that are not connected to either a main ring or a sub-ring, do not adjust the configuration parameters or alter the port usage in the predefined configuration file. Changing the configuration parameters or the port assignments can compromise the effectiveness and accuracy of the switch, as well as the performance of the RIO network.

For troubleshooting, you can enable/disable port mirroring and change the selection of the source ports that you want mirrored. Port mirroring is disabled by default. If you enable port mirroring, port 8 is the destination port, and ports 1, 2, 3, 5, and 6 are selected as source ports with TX/RX. For the Modicon switches (not the ConneXium switches), select **Allow Management** for the destination port in order to log in and manage the switch using this port.

⚠ WARNING

UNINTENDED EQUIPMENT OPERATION

- Do not modify any parameter in the DRS predefined configuration file you download to the switch, except enabling or disabling port mirroring on Ethernet ports
- Enable at least one port (preferably port 8) for switch management.

Failure to follow these instructions can result in death, serious injury, or equipment damage.

NOTE: Disable unused ports to help avoid unauthorized connection of devices or cabling errors which can lead to significant errors in communication.

C20: Slave Copper RIO Main Ring and Copper/ Fiber RIO Sub-ring with DIO Clouds

Predefined Configuration File Name

The name of this file is:

`C20_Slave_RIOMainRingTx_RIOSubRingFxTx_DIOCloudsVx.xx.cli`, where *Vx.xx* references the version number of the file.

Use of this Predefined Configuration

Common uses of this predefined configuration are to transition from a copper cable on the main ring to a fiber ring on the RIO sub-ring. This configuration allows you to transition back from fiber to copper.

Use the C20 configuration profile for a DRS with a second DRS using the C19 configuration file in a master/slave DRS design. The C20 configuration profile designates the slave switch.

- Copper port 5 from both switches is used for the main ring outer connection.
- Copper port 6 between both switches is used for the main ring redundant inner connection.
- Fiber port 1 of both switches is used for the sub-ring outer connection.
- Copper port 3 between both switches is used for the sub-ring redundant inner connection.
- BMXNRP020• modules are used to connect between fiber and copper of the BM•CRA312•0 adapter module on the RIO drop.

The master DRS passes data between the RIO main ring, the RIO sub-ring, and the DIO cloud. If the master DRS becomes inoperable, the slave DRS takes control and passes data between the devices connected to the RIO main ring.

NOTE: DRS inner ports are the two ports on the DRS that are connected to the RIO main ring. When using two DRSs, connected the designated master inner ports to the designated slave inner ports.

- For copper port master and slave DRS redundant configurations, the inner ports (port 2) connect to each other for the main ring, and port 6 on both DRSs connect to each other for an RIO sub-ring.
- For copper/fiber port master and slave DRS redundant configurations, the inner ports (port 3) connect to each other for the RIO main ring, and port 6 on both DRSs connect to each other for an RIO sub-ring.

If you are using a single DRS but plan to convert to redundant configurations in the future, record these port configurations to reduce the number of any schematic changes required because of the conversion.

NOTE: Each DRS applies a lower priority to distributed equipment and handles packets from an RIO network before handling packets relating to distributed equipment.

NOTE: Do not mix Modicon DRS (MCSESM) and ConneXium DRS (TCSESM) in a redundant configuration. Confirm that the master and slave DRS joining redundant connections are the same type of device: both are Modicon DRS (MCSESM) or both are ConneXium DRS (TCSESM).

Devices Supported by this Predefined Configuration

The C20 files supports the MCSESM103F2CU1 and MCSESM103F2CS1 Modicon extended DRSs. Each DRS has eight ports that support copper connections and two ports that support fiber optic connections. Choose a DRS according to the fiber cable distances in your hardware configuration:

Dual Ring Switch	Fiber Ports	Mode	Distance
MCSESM103F2CU1	2	multi-mode	2 km
MCSESM103F2CS1	2	single-mode	15 km

Predefined Port Connections

A graphical view of the supported connections:

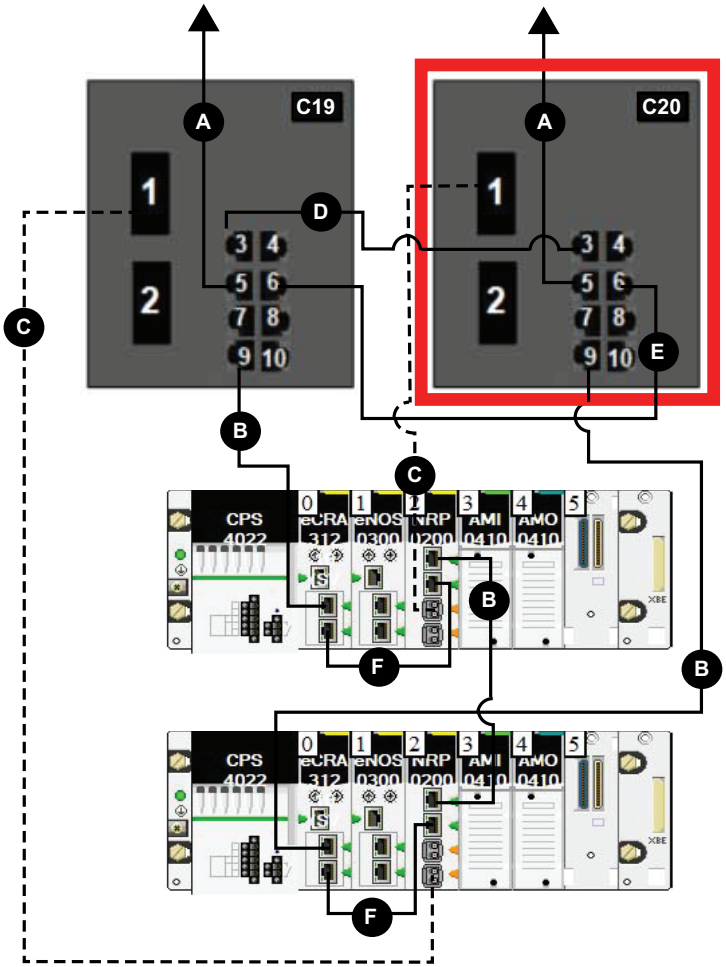

A DRS connection to the copper portion of the RIO main ring

B DRS connection to the copper portion of the RIO sub-ring

C DRS connection to the fiber portion of the RIO main ring

D DRS connection between the two switches to the redundant inner RIO sub-ring

E DRS connection between the two switches to the redundant inner RIO main ring

F Interlink between the BMXNRP020• modules on the RIO drops to connect fiber and copper

When you download this DRS predefined configuration file to a switch, the file provides a set of operating parameters that enable the switch to operate with high efficiency in the specified architecture. Except when enabling or disabling ports that are not connected to either a main ring or a sub-ring, do not adjust the configuration parameters or alter the port usage in the predefined configuration file. Changing the configuration parameters or the port assignments can compromise the effectiveness and accuracy of the switch, as well as the performance of the RIO network.

For troubleshooting, you can enable/disable port mirroring and change the selection of the source ports that you want mirrored. Port mirroring is disabled by default. If you enable port mirroring, port 8 is the destination port, and ports 1, 2, 3, 5, and 6 are selected as source ports with TX/RX. For the Modicon switches (not the ConneXium switches), select **Allow Management** for the destination port in order to log in and manage the switch using this port.

⚠ WARNING

UNINTENDED EQUIPMENT OPERATION

- Do not modify any parameter in the DRS predefined configuration file you download to the switch, except enabling or disabling port mirroring on Ethernet ports
- Enable at least one port (preferably port 8) for switch management.

Failure to follow these instructions can result in death, serious injury, or equipment damage.

NOTE: Disable unused ports to help avoid unauthorized connection of devices or cabling errors which can lead to significant errors in communication.

Obtaining and Installing Predefined Configuration Files

Obtaining Predefined Configuration Files

The predefined configuration files are available on www.se.com.

If you have already installed Control Expert, the predefined configuration files are also located on your PC hard drive (**C: > Users > Public > Documents > Schneider Electric > Control Expert 1•.• > Extras > Config DRS**).

Loading a Predefined Configuration onto a DRS

The process for loading a predefined configuration onto a DRS involves the use of two tools, including:

- the Ethernet switch configuration tool, which you can load on your PC from the Modicon Resource CD that came with your DRS
- a web browser, such as Internet Explorer, that you can use to navigate to the DRS embedded web pages and install the predefined configuration file

Use these steps to load a predefined configuration file on your DRS:

Step	Action
1	Connect your PC to the network that includes the switch or switches you want to configure. Set the IP parameters for your PC.
2	Download the Ethernet Switch Configurator Software tool.
3	Click the appropriate file to start the software installation. . **Result**: The Ethernet switch configuration tool is automatically installed onto your PC. The tool opens. **NOTE:** If the Ethernet switch configuration tool does not automatically open, manually start it by selecting **Start > Programs > Schneider Electric > Modicon > Ethernet Switch Configurator**.

Step	Action
4	On start-up, the tool searches your network for MCSESM DRSs and displays a list of the devices it finds: 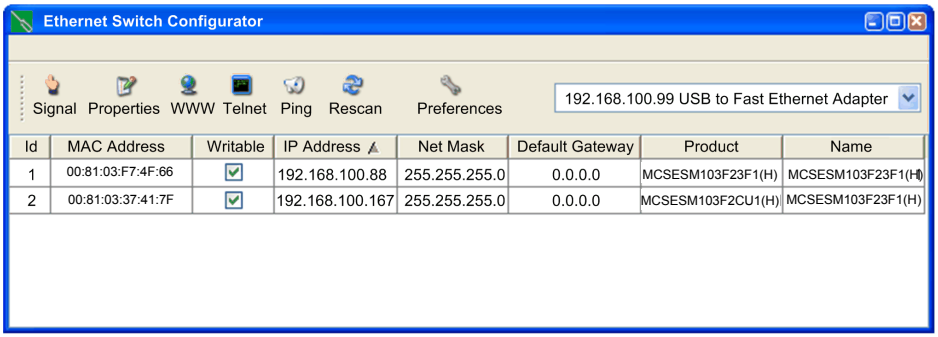
5	To change or assign an IP address to the desired switch (from the list displayed in the previous step), perform one of the following: • Double-click the switch. • Select the switch, and click **Edit > Change Device Properties**. • Select the switch, and click the **Properties** toolbar icon. **Result**: The **Properties** dialog box opens, as shown in the following illustration. Edit the fields as necessary, and press **Ok** to accept your changes. 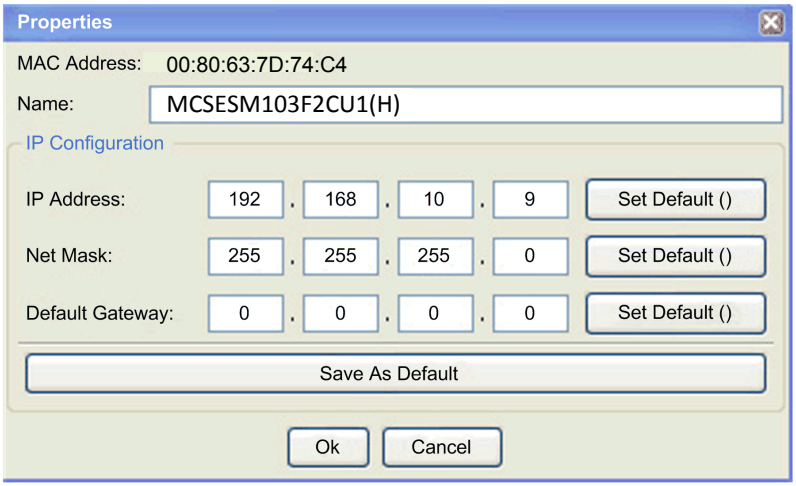
6	Select the switch you want to configure, and click the **WWW** button to open the embedded web pages for the selected switch.

Step	Action
7	Use the tree control on the left side of the web page and select **Basic Settings > Load/Save**: 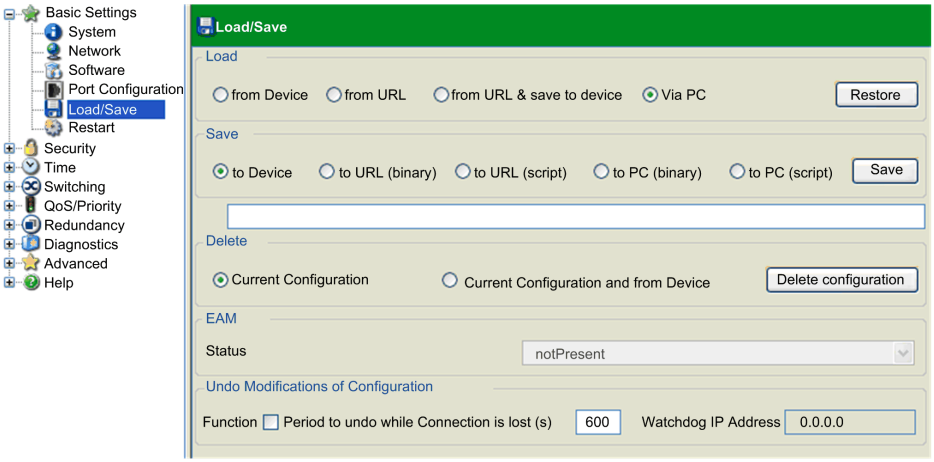
8	In the **Delete** section of the page, select **Current Configuration**, then select **Delete configuration**. **Result**: The existing configuration is deleted from RAM. **NOTE:** Do not select **Current Configuration and from Device** before deleting the configuration. If you do, the configured IP address may be lost, and you may have to restart the process of loading the predefined configuration.
9	In the **Load** section of the page, select **via PC**, then select **Restore**. **Result**: The **Open** dialog box appears.
10	Use the **Open** dialog box to navigate to and select the predefined configuration file you want to load onto the selected DRS, then click **OK**.
11	After a short wait, the message *Configuration updated completed successfully* displays, indicating the predefined configuration file has been loaded onto the DRS. Close this message dialog box. **NOTE:** When you close the dialog box, the icon next to the **Load/Save** node changes to the icon, indicating that the configuration has been written to the DRS RAM, but is not yet stored in flash memory.

Step	Action
12	In the **Save** section of the web page, select **to Device**, then click **Save**. **Result**: This writes your predefined configuration settings to DRS flash memory. **NOTE:** When you click **Save**, the icon next to the **Load/Save** node changes back to the , indicating that the configuration has been stored in flash memory.
13	For your changes to take effect, perform either a cold or a warm restart of the DRS. Do one of the following: • Open the **Basic Settings > Restart** web page. • Click either **Cold start** or **Warm start**. **NOTE:** Refresh the web pages in your browser before viewing the DRS configuration settings.

Performance

What's in This Part

Performance 139
Verifying the Network Connection 145
Application Response Time 149

Performance

What's in This Chapter

System Performance 139
Calculating the Minimum MAST Cycle Time..... 141
System Throughput Considerations 143

Introduction

This chapter discusses system performance considerations, including typical system recovery times, improving system performance, application response time, and communication loss detection times.

System Performance

Memory Consumption

Input and output memory specification:

Scope	Type	Maximum Value per Task*
M580 controller	input bytes per device	up to 32,768, depending on the controller reference
	output bytes per device	up to 24,576, depending on the controller reference
Ethernet RIO	input words per drop	1400
	output words per drop	1400
Ethernet DIO	input bytes per device	up to 1,400, depending on EtherNet/IP or Modbus/Modbus function code.
	output bytes per device	1,400
Total DIO scanning capability	input Kbytes	up to 4, depending on the controller reference
	output Kbytes	up to 4, depending on the controller reference
** You can use all four tasks (MAST, FAST, AUX0, AUX1) simultaneously.*		

Displaying I/O Memory Consumption

You can monitor the I/O memory consumption in Control Expert . Use one of these methods:

- In the **Project Browser**, expand **Project > Configuration > EIO Bus**. Right-click **Properties**.

  — or —

- In the background of the **EIO Bus** window, right-click **Bus properties**.

  — or —

- In the **Edit** menu, select **Bus properties**.

Exceeding RIO Drop Limitations

Control Expert displays an **error** in the log window if one of these events occurs:

- The size of the **RIO drop** memory for the MAST task exceeds 1,400 input bytes or 1,400 output bytes.
- The size of the **RIO drop** memory for the FAST task exceeds 1,400 input bytes or 1,400 output bytes.
- The size of the **RIO drop** memory for the AUX0 task exceeds 1,400 input bytes or 1,400 output bytes.
- The size of the **RIO drop** memory for the AUX1 task exceeds 1,400 input bytes or 1,400 output bytes.
- The size of the M580 network exceeds 80% of the maximum drop limitation for the controller chosen.

Minimum / Maximum System Channels

The minimum and maximum number of channels that an M580 configuration can manage is a function of the *Modicon M580* controller model that you are using. For detailed information on configuring channels, refer to the *M580 Hardware Reference Manual*.

Calculating the Minimum MAST Cycle Time

Introduction

By configuring a sufficiently large MAST cycle time, the controller in your M580 system can process the data processed by the system in a single scan. If the configured MAST cycle time is smaller than the required processing time, the controller MAST will over-run.

By using the formulas (set forth below) to compute a minimum MAST time for your system, you can help avoid a MAST overrun situation.

Calculating a Minimum MAST Cycle

Assuming that only the MAST task is configured, the minimum MAST cycle time (in ms) can be calculated as follows:

- (# of drops using MAST task) / 1.5

The minimum cycle time for other tasks can similarly be estimated:

- *FAST task*: (# of drops using FAST task) / 1.5
- *AUX0 task*: (# of drops using AUX0 task) / 1.5
- *AUX1 task*: (# of drops using AUX1 task) / 1.5

If multiple tasks need to be configured, satisfy the following conditions (where all cycle times are measured in ms):

(# of drops using MAST task) / (MAST cycle time) + (# of drops using FAST task) / (FAST cycle time) + (# of drops using AUX0 task) / (AUX0 cycle time) + (# of drops using AUX1 task) / (AUX1 cycle time) < 1.5

If DIO devices are configured, the minimum cycle time needs to be increased.

NOTE: If you add a BME CXM 0100 module to the rack in Control Expert, you choose either **Remote** or **Distributed**.

- If you choose **Remote** , then the BME CXM 0100 module acts like a drop in the statement (**# of drops using MAST task) / 1.5**) in the way that MAST cycle is affected.
- If you choose **Distributed**, then the BME CXM 0100 module acts like a distributed device in the statement (**If DIO devices are configured, the minimum cycle time needs to be increased.**)

Unlike an actual drop, the BME CXM 0100 module can be mapped only to the MAST task.

Example

In this example, the configuration consists of:

- a local rack with a controller with Ethernet I/O scanner service, using only MAST task
- 10 RIO drops

The minimum MAST cycle time equals:

10 / 1.5 = 6.7 ms

System Throughput Considerations

Introduction

System throughput describes the quantity of data in bytes that the controller can process in a single scan. Design your M580 system so that the controller can scan the data produced by the system in a single scan. If the quantity of data produced by the system is excessive, and scan time is configured to be:

- periodic: There is a data overrun. (Not all data is included in a single scan.)
- cyclic: The time required by the controller to complete the scan may be undesirably long.

This topic presents throughput data for devices on an RIO local rack, which you can use to calculate the throughput of your own application.

Local Rack Throughput Device Capacities

This table shows the maximum number of devices per local rack:

Device	Maximum per Rack
M580 controller with Ethernet I/O scanner service	1
BMENOC0301/BMENOC0311 Ethernet communication module	4(1)
BMENOC0302(H) high performance Ethernet communication module	6
BMENOS0300 network option switch module	4(1)
BMENOC0321 control network module	2
BMXNOR0200 Ethernet communication module	8(2)
BMENOR2200H advanced RTU module	4(1)(2)

(1) A local rack contains an M580 controller with Ethernet I/O scanner service and a maximum of six communication modules, depending upon the controller you choose (see *Modicon M580 Frequently Used Architectures, System Guide*). (A maximum of two of these communication modules can be BMENOC0321 modules.)

While the M580 controllers and BMENOC0301/BMENOC0311 modules are designed specifically for a M580 system, you can use BMXEIA0100, BMXNOR0200, and BMXNOM0200 modules.

For the number of devices per rack supported by BME•585040 and BME•586040 controllers, refer to the controller selection table (see *Modicon M580 Frequently Used Architectures, System Guide*).

(2) Not supported in local racks in M580 Hot Standby systems.

Each controller with Ethernet I/O scanner service can contribute the following maximum capacity:

Data Type	Maximum Capacity
input data	24,000 bytes
output data	24,000 bytes
explicit exchange function block data	up to 8,192 bytes (8 blocks, each with 1,024 bytes), depending on the controller reference

Each controller with DIO scanner service can contribute the following maximum capacity:

Data Type	Maximum Capacity
input data	up to 4,000 bytes, depending on the controller reference
output data	4,000 bytes
explicit exchange function block data	6,144 bytes (6 explicit exchange function blocks, 1,024 bytes per block)

Sample Architecture

For example, a local rack could include a controller with Ethernet I/O scanner service managing an RIO network with 10 drops and only one MAST task, and a DIO network with 20 distributed devices.

In this example, the I/O exchange requires 15 ms on each scan. Determine a controller scan time that is compatible with this processing time.

Verifying the Network Connection

What's in This Chapter

Using the Ethernet Network Manager 145

Using the Ethernet Network Manager

Introduction

In Control Expert, click **Tools > Ethernet Network Manager** to visualize and verify a complex network configuration. The tool can:

- provide a global view of your network
- edit IP addresses and device identifiers for (e)X80 EIO adapter modules

Use either method to access the **Ethernet Network Manager**:

- Select **Tools > Ethernet Network Manager**.
- Select **Ethernet Network Manager** in the **Project Browser**.

NOTE: The **Ethernet Network Manager** tool is available on all M580 controllers. Only devices enabled in the address server (DHCP) are available.

Network Topology Configuration

The **Ethernet Network Manager** tool provides a snapshot of IP address settings for devices included in network topologies that are part of your application. If the tool detects an addressing error, it displays the detected error with a red background. If the tool detects an error, you can re-configure the affected setting in Control Expert.

Parameters in the **Ethernet Network Manager**:

Parameter	Description
Name	Ethernet communication device name
Type	The device type: • Scanner • Module

Parameter	Description
Subtype	The device sub-type: • RIO/DIO • CRA
Profiles	The kind of control network communications: • Remote (RIO) • Distributed (DIO)
Topo address	The topological address of the device, in the sequence: bus, drop, rack, slot.
DHCP Enable	Indicates if the device is a DHCP client and receives its IP address(es) from a DHCP server (yes/no).
IP Address	The IP address, or addresses, assigned to the device. **NOTE:** Editable for scanned modules.
Subnet Mask	The subnet mask related to each assigned IP address.
Gateway Address	The IP address of the default gateway, to which messages for other networks are transmitted.
Identified By	For scanned devices, the type of network identifier.
Identifier	The string used to identify a scanned device. The default value is the device Name. **NOTE:** Editable for scanned modules.
SNMP	For scanning devices, the IP address of up to two SNMP network manager devices.
NTP State	The state of the NTP client: • Enabled • Disabled
NTP Configuration	The IP addresses of up to two NTP servers that send updates to the NTP client resident in the device.

NOTE:

- The red cells indicate detected errors (defined by network management rules).
- After editing a scanned module **IP Address** or **Identifier** setting, click the **Validate** button to save your edits.

Verifying a Hot Standby Network

Follow these steps to use the **Ethernet Network Manager** tool while building your network in Control Expert:

Step	Action
1	In Control Expert, click **Tools** > **Ethernet Network Manager**. **Result:** A preliminary, read-only global view of your network is displayed.
2	Verify the settings with a red background, indicating the tool has detected a configuration error.
3	Click **OK** to close the **Network Inspector** tool.
4	If the tool displayed a detected error: • in a scanning device, go to the specific device editor and change the IP configuration settings. • in a scanned device, you can edit the **IP address** and **Identifier** settings in the **Ethernet Network Manager**, or go to the specific device editor and change the IP configuration settings. When you finish your edits, run the **Ethernet Network Manager** again.
5	Add distributed equipment and/or RIO modules to the **EIO Bus**. **NOTE:** Only devices enabled in the address server (DHCP) are available.
6	Configure the scanners.
7	Repeat steps 1, 2, 3, and 4 until the **Ethernet Network Manager** no longer detects any errors.

Network Manager Services

The network manager starts automatically when you open the **Network Inspector** tool. The global network management system (GNMS) is responsible for global network consistency. The following verifications are performed:

- GNMS verifies that all IP addresses are unique for the modules in the application.
- Each gateway that exists on your network is displayed in the network manager. By default, Control Expert notifies you if one of the gateways is missing an IP address. You can change this notification by clicking **Tools > Project Settings > General > Management of build messages > Missing gateway IP @ generates**. The options are a `detected warning` (default value) or nothing.
- Only a single RSTP switch can be configured as a root for a given network.
- The range of IP addresses is 1.0.0.0 … 126.255.255.255 or 128.0.0.0 … 223.255.255.255. Otherwise, an error is detected. Addresses 224.0.0.0 and greater are multicast or experimental addresses. Addresses starting at 127 are loopback addresses. Addresses 169.254/16 are reserved for automatic private IP addressing (APIPA).
- The tool verifies that the network address of the IP address is valid.
- The tool verifies that the host address of the IP address is valid, including that broadcast IP addresses are blocked.

- While an M580 controller uses *classless inter-domain routing* (CIDR), some IP addresses are not allowed to maintain compatibility:
  - in a class A network, IP addresses that end in 255.255.255
  - in a class B network, IP addresses that end in 255.255
  - in a class C network, IP addresses that end in 255
- The IP address is configured to access the gateway address. Therefore, the gateway address is within the subnetwork defined by the mask. The gateway is not accessible when it is not on the same subnetwork as the IP address.

Network Bandwidth Considerations

Control Expert alerts you when there are possible bandwidth considerations.

Ethernet RIO bandwidth:

- Control Expert displays a detected error message in the log window if the RIO bandwidth (originator -> target) or (target->originator) is greater than 8%.
- Control Expert displays a **warning** in the log window if the RIO bandwidth (originator -> target) or (target->originator) is greater than 6%.

Device network bandwidth (DIO and RIO combined):

- Control Expert displays a detected **error** in the log window if total Modbus and EIP bandwidth (originator -> target) or (target->originator) is greater than 40%.
- Control Expert displays a **warning** in the log window if total Modbus and EIP bandwidth (originator -> target) or (target->originator) is greater than 30%.

Application Response Time

What's in This Chapter

ART Computation Parameters 149
Application Response Time Example 151
Communication Loss Detection Times..... 155
Optimizing Application Response Time 156

ART Computation Parameters

The following diagram displays ART-related events and computation parameters. For details, refer to the *Design Principles of M580 Networks* appendix (see *Modicon M580 Frequently Used Architectures, System Guide*).

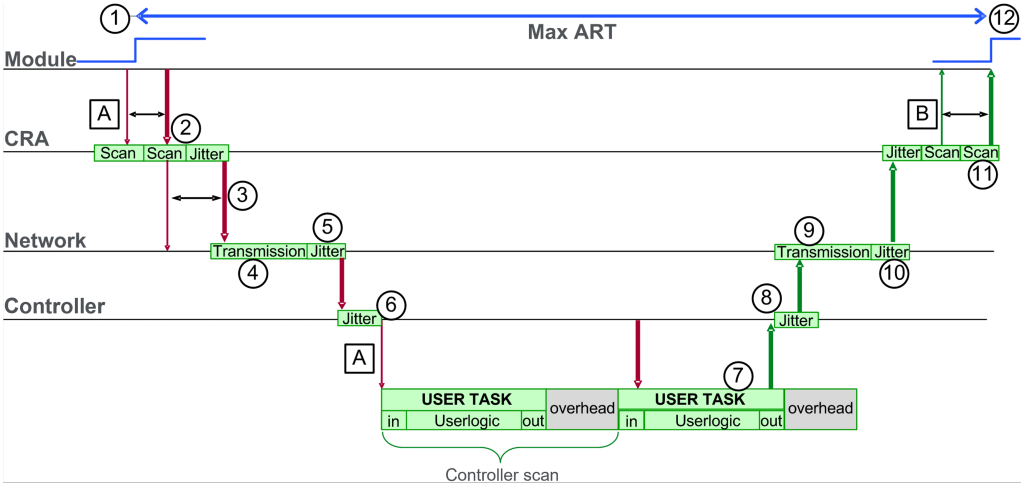

A: missed input scan	**6**: controller input jitter
B: missed output scan	**7**: operation of application logic (1 scan)
1: input turns ON	**8**: controller output jitter
2: CRA drop processing time	**9**: network delay
3: CRA input request packet interval (RPI) rate	**10**: network jitter
4: network delay	**11**: CRA drop processing time
5: network jitter	**12**: output applied

The ART computation parameters and their maximum values (in milliseconds) are described below:

ID	Parameter	Maximum value (ms)	Description
2	CRA drop processing time (CRA_Drop_ Process)	4.4	The sum of CRA input scan time and queue delay
3	CRA input RPI (RPI)	–	Controller task. Default = 0.5 * Controller period, if MAST is in periodic mode. If MAST is in cyclic mode, the default value is watchdog/4).
4	network input time (Network_In_Time)	2.496 (0.078 * 32) **NOTE:** The value 2.496 ms is based upon a packet size of 800 bytes and 32 hops[1].	The product of (network delay based on I/O packet size) * (the number of hops[1] the packet travels). The network delay component can be estimated as follows: I/O packet size (bytes): / Estimated network delay (µs): 128 / 26 256 / 35 400 / 46 800 / 78 1200 / 110 1400 / 127
5	network input jitter (Network_In_Jitter)	6.436 ((30 * 0.078) + (32 * 0.128)) **NOTE:** This value is based on a packet size of 800 bytes for RIO drops and 1500 bytes for DIO traffic.	Formula: ((number of RIO drops) * (network delay)) + ((number of distributed equipment hops[1]) * network delay)
6	Controller input jitter (CPU_In_Jitter)	5.41 (1 + (0.07 * 63))	Controller input queue delay (due to RIO drops and DIO traffic)
7/8	Controller scan time (CPU_Scan)	–	User defined Control Expert scan time, which can be either fixed or cyclic.
9	Controller output jitter (CPU_Out_Jitter)	2.17 (1 + (0.07 * 31))	Controller output queue delay.
10	network output time[2] (Network_Out_Time)	2.496	See calculation above for Network_In_Time.
11	network output jitter (Network_Out_Jitter)	4.096 (32 * 0.128)	Calculated as Network_In_Jitter without I/O frames from RIO drops.
12	CRA drop process time (CRA_Drop_Process)	4.4	The sum of CRA queue delay and output scan time.

1. A *hop* is a switch that a packet passes through on the path from a source (transmitting) device to a destination (receiving) device. The total number of *hops* is the number of passthrough switches along the path.

Estimating ART

Using the parameters described in the preceding table, you can compute the maximum estimated ART based on the maximum number of RIO modules and distributed equipment for an application.

The maximum ART value is equal to the sum of values in the **Maximum value** column. Therefore, the ART calculation for a controller scan time (CPU_Scan) of 50 ms and an RPI value of 25 ms is as follows:

4.4 + 25 + 2.496 + 6.436 + 5.41 + (2 * 50) + 2.17 + 2.496 + 4.096 + 4.4 = **156.904** ms ART

NOTE: If a cable break occurs or a cable is reconnected on the network, add an additional time period to the above ART calculation to allow for RSTP recovery. The additional time to be added equals: 50 ms + CPU_Scan/2.

Application Response Time Example

Introduction

This sample Modicon M580 application is designed to help you calculate the ART, or application response time (see *Modicon M580 Frequently Used Architectures, System Guide*).

Example of a BM•CRA312•0 Module in an RIO Sub-ring

This example calculates the maximum ART, representing the longest packet path from a BM•CRA312•0 X80 EIO adapter module in an RIO sub-ring (8, in the following graphic) to the controller with Ethernet I/O scanner service in the local rack (1). The calculation is performed from the perspective of the BM•CRA312•0 X80 EIO adapter modules in this M580 network design:

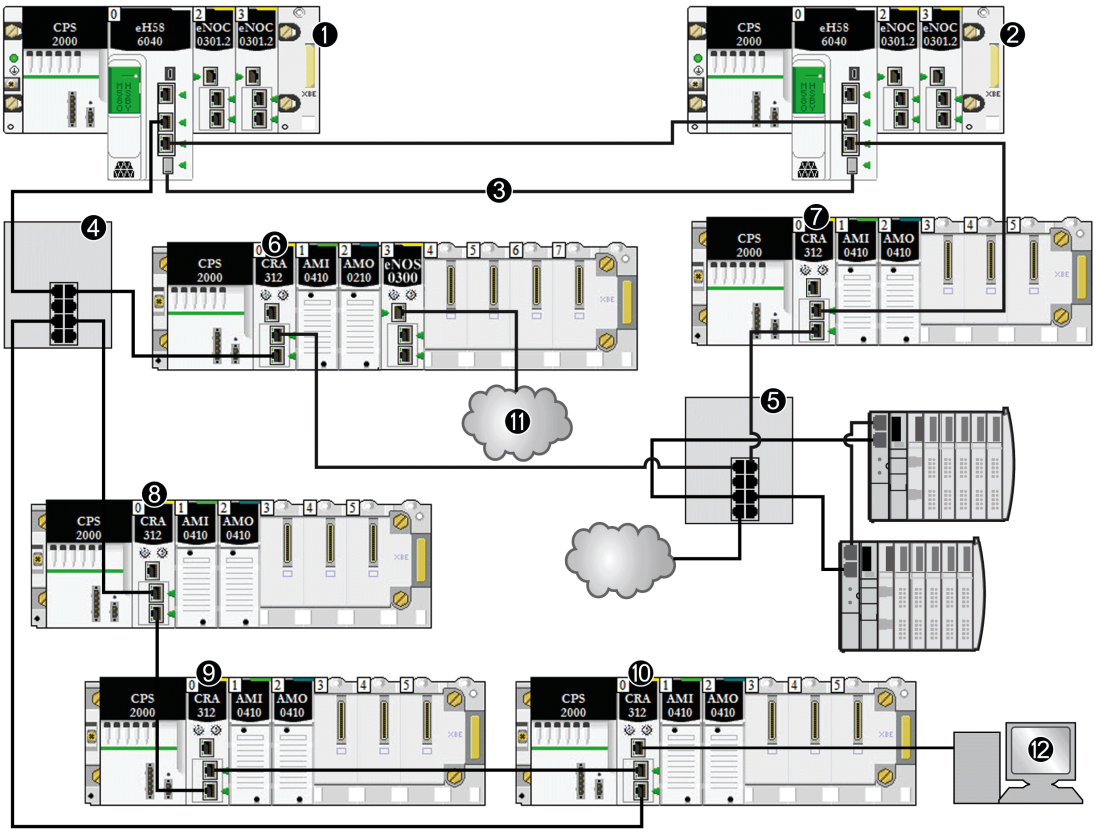

1 The primary rack includes an M580 controller.

2 The secondary rack includes an M580 controller.

3 The Hot Standby ports on the primary and standby controllers are linked.

4 A DRS on the main ring supports an RIO sub-ring.

5 A DRS on the main ring supports a DIO sub-ring and a DIO cloud.

6, 7 RIO drops on the main ring include BM•CRA312•0 X80 EIO adapter modules.

8, 9, 10 An RIO drop on an RIO sub-ring includes a BM•CRA312•0 X80 EIO adapter module.

11 A DIO cloud is connected to a BMENOS0300 network option switch module in an RIO drop.

12 An HMI device is connected to a BM•CRA312•0 X80 EIO adapter module in an RIO drop.

Calculation

In this example, assume there are breaks in two cables:

- **main ring:** There is a cable break between the controller with Ethernet I/O scanner service in the local rack (1) and the DRS (4).
- **RIO sub-ring:** There is a cable break between the DRS (4) and the BM•CRA312•0 X80 EIO adapter module in an RIO drop (8).

In this example, ART is calculated from the perspective of the adapter module in the RIO drop. Consider these application-specific elements when you calculate the ART:

- In this example, the maximum potential hop count is 10. That is, 10 is the maximum number of switches a packet can potentially pass through between RIO adapter module 8 and the controller with Ethernet I/O scanner service in the local rack (1). This is the case when a packet follows this path from RIO adapter module 8 and the local rack (1): 8, 9, 10, 4 (x2), 6, 5 (x2), 7, 2, 1.

  NOTE: The hop count includes all switches located along the route between the source input module and the controller, including the switches embedded in the BM•CRA312•0 X80 EIO adapter module. Count each DRS as two devices when you calculate the hop count.
- Jitter (packet queue delay) is introduced into the system by these design elements:
  - DIO sub-ring
  - RIO sub-ring, on which the BM•CRA312•0 X80 EIO adapter module is located
  - RIO drop
  - HMI
  - DIO cloud

Given these factors, ART computation parameters include:

Parameter	Maximum value (ms)	Comments
CRA drop process time (CRA_Drop_Process)	4.4	The sum of CRA input scan time and queue delay.
CRA input RPI (RPI)	—	Default = 0.5 * controller period.

Parameter	Maximum value (ms)	Comments
network input time (Network_In_Time)	(0.078 * 10) = 0.780	The hop count is 10 from the controller with Ethernet I/O scanner service in the local rack (1) to the BM•CRA312•0 X80 EIO adapter module in the RIO drop (8). hop sequence: 8, 9, 10, 4 (x2), 6, 5 (x2), 7, 2, 1 (Count each DRS [4, 5] as two devices when you calculate the capacity of your main-ring.)
network input jitter (Network_In_Jitter)	((0.078 * 5) +	RIO: The value 5 represents the number of BM•CRA312•0 modules plus the number of controllers based on a packet size of 800 bytes.
	(0.128 * 2))	DIO: The value 2 represents the number of packets from distributed equipment based on a packet size of 1500 bytes.
	= 0.646	
Controller input jitter (CPU_In_Jitter)	(1 + (0.07 * 5)) = 1.35	Read packets from the distributed devices attached to DRS 5 and the BM•CRA312•0 modules (6, 7, 9, 10).
Controller scan time (CPU_Scan)	2 * CPU_Scan	User defined, based on application.
Controller output jitter (CPU_Out_Jitter)	(1 + (0.07 * 5)) = 1.35	Controller Ethernet I/O service internal queue delay (owing to BM•CRA312•0 modules)
network output time (Network_Out_Time)	(0.078 * 10) = 0.780	See comment above for Network_In_Time.
network output jitter (Network_Out_Jitter)	(0.128 * 1) = .128	Owing to distributed devices.
BM•CRA312•0 drop process time (CRA_Drop_Process)	4.4	The sum of the BM•CRA312•0 X80 EIO adapter module (6) output scan time and queue delay.
For an explanation of each parameter, refer to the topic ART Computation Parameters.		

The maximum ART value is equal to the sum of values in the **Maximum value** column. Therefore, the ART calculation for a controller scan time (CPU_Scan) of 50 ms and an RPI value of 25 ms looks like this:

4.4 + 25 + 0.780 + 0.646 + 1.35 + (2*50) + 1.35 + 0.780 + 0.128 + 4.4 = **138.834** ms ART

NOTE: If a cable break exists on the network, add an additional time period, equal to 50 ms + RPI, to the above ART calculation. The added time allows for RSTP recovery from the cable break.

Communication Loss Detection Times

Overview

An M580 system can detect the existence of communication loss in the following ways:

- a broken cable is detected by a controller with Ethernet I/O scanner service and a BM•CRA312•0 (e)X80 EIO adapter module
- a controller with Ethernet I/O scanner service detects that a BM•CRA312•0 module has stopped communicating.
- a BM•CRA312•0 module detects that a controller with Ethernet I/O scanner service has stopped communicating

The time required by the system to detect each type of communication loss is described below.

Broken Cable Detection Time

A controller and a BM•CRA312•0 module can detect a broken or detached cable within 5 ms of the occurrence.

NOTE: A network that includes up to 31 drops and a controller with Ethernet I/O scanner service can recover communications within 50 ms from the time the cable break is detected.

NOTE: When a broken cable is connected to an RIO port and other cables on the ring are healthy, wait for the LINK LED (the status of the port) to appear before removing another cable in the system. If all links are broken simultaneously, the device goes into fallback state.

RIO Drop Loss Detection Time

A controller with Ethernet I/O scanner service can detect and report the communication loss of a BM•CRA312•0 module within the time defined by the following formula:

Detection time = (xMultiplier * MAST period) + (scan time), where:

- MAST period / 2 = RPI for the MAST task
- RPI = the input refresh rate from the BM•CRA312•0 module to the controller
- xMultiplier is a value in the range 4...64. The value xMultiplier is determined by the following table:

MAST period / 2 (ms)	xMultiplier
2	64
3...4	32
5...9	16
10...21	8
≥ 22	4

For RPI details, refer to the *Connection Parameters* topic in the *Modicon M580 Remote I/O Modules Installation and Configuration Guide*.

Controller with Ethernet I/O Scanner Service Loss Detection Time

A BM•CRA312•0 module in an RIO drop can detect the communication loss of a controller with Ethernet I/O scanner service within the time defined by the following formula:

Detection time = (xMultiplier x MAST period / 2) + (controller scan time), where:

- MAST period / 2 = the output refresh rate from the controller with Ethernet I/O scanner service to the BM•CRA312•0 module
- xMultiplier is a value in the range 4...64. The value xMultiplier is determined by the following table:

RPI (ms)	xMultiplier
2	64
3...4	32
5...9	16
10...21	8
≥ 22	4

Optimizing Application Response Time

Overview

You can reduce the maximum application response time (ART) for your system, by employing these network design tips:

- use only the minimally required number of RIO drops (BM•CRA312•0 X80 EIO adapter modules)
- use only the minimally required number of RIO input and output modules
- place the RIO drops with the fastest communications capacity nearest to the local rack containing the controller with Ethernet I/O scanner service

In addition, you can further reduce ART by using the FAST task in your Control Expert logic.

NOTE: In an M580 Hot Standby (see Modicon M580 Hot Standby, Frequently Used Architectures, System Guide) system, plan your topology accordingly so the amount of data exchanged is reduced.

Reducing the Number of RIO Drops

When you reduce the number of RIO drops in your system, you also reduce:

- the number of hops that a packet passes through from an RIO drop to the controller with Ethernet I/O scanner service in the local rack
- the number of packets received by the controller with Ethernet I/O scanner service

By reducing these values, you also reduce the following elements of ART:

- network input/output times
- network input/output jitter
- controller with Ethernet I/O scanner service
- controller scan time (the greatest savings)

Reducing the Number of Remote Input and Output Modules

When you reduce the number of RIO input and output modules, you also reduce the size of the packet, which in turn reduces the following elements of ART:

- network input/output time
- network input/output jitter
- BM•CRA312•0 module drop process time

Placing the Fastest RIO Drops Nearest to the Local Rack

When you place the fastest RIO drops nearest to the local rack, you reduce the number of hops that a packet passes through from the RIO drop to the local rack. You also reduce the following elements of ART:

- network input/output time
- network input/output jitter

Using the FAST Task to Optimize ART

Using the FAST task can result in smaller ART because the I/O data associated with the FAST task can be executed at a higher priority. ART when using FAST task is not degraded because of the task's priority.

NOTE: These efficiencies of the FAST task are not realized during end-of-scan delays.

	Scan Type	**Period (ms) / Default Value**	**Watchdog (ms) / Default Value**	**Usage (I/O)**
MAST[1]	cyclic[2] or periodic	1...255 / 20	10...1500 by 10 / 250	local and remote racks
FAST	periodic	1...255 / 5	10...500 by 10 / 100	local and remote racks[3]
AUX0[5]	periodic	10...2550 by 10 / 100	100...5000 by 100 / 2000	local and remote racks[3]
AUX1[5]	periodic	10...2550 by 10 / 200	100...5000 by 100 / 2000	local and remote racks[3]
I/O Event[5]	event (128 maximum devices from 0 to 127)			local rack[4]

[1] The MAST task is mandatory.

[2] When set to cyclic mode, the minimum cycle time is 4 ms if there is an RIO network and 1 ms if there is no RIO network in the system.

[3] FAST and AUX tasks are supported for the BM•CRA31210 X80 EIO adapter modules only.

[4] DDDT syntax is not supported in the I/O event task.

[5] Not supported by Hot Standby systems.

The Control Expert help pages further describe the multiple tasks (see EcoStruxure™ Control Expert, Program Languages and Structure, Reference Manual).

Diagnosing Complex M580 Sytems

What's in This Part

System Diagnostics 160

Introduction

This part describes the diagnosing of complex M580 system architectures.

System Diagnostics

What's in This Chapter

System Diagnostics 161
Main Ring Diagnostics 166
Sub-Ring Diagnostics 167

Overview

This chapter describes the system diagnostics for complex M580 systems.

NOTE: For diagnostics at the module level, refer to the respective module user guide.

- For the controller with Ethernet I/O scanner service, refer to the *Modicon M580 Hardware Reference Manual* (see Modicon M580, Hardware, Reference Manual).
- For the BM•CRA312•0 X80 EIO adapter module, refer to the *Modicon M580 Remote I/O Modules Installation and Configuration Guide* (see Modicon M580, RIO Modules, Installation and Configuration Guide).
- For the BMENOC0301/BMENOC0311 Ethernet communication module, refer to the *Modicon M580 BMENOC0301/11 Ethernet Communication Module Installation and Configuration Guide* (see Modicon M580, BMENOC0301/0311 Ethernet Communications Module, Installation and Configuration Guide).
- For the BMENOC0302(H) high Ethernet communication module, refer to the *Modicon M580* BMENOC0302(H) *High Performance Ethernet Communication Module Installation and Configuration Guide*.
- For the BMECRA31310 eX80 redundant EIO adapter module, refer to the *Modicon Modicon M580 Redundant Communication Adapter Module (PRP) for X80 RIO Drops Installation and Configuration Guide* (see Modicon Modicon M580 Redundant Communication Adapter Module (PRP) for X80 RIO Drops Installation and Configuration Guide).
- For the Modicon Edge I/O NTS modules, refer to the *Modicon Edge I/O System Planning and Installation Guide* (see Modicon Edge I/O System Planning and Installation Guide).

System Diagnostics

Introduction

These tables describe the various causes for communication interruptions in complex M580 system architectures.

NOTE: For detailed module diagnostic data, refer to the respective module user guide.

- For the controller with Ethernet I/O scanner service, refer to the *Modicon M580 Hardware Reference Manual* (see Modicon M580, Hardware, Reference Manual).
- For the BM•CRA312•0 X80 EIO adapter modules, refer to the *Modicon M580 Remote I/O Modules Installation and Configuration Guide* (see Modicon M580, RIO Modules, Installation and Configuration Guide).
- For the BMENOC0301/BMENOC0311 Ethernet communication module, refer to the *Modicon M580 BMENOC0301/11 Ethernet Communication Module Installation and Configuration Guide* (see Modicon M580, BMENOC0301/0311 Ethernet Communications Module, Installation and Configuration Guide).
- For the BMENOC0302(H) high Ethernet communication module, refer to the *Modicon M580* BMENOC0302(H) *High Performance Ethernet Communication Module Installation and Configuration Guide*.
- For the BMENOS0300 network option switch module, refer to the *Modicon M580 BMEN0S0300 Network Option Switch Module Installation and Configuration Guide*.
- For the BMENOC0321 control network switch module, refer to the *Modicon M580 BMENOC0321 Control Network Module Installation and Configuration Guide*.
- For the Modicon Edge I/O NTS modules, refer to the *Modicon Edge I/O System Planning and Installation Guide* (see Modicon Edge I/O System Planning and Installation Guide).

NOTE: Refer to the *EcoStruxure™ Control Expert, System Bits and Words, Reference Manual* for a detailed explanation of system bits and words.

Ethernet Communication Modules in the Local Rack

Monitor diagnostics for Ethernet Communication Modules in the Local Rack:

Status of...	Module [1]	User Application [2]	Control Expert [3]	Rack Viewer [5]	Ethernet Management Tool [6]
BMENOC0301/ BMENOC0311/ BMENOC0302(H) Ethernet backplane connection broken	BMENOC0301/ BMENOC0311: BMENOC0302(H) active LED				
BMENOC0301/ BMENOC0311/ BMENOC0302(H) reset	BMENOC0301/ BMENOC0311/ BMENOC0302(H) LED	BMENOC0301/ BMENOC0311/ BMENOC0302(H) health bit (in controller system word) I/O scanner connection status	DTM online diagnostic inoperable	yes	yes
BMENOC0301/ BMENOC0311/ BMENOC0302(H) inoperable	BMENOC0301/ BMENOC0311/ BMENOC0302(H) LED	BMENOC0301/ BMENOC0311/ BMENOC0302(H) health bit (in controller system word) I/O scanner connection status	DTM online diagnostic inoperable	yes	yes

1. Refer to the module LED to detect a pulled cable, an inoperable module, or reset module (LED on, off, or flashing to display status or detected error pattern).
2. Refer to your application to detect the module status (link Ethernet port, EIP scanner status, DDDT, system words).
3. Use the DTM browser in Control Expert to detect whether a BMENOC0301/BMENOC0311/BMENOC0302(H) is inoperable or has been reset.
4. Not applicable.
5. Use the FactoryCast rack viewer to detect if a BMENOC0301/BMENOC0311/BMENOC0302(H) is inoperable or has been reset.
6. Use ConneXium Network Manager, HiVision, or other Ethernet network management tool to detect if a BMENOC0301/BMENOC0311/BMENOC0302(H) is inoperable or has been reset.

Ethernet RIO Network

Monitor diagnostics for the Ethernet RIO network:

Status of...	Module [1]	User Application [2]	Rack Viewer [5]	Ethernet Management Tool [6]
duplicate IP address in controller or BMXCRA312•0	BMEP58•0•0 LED BM•CRA312•0 LED			
controller (single) cable pulled out	BMEP58•0•0 active LED	controller status byte controller DDDT	yes	yes
BM•CRA312•0 (single) cable pulled out	BM•CRA312•0 ACT LED	drop connection status (in CRA DDDT)		yes
BMENOS0300 diagnostic	ACT LED		web page	yes
DRS powered off	DRS power LED	DATA_EXCH block: monitor DRS (ports 5 and 6)		yes
DRS cable pulled out	DRS ACT LED	DATA_EXCH block: monitor DRS (ports 5 and 6)	DRS web	yes
main ring cable broken, page 166		EIO system bit (part of controller DDT)	DRS web (only if cable on DRS port is inoperable)	
single ring cable broken, page 167		DATA_EXCH block: monitor DRS (ports 5 and 6)	DRS web	
RIO traffic too slow (due to incorrect configuration or cabling)		DATA_EXCH block: monitor DRS (port 5 and 6) Also possible via CRA DDDT		
DIO traffic too slow (generate too much traffic)		DATA_EXCH block: monitor DRS (port 5 and 6)	DRS web	MIB

1. Refer to the module LED to detect a pulled cable or a powered-off device (LED on, off, or flashing to display status or detected error pattern).
2. Refer to your application (via system word, controller DDDT, or DATA_EXCH block) to detect a pulled cable, a powered-off device, a break in the main ring or sub-ring, or slow network traffic.
3. Not applicable.
4. Use the DRS web pages to detect a pulled cable or a break in the main ring.
5. Use the rack viewer to detect if a controller is inoperable or has been reset.
6. Use ConneXium Network Manager, HiVision, or other Ethernet network management tool to detect a pulled cable in a controller, BM•CRA312•0 X80 EIO adapter module, or DRS. Also use this tool to detect DRS power state and slow DIO traffic.

Ethernet RIO Drops

Monitor diagnostics for Ethernet RIO drops:

Status of...	Module [1]	User Application [2]	Rack Viewer [5]	ConneXium Network Manager [6]
BM•CRA312•0 powered off or disconnected	BM•CRA312•0 LED	drop connection status (in controller DDDT) detected drop error status (in controller DDDT)		yes
BM•CRA312•0 not configured	BM•CRA312•0 LED controller LED	drop connection status (in controller DDDT) detected drop error status (in controller DDDT)		yes (It does not appear on the screen.)
extended rack inoperable (detected error in BM•XBE10000 or cable)	module PWR LED	remote module health bits (in device DDDT)	yes	

1. Refer to the module LED to detect a powered-off, disconnected or unconfigured BM•CRA312•0 X80 EIO adapter module or to detect an inoperable extended rack (LED on, off, or flashing to display status or detected error pattern).
2. Refer to your application (via system word) to detect a powered-off, disconnected or unconfigured BM•CRA312•0 X80 EIO adapter module or to detect an inoperable extended rack.
3. Not applicable.
4. Not applicable.
5. Use the FactoryCast rack viewer to detect a powered-off, disconnected or unconfigured BM• XBE 100 00 module.
6. Use ConneXium Network Manager, HiVision, or other Ethernet network management tool to detect a powered-off, disconnected or unconfigured BM•CRA312•0 X80 EIO adapter module.

RIO Modules

Monitor diagnostics for RIO modules:

Status of...	Module [1]	User Application [2]	Rack Viewer [5]
module absent, inoperable, or misplaced	May be possible via LEDs	remote module health bit (in controller DDDT and in Device DDT (for Modicon X80 modules))	yes
module status	module LED (depends on module)	module's status byte	yes

1. Refer to the module LED to detect status (LED on, off, or flashing to display status or detected error pattern).
2. Refer to your application (via system word or status byte) to detect module status, including absent, inoperable, or misplaced module.
3. Not applicable.
4. Not applicable.
5. Use the FactoryCast rack viewer to detect module status, including absent, inoperable, or misplaced module.
6. Not applicable.

Distributed Equipment

Monitor diagnostics for distributed equipment:

Status of...	User Application [2]	Rack Viewer [5]	ConneXium Network Manager [6]
disconnected	controller connection status	yes	yes

1. Not applicable.
2. Refer to your application (via controller connection status) to detect disconnected distributed equipment.
3. Not applicable.
4. Not applicable.
5. Use the FactoryCast rack viewer to detect module status, including absent, inoperable, or misplaced module.
6. Use ConneXium Network Manager, HiVision, or other Ethernet network management tool to detect a powered-off, disconnected or unconfigured BM•CRA312•0 X80 EIO adapter module.

Main Ring Diagnostics

Diagnosing the RIO Main Ring

You can monitor breaks in the main ring by diagnosing the `REDUNDANCY_STATUS` bits in the controller with Ethernet I/O scanner service on the local rack DDT. The system detects and reports in this bit a main ring cable break that persists for at least 5 seconds.

Within the `REDUNDANCY_STATUS` bit:

- 0 = A cable is broken or a device has stopped.
- 1 = loop is present and healthy.

NOTE: Refer to the M580 RIO guide (see Modicon M580, RIO Modules, Installation and Configuration Guide) for a list of diagnostic status bits.

Sub-Ring Diagnostics

Detecting a Sub-ring Break via DRS

This topic describes how to detect a cable break in a sub-ring on the RIO network by diagnosing a DRS.

Step	Action
1	Write a `DATA_EXCH` block to the DRS managing the sub-ring of interest. **NOTE:** Use the controller with Ethernet I/O scanner service to send `DATA_EXCH` commands to diagnose the status of sub-rings. For other operations (get remote statistics, read data, etc.), send a `DATA_EXCH` command from a communication module on the local rack.
2	Read the states of ports 5 and 6 on the DRS. The possible port state values are: **1** disabled **2** blocking **3** listening **4** learning **5** forwarding **6** broken
3	• If either port 5 or 6 is in a blocking state (2), then the loop is present and healthy (no cable break.) • If both ports 5 and 6 are in any other state besides blocking state (2), then there is a cable break on the sub-ring. 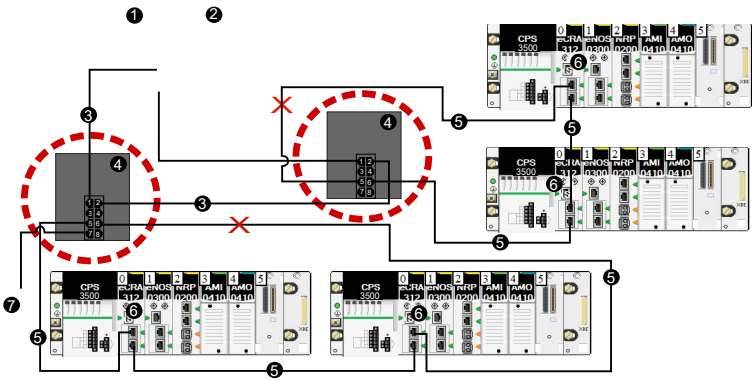

This graphic shows breaks in 2 sub-rings connected by DRSs on the main ring. The arrows point to the DRSs, on which you monitor ports 5 and 6 in your application using a DATA_EXCH block:

1 controller with Ethernet I/O scanner service on the local rack

2 BMENOC0301/BMENOC0311/BMENOC0302(H) Ethernet communication module (with the Ethernet backplane connection enabled), managing the DIO cloud (7)

3 main ring

4 DRS connected to the main ring and RIO sub-rings

5 RIO sub-ring with a communication break (indicated by an **X**)

6 RIO drop (including a BM•CRA312•0 X80 EIO adapter module)

7 DIO cloud connected to a DRS

> **NOTE:** When you add or remove devices from your network configuration, modify the sub-ring cable break logic in your application.

Writing a DATA_EXCH Block to Diagnose a Sub-ring Break

This is an example of a DATA_EXCH block created in a Control Expert application to read the DRS ports 5 and 6 state.

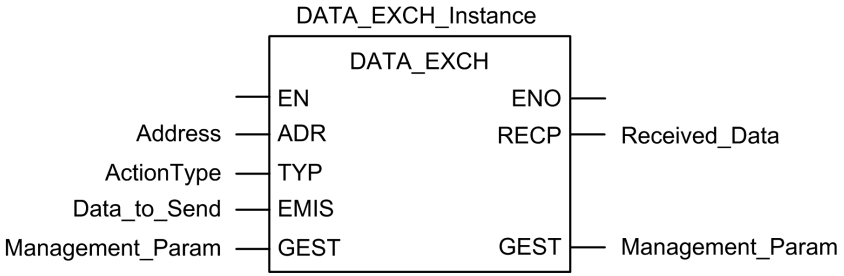

In the Control Expert application, write a DATA_EXCH block to send an EIP explicit message to the DRS that is managing the sub-ring. This EIP explicit message can be sent via the BM•CRA312•0 module or other communication module that is managing devices in the device network.

> **NOTE:** Use a controller with Ethernet I/O scanner service to send DATA_EXCH commands to diagnose the status of sub-rings.

To create the DATA_EXCH block, create and assign variables, and connect the block to an AND block. The logic continuously sends an explicit message when it receives confirmation of success or detected error.

Refer to the Explicit Messaging (see Modicon M340, BMX NOC 0401 Ethernet Communication Module, User Manual) topic in the *Modicon M340 BMX NOC 0401 Ethernet Communication Module User Manual* for details on using the DATA_EXCH block.

Input Parameters

Create variables and assign input pins. In this example, variables have been created (and named) as described below. (You can use different variable names in your explicit messaging configurations.)

Parameter	Data Type	Description
`Address`	Array [0...7] of `INTD`	The path to the DRS. Use the ADDM function. For more details refer to *Configuring EtherNet/IP Explicit Messaging Using DATA_EXCH* topic in the *Modicon M580, BMENOC0301/0311 Ethernet Communications Module, Installation and Configuration Guide*or the *ConfigureEtherNet/IP Explicit Messaging with DATA_EXCH* topic in the *Modicon M580, BMENOC0302 High Performance Ethernet Communication Module, Installation and Configuration Guide*
`ActionType`	`INT`	The type of action to perform. The setting = 1 (transmission followed by await reception).
`Data_to_Send`	Array [n...m] of `INT`	For more details refer to*Configuring EtherNet/IP Explicit Messaging Using DATA_EXCH* topic in the *Modicon M580, BMENOC0301/0311 Ethernet Communications Module, Installation and Configuration Guide* or the *ConfigureEtherNet/IP Explicit Messaging with DATA_EXCH* topic in the *Modicon M580, BMENOC0302 High Performance Ethernet Communication Module, Installation and Configuration Guide*.

Input/Output Parameters

Create variables and assign input pins. In this example, variables have been created (and named) as described below. (You can use different variable names in your explicit messaging configurations.)

Parameter	Data Type	Description
Management_Param	Array [0...3] of `INT`	Consists of 4 words. For more details refer to *Configuring the DATA_EXCH Management Parameter* topic in the *Modicon M580, BMENOC0301/0311 Ethernet Communications Module, Installation and Configuration Guide* or the *Configuring the DATA_EXCH Management Parameter* topic in the*Modicon M580, BMENOC0302 High Performance Ethernet Communication Module, Installation and Configuration Guide*.

Output Parameters

Create variables and assign output pins. In this example, variables have been created (and named) as described below. (You can use different variable names in your explicit messaging configurations.)

Parameter	Data Type	Description
`Received_Data`	Array [n...m] of `INT`	The EtherNet/IP (CIP) response. For more details refer to *Configuring EtherNet/IP Explicit Messaging Using DATA_EXCH* topic in the *Modicon M580, BMENOC0301/0311 Ethernet Communications Module, Installation and Configuration Guide* or the *ConfigureEtherNet/IP Explicit Messaging with DATA_EXCH* topic in the *Modicon M580, BMENOC0302 High Performance Ethernet Communication Module, Installation and Configuration Guide*.

Appendices

What's in This Part

Frequently Asked Questions (FAQ) 173
Complex Network Design Principles 174

Frequently Asked Questions (FAQ)

What's in This Chapter

FAQs 173

Introduction

This chapter presents a list of questions and answers regarding the M580 system that are frequently asked in some context.

FAQs

Topologies

Do I have to use DRSs in the M580 system?

Yes, if you use a switch in the M580 system, use a DRS and download the appropriate predefined configuration for it. There are several DRS models available, based on the network topology, page 32.

NOTE:

- DRSs **are not** used in a simple daisy chain loop topology (see *Modicon M580 Frequently Used Architectures, System Guide*).
- DRSs **are** used in a high capacity daisy chain loop topology, page 29 to support distributed equipment and sub-rings.

Complex Network Design Principles

What's in This Chapter

RIO with DIO Network Design Principles 174
Defined Architecture: Topologies..... 175
Defined Architecture: Junctions 178

Introduction

This chapter describes the design principles for M580 network topologies that consist of a main ring with optional RIO/DIO sub-rings.

RIO with DIO Network Design Principles

Overview

An M580 network can transmit data from distributed equipment. This is accomplished by using equipment that is configured to implement the following network design principles:

- **Controller**: controller with Ethernet I/O scanner service on the local rack
- BMENOS0300 network option switch module
- **Implementation of Defined Architectures**: An M580 network supports the addition of DIO data traffic only in specific network designs, including one of these:
  - a main ring joined by a BMENOS0300 network option switch module to a DIO cloud
  - a main ring with one or more RIO drops

  These designs provide a limited number and type of junctions between network segments and a limited hop count from any device to the controller.
- **QoS Traffic Prioritization**: DIO packets are assigned the lower priority. They wait in a queue until a device finishes transmitting all RIO data packets. This limits RIO jitter to 128 µs, which represents the time required to complete the transmission of one DIO packet that has already begun.
- **DIO data is not delivered in real-time**: DIO packets wait in a queue until all RIO packets are transmitted. DIO data transmissions use the network bandwidth that remains after RIO data has been delivered.

Defined Architecture: Topologies

Introduction

The defined architecture restricts the number of hops a packet takes from an RIO drop to the controller. By restricting the number of hops, the application response time (ART) for the system can be calculated.

In any M580 network topology, the hop count is used as a factor in calculating network delay (see *Modicon M580 Frequently Used Architectures, System Guide*). To determine the hop count from the perspective of an RIO drop, count the number of switches from the remote drop to the controller.

High Capacity Sub-System

The following is an example of a high capacity M580 system, consisting of a main ring, with multiple sub-rings:

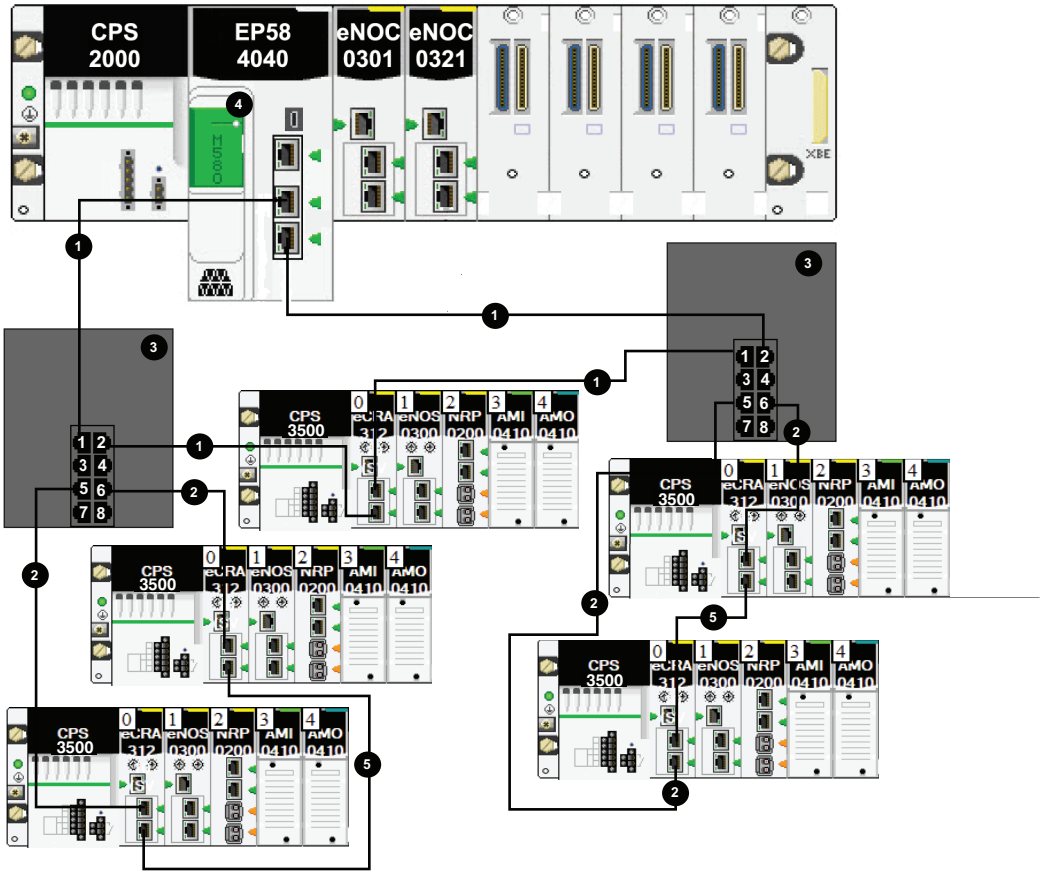

1 DRS connection to the RIO main ring

2 DRS connection to the RIO sub-ring

3 DRS connecting the main ring to a sub-ring

4 controller with Ethernet I/O scanner service on the local rack

5 RIO drop with a BM•CRA312•0 X80 EIO adapter module

In this M580 network topology (with a single main ring and multiple sub-rings), these restrictions apply:

The maximum number of...	...is...
hops in a network path	17
RIO modules	16
devices in any sub-ring	16

Defined Architecture: Junctions

Introduction

An M580 network can support both RIO modules (including BM•CRA312•0 X80 EIO adapter modules) and dual-ring switches (DRSs).

Both RIO modules and DRSs constitute a network junction, as follows:

- An RIO module joins ring traffic with RIO module traffic.
- A DRS joins sub-ring traffic with main ring traffic.

Each junction presents the queueing point, which can add delay — or jitter — to the system. If two packets simultaneously arrive at a junction, only one can be immediately transmitted. The other waits for a period referred to as “one delay time” before it is transmitted.

Because RIO packets are granted priority by the M580 network, the longest an RIO packet can wait at a junction is one delay time before it is transmitted by the module or DRS.

The following scenarios depict how DRSs handle packets that arrive simultaneously.

DRS

In this example, a DRS receives a steady flow of packets from both the main ring and an RIO sub-ring:

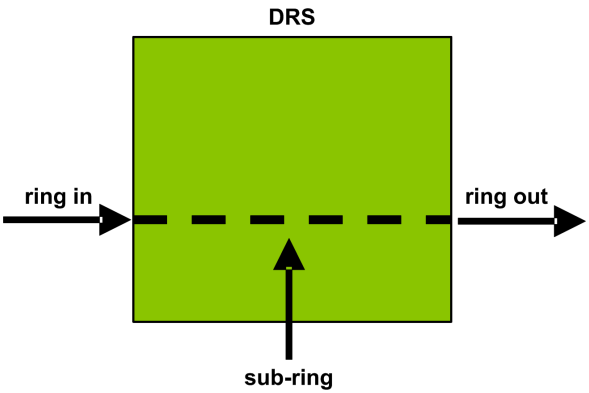

The DRS handles RIO packets in this sequence:

Time	Ring In	Sub-ring	Ring Out	Comment
T0	1 (started)	a	–	Packet “a” arrived after transmission of packet “1” begins.
T1	2	b	1	Packets “2” and “b” arrive simultaneously.
T2	3	c	a	Packets “3” and “c” arrive simultaneously.
T3	4	d	2	Packets “4” and “d” arrive simultaneously.
T4	5	e	b	Packets “5” and “e” arrive simultaneously.

DRS with Sub-ring Cable Break

In this example, a DRS receives a steady flow of packets from the main ring and also from both segments of an RIO sub-ring with a cable break:

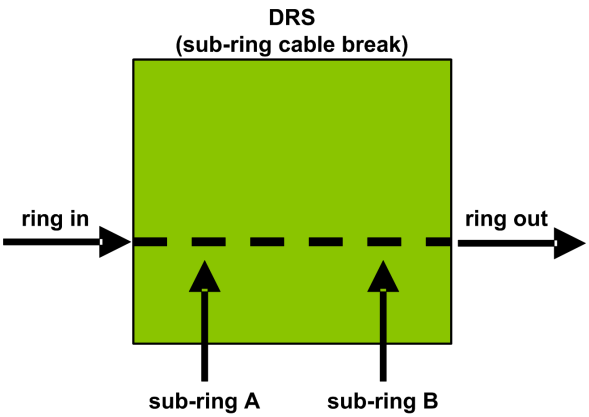

The DRS handles RIO packets in this sequence:

Time	Ring In	Sub-ring A	Sub-ring B	Ring Out	Comment
T0	1 (started)	a	p	–	Packets “a” and “p” arrive after transmission of packet “1” begins.
T1	2	b	q	1	Packets “2” , “b,” and “q” arrive simultaneously.
T2	3	c	r	a	Packets “3”, “c,” and “r” arrive simultaneously.

Time	Ring In	Sub-ring A	Sub-ring B	Ring Out	Comment
T3	4	d	s	p	Packets “4”, “d,” and “s” arrive simultaneously.
T4	5	e	t	2	Packets “5”, “e,” and “t” arrive simultaneously.

Glossary

A

adapter:

An adapter is the target of real-time I/O data connection requests from scanners. It cannot send or receive real-time I/O data unless it is configured to do so by a scanner, and it does not store or originate the data communications parameters necessary to establish the connection. An adapter accepts explicit message requests (connected and unconnected) from other devices.

ART:

(*application response time*) The time a controller application takes to react to a given input. ART is measured from the time a physical signal in the controller turns on and triggers a write command until the remote output turns on to signify that the data has been received.

C

CPU:

(*central processing unit*) The CPU, also known as the processor or controller, is the brain of an industrial manufacturing process. It automates a process as opposed to relay control systems. CPUs are computers suited to survive the harsh conditions of an industrial environment.

D

determinism:

For a defined application and architecture, you can predict that the delay between an event (change of value of an input) and the corresponding change of a controller output is a finite time *t*, smaller than the deadline required by your process.

DIO cloud:

A group of distributed equipment that is not required to support RSTP. DIO clouds require only a single (non-ring) copper wire connection. They can be connected to some of the copper ports on DRSs, or they can be connected directly to the controller or Ethernet communications modules in the *local rack*. DIO clouds **cannot** be connected to *sub-rings*.

DIO network:

A network containing distributed equipment, in which I/O scanning is performed by a controller with DIO scanner service on the local rack. DIO network traffic is delivered after RIO traffic, which takes priority in an RIO network.

DIO:

(*distributed I/O*) Also known as distributed equipment. DRSs use DIO ports to connect distributed equipment.

distributed equipment:

Any Ethernet device (Schneider Electric device, PC, servers, or third-party devices) that supports exchange with a controller or other Ethernet I/O scanner service.

DRS:

(*dual-ring switch*) A ConneXium extended managed switch that has been configured to operate on an Ethernet network. Predefined configuration files are provided by Schneider Electric to downloaded to a DRS to support the special features of the main ring / sub-ring architecture.

E

Ethernet DIO scanner service:

This embedded DIO scanner service of M580 controllers manages distributed equipment on an M580 device network.

Ethernet I/O scanner service:

This embedded Ethernet I/O scanner service of M580 controllers manages distributed equipment **and** RIO drops on an M580 device network.

L

local rack:

An M580 rack containing the controller and a power supply. A local rack consists of one or two racks: the main rack and the extended rack, which belongs to the same family as the main rack. The extended rack is optional.

M

main ring:

The main ring of an Ethernet RIO network. The ring contains RIO modules and a local rack (containing a controller with Ethernet I/O scanner service) and a power supply module.

P

PAC:

programmable automation controller. The PAC is the brain of an industrial manufacturing process. It automates a process as opposed to relay control systems. PACs are computers suited to survive the harsh conditions of an industrial environment.

Q

QoS:

(*quality of service*) The practice of assigning different priorities to traffic types for the purpose of regulating data flow on the network. In an industrial network, QoS is used to provide a predictable level of network performance.

R

RIO drop:

One of the three types of RIO modules in an Ethernet RIO network. An RIO drop is an M580 rack of I/O modules that are connected to an Ethernet RIO network and managed by an Ethernet RIO adapter module. A drop can be a single rack or a main rack with an extended rack.

RIO network:

An Ethernet-based network that contains 3 types of RIO devices: a local rack, an RIO drop, and a ConneXium extended dual-ring switch (DRS). Distributed equipment may also participate in an RIO network via connection to DRSs or BMENOS0300 network option switch modules.

RPI:

(requested packet interval) The time period between cyclic data transmissions requested by the scanner. EtherNet/IP devices publish data at the rate specified by the RPI assigned to them by the scanner, and they receive message requests from the scanner at each RPI.

S

sub-ring:

An Ethernet-based network with a loop attached to the main ring, via a dual-ring switch (DRS) or BMENOS0300 network option switch module on the main ring. This network contains RIO or distributed equipment.

Index

A

application response time 149
examples 151
optimizing..... 156
architecture
sample..... 144
ART 149
examples 151
optimizing..... 156

C

communication loss detection 155
broken cable..... 155
RIO drop 155
copper main ring
copper DIO sub-ring.....48
copper RIO sub-ring.....44
copper RIO main ring configurations.....37
copper/fiber long haul Hot Standby link 110
copper/fiber main ring..... 53, 59
copper DIO sub-ring.....66
copper RIO sub-ring.....61

D

determinism..... 149
device network.....28
diagnostics
distributed equipment..... 165
main ring..... 166
RIO drops 164
RIO modules 164
RIO network 162
sub-ring 167
distributed equipment diagnostics..... 165
DRS.....21
predefined configuration files 34, 134
redundant master 69, 77, 85, 100
redundant slave..... 73, 81, 105

E

Ethernet network manager..... 145

F

fiber long haul link 64
fiber main ring
copper DIO sub-ring.....56
copper RIO sub-ring.....51
fiber RIO main ring configurations.....39
fiber/copper long haul Hot Standby link 110
fiber/copper main ring..... 53, 59
copper DIO sub-ring.....66
copper RIO sub-ring.....61
frequently asked questions 173

H

high-capacity daisy chain loop
planning 29
Hot Standby
long haul link 110

I

installing predefined configuration files..... 134
interlinking a Modbus TCP/IP
communication module 64, 90
I/O memory..... 139

L

long haul link.....64, 110

M

main ring diagnostics..... 166
main ring/sub-ring redundancy 40
MAST cycle time
calculating..... 141
master copper main ring
copper DIO sub-ring.....77
copper RIO sub-ring.....69
master copper/fiber main ring

copper DIO sub-ring 100
copper RIO sub-ring 85
master fiber/copper main ring
copper DIO sub-ring 100
copper RIO sub-ring 85
MCSESM083F23F1 ..... 44, 48, 69, 73, 77, 81
MCSESM103F2CS1 ....51, 56, 61, 66, 86, 101, 106, 110, 114, 119, 123, 131
MCSESM103F2CU1 ....51, 56, 61, 66, 86, 101, 106, 110, 114, 119, 123, 131

N

network
device 28
network design examples 175
network design principles
RIO with DIO networks 174
network topology
high-capacity daisy chain loop 29

O

obtaining predefined configuration files 134

P

port mirroring 42
predefined configuration files 34
copper main ring 37
DRS 34
fiber main ring 39
installing 134
obtaining 134

R

redundant master DRS 69, 77, 85, 100
redundant slave DRS 73, 81, 105
RIO defined architecture
junctions 178
RIO drop diagnostics 164
RIO module diagnostics 164
RIO network diagnostics 162

S

slave copper main ring
copper DIO sub-ring 81
copper RIO sub-ring 73
slave copper/fiber main ring
copper DIO sub-ring 105
slave fiber/copper main ring
copper DIO sub-ring 105
sub-ring diagnostics 167
system throughput 143

T

TCSESM103F2CS1 ..... 123, 127
TCSESM103F2CU1 ..... 123, 127
throughput 143

Schneider Electric
1884 Boulevard de la Défense
92000 Nanterre
France

www.se.com

© 2026 Schneider Electric. All rights reserved.

NHA58892.09