Foxboro®
by Schneider Electric

9300A Series Flanged Magnetic Flowtubes
PFA Lined, 25 to 300 mm (1 to 12 in) Sizes
PTFE Lined, 15 to 400 mm (1/2 to 16 in) Sizes
Polyurethane Lined, 200 to 400 mm (8 to 16 in) Sizes

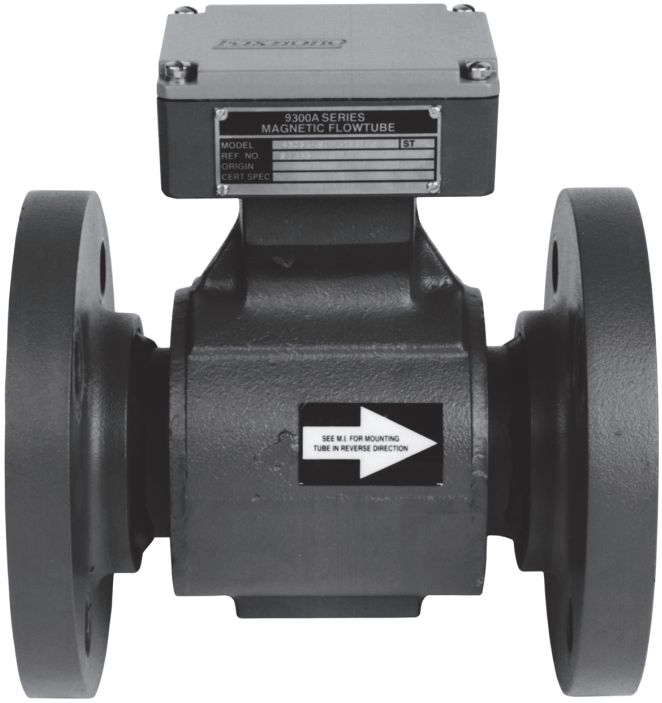

These PFA, PTFE, and polyurethane-lined compact, flanged magnetic flowtubes, together with an IMT25 Magnetic Flow Transmitter combine to form an easy-to-use versatile, dc pulsed Magnetic Flowmeter. The flowmeter measures electrically conductive liquids and produces a measurement signal directly proportional to volumetric flow rate. As symbolized by the CE logo marking on the product, the flowtube conforms to the applicable European Union directives.

FEATURES

- PFA withstands effects of severely corrosive and mildly abrasive fluids, has excellent blistering resistance, and can withstand the extremes of pressure and temperature.
- PTFE withstands effects of severely corrosive and mildly abrasive fluids.
- Polyurethane withstands effects of highly abrasive fluids.
- Rugged integral design ideal for installation in harsh in-plant or outdoor environments.
- Compact design with face-to-face overall lengths that meet ISO/DIS 13359.
- Proven electrode seal design withstands severe temperature cycling and high pressure surges.
- Metric PN10 to PN40, or ANSI Class 150 and 300 flanges in carbon or stainless steel.

- Transmitter can be mounted in a remote location, or integrally mounted to the flowtube.
- NEMA 4 enclosure for PTFE-lined 15 to 150 mm (1/2 to 6 in) sizes; and NEMA 4X enclosure for all other flowtube linings and sizes.
- Total/Accidental submergence housing construction offered with all Flowtubes.
- Numerous options and accessories offered, as applicable to enhance flowmeter capability; including grounding rings, cable glands, PTFE/PFA lining protectors, and electrode cleaning.
- Total Quality Management, including ISO 9001 Certification and Conformance to applicable European Community standards.
- Standard 2-Year Warranty.

RUGGED INTEGRAL DESIGN

The welded housing design of the 9300A flowtubes provides a very rugged and environmentally superior flowtube assembly that can be installed in harsh in-plant or outdoor environments. The flowtube enclosure is weatherproof, as defined by IEC IP66, and provides watertight and corrosion-resistant protection of NEMA 4X for all tubes except 15 to 150 mm (1/2 to 6 in) sizes PTFE lined, which are NEMA 4. The flowtube is also capable of total submergence when used with a remote mounted transmitter.

The permanently attached and retained PFA lined flowtube is sufficiently stable to withstand applications involving high temperatures, severe temperature cycling, strong pipeline vibration, and severe pressure cycling, including full vacuum.

The PTFE lined flowtube is more cost effective than PFA and can withstand severe corrosion and/or mild abrasion.

The polyurethane lined flowtube is also more cost effective than PFA in larger size meters, and can withstand mild corrosion and/or severe abrasion.

Refer to TI 27-71f which lists recommended liner material compatibility with over 150 common process fluids.

COMPACT FLOWTUBE

The 9300A has a compact design that provides face-to-face overall lengths in each size that conform to recommended flowtube dimensions contained in ISO/DIS 13359.

PULSED DC FLOWTUBES USED WITH REMOTE OR INTEGRALLY MOUNTED TRANSMITTERS

The 9300A Series Magnetic Flowtubes are calibrated for use with pulsed dc coil excitation. The intelligent I/A Series IMT25 Magnetic Flow Transmitter is offered for use with these flowtubes. The IMT25 may be integrally mounted to the flowtube itself, or remote mounted (on a pipe or flat surface) for distances up to 300 m (1000 ft).

FLOWTUBE CALIBRATION

All flowtubes are wet calibrated to verify their specified accuracy with traceability to the U.S. National Institute of Science and Technology (NIST).

PED QUALIFICATION

These flowtubes are PED qualified in EU applications for SEP (Standard Engineering Practice) Category 1 with Group 2 fluids (nonhazardous).

SELECTION OF FLOWTUBE SIZES, FLANGES, AND ELECTRODES

The 9300A flowtubes are offered in 15, 25, 40, 50, 80, 100, 150, 200, 250, 300, 250, and 400 mm (1/2, 1, 1-1/2, 2, 3, 4, 6, 8, 10, 12, 14, and 16 in) line sizes.

They are available with PN10 to PN40 or ANSI Class 150 and 300 flanged end connections, in carbon or stainless steel, as applicable.

Electrode material selections for PFA- and PTFE-lined flowtubes include 316 ss, Hastelloy C, Titanium, Tantalum-Tungsten, or Platinum-Iridium. Polyurethane-lined flowtubes are available with 316 ss electrodes only. Refer to TI 27-71f which lists the recommended electrode material compatibility with over 150 common process fluids.

CONICAL ELECTRODES

Conical electrodes are offered in both 316 ss and Hastelloy C with PFA- and PTFE-lined flowtubes sizes 25 to 150 mm (1 to 6 in). These are excellent selections for applications which coat conventional flush-with-lining electrodes. Conical electrodes extend into the process where the natural sweeping action of the fluid across the electrode face produces a self-cleaning action.

CE COMPLIANCE

The 9300A Series flowtubes conform to the applicable European Community Standards when used in conjunction with IMT25 Series transmitters.

FLOWEXPERTPRO™

FlowExpertPro is a program primarily used to size Foxboro flowmeters. It also ensures that the user has selected the proper flowmeter type for his application.This meter selection tool is available as a free web site to all users, without the need for registration. In addition to flowmeter selection and sizing, FlowExpertPro includes the following features:

- Incorporates a large library of the physical properties of typical process fluids.
- Displays results in tabular or graphic format.
- Allows user to save, print, or E-mail results.
- Provides reference to applicable flowmeter PSSs and other related flowmeter documentation.

The program calculates minimum and maximum flow rates, rangeability, pressure loss, and Reynolds Number, using established flow equations. It also allows for material and flange selection, and provides ANSI or metric flange recommendations for predicted flow pressure and temperature. You are invited to visit www.FlowExpertPro.com to access this program, or contact Global Customer Support for further information, and technical support.

OPERATING CONDITIONS

PFA-Lined Flanged Tubes (Remote Mounted Transmitter) (a)

Influence	Reference Operating Conditions	Normal Operating Conditions	Operating Limits
Ambient Temperature	25°C (77°F)	–40 to +70°C (–40 to +158°F)	–40 to +70°C (–40 to +158°F)
Process Temperature 25 to 150 mm (1 to 6 in)	25°C (77°F)	–40 to +180°C (–40 to +356°F)	–40 to +180°C (–40 to +356°F)
Process Temperature 200 to 400 mm (8 to 12 in)	25°C (77°F)	–40 to +120°C (–40 to +250°F)	–40 to +120°C (–40 to +250°F)
Process Pressure 25 to 150 mm (1 to 6 in)	0.528 MPa (75 psi)	Full Vacuum to 5.1 MPa at 38°C (to 740 psi at 100°F) Full Vacuum to 4.4 MPa at 180°C (to 645 psi at 356°F)	5.1 MPa at 38°C (740 psi at 100°F) 4.4 MPa at 180°C (645 psi at 356°F)
Process Pressure 200 to 400 mm (8 to 12 in)	0.528 MPa (75 psi)	Full Vacuum to 5.1 MPa at 38°C (to 740 psi at 100°F) Full Vacuum to 4.7 MPa at 120°C (to 665 psi at 250°F)	5.1 MPa at 38°C (740 psi at 100°F) 4.7 MPa at 120°C (665 psi at 250°F)

(a) Flowtube must be ordered with the correct flanges to achieve desired pressure and temperature rating. See Pressure-Temperature Limits of 9300A Flowtubes in Table 1.

PTFE-Lined Flanged Tubes (Remote Mounted Transmitter) (a)

Influence	Reference Operating Conditions	Normal Operating Conditions	Operating Limit
Ambient Temperature	25°C (77°F)	–40 to +70°C (–40 to +158°F)	–40 to +70°C (–40 to +158°F)
Process Temperature	25°C (77°F)	–40 to +180°C (–40 to +356°F)	–40 to +180°C (–40 to +356°F)
Process Pressure 25 to 150 (1/2 to 16 in)	0.525 MPa (75 psi)	No vacuum to 2.0 MPa at 38°C (to 285 psi at 100°F) No vacuum to 1.5 MPa at 180°C (to 213 psi at 356°F)	2.0 MPa at 38°C (285 psi at 100°F) 1.5 MPa at 180°C (213 psi at 356°F)

(a) Flowtube must be ordered with the correct flanges to achieve desired pressure and temperature rating. See Pressure-Temperature Limits of 9300A Flowtubes in Table 1.

OPERATING CONDITIONS

Polyurethane Lined Flanged Tubes (Remote Mounted Transmitter) (a)

Influence	Reference Operating Conditions	Normal Operating Conditions	Operating Limit
Ambient Temperature	25°C (77°F)	–29 to +70°C (–20 to +158°F)	–29 and +70°C (–20 and +158°F)
Process Temperature	25°C (77°F)	–29 to +71°C (–20 to +160°F)	–29 to +71°C (–20 to +160°F)
Process Pressure 200 to 400 mm (8 to 16 in)	0.525 MPa (75 psi)	Full Vacuum to 2.0 MPa at 38°C (to 285 psi at 100°F) Full Vacuum to 1.9 MPa at 71°C (to 270 psi at 160°F)	2.0 MPa at 38°C (285 psi at 100°F) 1.9 MPa at 71°C (270 psi at 160°F)

(a) Flowtube must be ordered with the correct flanges to achieve desired pressure and temperature rating. See Pressure-Temperature Limits of 9300A Flowtubes in Table 1.

PFA-Lined Flanged Tubes (Tube Mounted Transmitter) (a)

Influence	Reference Operating Conditions	Normal Operating Conditions	Operating Limits
Ambient Temperature	25°C (77°F)	–20°C to +55°C (–4°F to +131°F)	–30°C to +70°C (b) (–22°F to +158°F)
Process Temperature	25°C (77°F)	–40 to +120°C (–40 to +250°F)	–40 to +120°C (–40 to +250°F)
Process Pressure 25 to 300 mm (1 to 12 in)	0.525 MPa (75 psi)	Full Vacuum to 5.1 MPa at 38°C (to 740 psi at 100°F) Full Vacuum to 4.7 MPa at 120°C (to 665 psi at 250°F)	5.1 MPa at 38°C (740 psi at 100°F) 4.7 MPa at 120°C (665 psi at 250°F)

(a) Flowtube must be ordered with the correct flanges to achieve desired pressure and temperature rating. See Pressure-Temperature Limits of 9300A Flowtubes in Table 1.
(b) With the IMT25 Integral LCD Indicator (with pushbuttons) selection, the lower operating limit is -20°C (-4°F).

PTFE-Lined Flanged Tubes (Tube Mounted Transmitter) (a)

Influence	Reference Operating Conditions	Normal Operating Conditions	Operating Limit
Ambient Temperature	25°C (77°F)	–20°C to +55°C (–4°F to +131°F)	–30°C to +70°C (b) (–22°F to +158°F)
Process Temperature	25°C (77°F)	–40 to +120°C (–40 to +250°F)	–40 to +120°C (–40 to +250°F)
Process Pressure 25 to 400 (1/2 to 16 in)	0.525 MPa (75 psi)	No vacuum to 2.0 MPa at 38°C (to 285 psi at 100°F) No vacuum to 1.7 MPa at 120°C (to 245 psi at 250°F)	2.0 MPa at 38°C (285 psi at 100°F) 1.7 MPa at 120°C (245 psi at 250°F)

(a) Flowtube must be ordered with the correct flanges to achieve desired pressure and temperature rating. See Pressure-Temperature Limits of 9300A Flowtubes in Table 1.
(b) With the IMT25 Integral LCD Indicator (with pushbuttons) selection, lower operating limit is -20°C (-4°F).

Polyurethane Lined Flanged Tubes (Tube Mounted Transmitter) (a)

Influence	Reference Operating Conditions	Normal Operating Conditions	Operating Limit
Ambient Temperature	25°C (77°F)	–20°C to +55°C (–4°F to +131°F)	–30°C to +55°C (b) (–22°F to +158°F)
Process Temperature	25°C (77°F)	–20 to +71°C (–4 to +160°F)	–20 to +71°C (–4 to +160°F)
Process Pressure 200 to 400 mm (8 to 16 in)	0.525 MPa (75 psi)	Full Vacuum to 2.0 MPa at 38°C (to 285 psi at 100°F) Full Vacuum to 1.9 MPa at 71°C to (270 psi at 160°F)	2.0 MPa at 38°C (285 psi at 100°F) 1.9 MPa at 71°C (270 psi at 160°F)

a. Flowtube must be ordered with the correct flanges to achieve desired pressure and temperature rating. See Table 1.

b. With the IMT25 LCD Indicator (with pushbuttons) selection, the lower operating limit is -20°C (-4°F).

PERFORMANCE SPECIFICATIONS

(Combined Flowtube and Transmitter System Under Reference Operating Conditions)

Flowmeter System	Refer to
9300A Flowtube with Model IMT25 Transmitter (HART)	PSS 1-6F5 A

FUNCTIONAL SPECIFICATIONS

Nominal Line Sizes

15, 25, 40, 50, 80, 100, 200, 250, 300, 350, 400 mm (1/2, 1, 1-1/2, 2, 3, 4, 6, 8, 10, 12, 14, 16 in)

End Connections

ANSI and Metric PN flanges. Refer to Model Code section for flange types and ratings available.

Process Pressure and Temperature Limits

Refer to Table 1.

Minimum and Maximum Upper Range Flow Rates and Velocities

See Table 2. In this table, the minimum upper range value (URV) is not the lowest flow rate that the flowtube can measure; it is the lowest flow rate which can correspond to the 20 mA signal. For example: for the 25 mm (1 in) flowtube, the minimum range is 0 to 3.5 U.S. gpm, and this generates 4 to 20 mA.

Process Fluid Conductivity and Signal Cable Length

The maximum allowable cable length is a function of the cable type, process fluid conductivity, and whether the cables are in the same or separate conduits. Standard system accuracy is maintained when the installations are in accordance with the requirements specified in Table 4.

Installation Requirements

Flowtube must be mounted so the electrodes are not in a vertical plane, the minimum upstream straight pipe length recommended is five pipe diameters, and the minimum downstream straight pipe length is three diameters. The pipe length is measured outward from the center of the flowtube. During measurement, the flowtube must remain full with the process fluid to achieve the stated performance. Installation in a vertical pipe with flow going upward is ideal.

Flowtube Replacement

For installations presently with 8300 Series flowtubes, the 9300A Series can be used as a direct replacement. However, because of the shorter face-to-face dimensions of the 9300A flowtubes, a spool piece or equivalent spacer is required when replacing an 8300 with a 9300A flowtube. See Table 3.

Table 1. Pressure-Temperature Limits of 9300A Flowtubes

Flange Rating	Liners (a)	Maximum Permissible Operating Pressure at Process Temperature Listed (b)							
		316 ss Stainless Steel				Carbon Steel (ASME/ANSI Group No. 1.1)			
DIN		–40°C	50°C	100°C	180°C	–28°C (c)	50°C	100°C	180°C
PN10	A,P,T	9.0 bar	9.0 bar	7.8 bar	7.1 bar	10.0 bar	10.0 bar	10.0 bar	8.4 bar
PN16	P	14.2 bar	14.2 bar	12.5 bar	11.5 bar	16.0 bar	16.0 bar	16.0 bar	15.3 bar
PN25	A,P,T	22.3 bar	22.3 bar	19.5 bar	17.9 bar	25.0 bar	25.0 bar	25.0 bar	20.2 bar
PN40	P	37.4 bar	37.4 bar	31.2 bar	28.6 bar	40.0 bar	40.0 bar	40.0 bar	38.3 bar
ANSI		–40°F	100°F	200°F	356°F	–20°F (c)	100°F	200°F	356°F
Class 150	A,P,T	275 psig	275 psig	240 psig	205 psig	285 psig	285 psig	260 psig	213 psig
Class 300	P	720 psig	720 psig	620 psig	538 psig	740 psig	740 psig	675 psig	644 psig

a. A = Polyurethane sizes 200 to 400 mm (8 to 16 in); temperature limits are -29 to +71°C (-20 to +160°F).
P = PFA sizes 25 to 300 mm (1 to 12 in); temperature limits are:
sizes 25 to 300 mm (1 to 6 in) -40 to +180°C (-40 to +356°F);
sizes 25 to 150 mm (8 to 12 in) -40 to +120°C (-40 to +250°F).
T = PTFE sizes 15 to 400 mm (0.5 to 16 in); temperature limits are -40 to +180°C (-40 to +356°F).

b. For process temperatures >120°C (>250°F), the transmitter must be remotely mounted in a remote location.

c. For process temperatures < -28°C (-20°F), stainless steel flanges must be used.

Table 2. Minimum and Maximum Upper Range Values

Nominal Line Size		Nominal Tube I.D.		Flange Selection (a)	Liner Selection (a)	Flow Rate Minimum and Maximum URV	
mm	in	mm	in			L/min (a)	U.S. gpm (b)
15	1/2	12.2	.48	--	PTFE	3.8 and 76	1.0 and 20
25	1	22.1	.87	--	PFA/PTFE	13.2 and 265	3.5 and 70
40	1-1/2	37.1	1.46	--	PFA/PTFE	34.1 and 644	9.0 and 170
50	2	45	1.77	--	PFA/PTFE	49 and 946	13 and 250
80	3	70.6	2.78	--	PFA/PTFE	117 and 2,366	31 and 625
100	4	93	3.66	--	PFA/PTFE	208 and 4,164	55 and 1,100
150	6	138.7	5.46	--	PFA/PTFE	462 and 9,236	122 and 2,440
200	8	206	8.11	BA, BB, ZD, ZE, ZL, ZM	PFA	1,003 and 20,060	265 and 5,300
		197	7.76	BC, BD, ZF, ZG, ZN, ZP	PFA	927 and 18,546	245 and 4,900
		202	7.95	--	PTFE	965 and 19,303	255 and 5,100
		193	7.59	--	poly	890 and 17,790	235 and 4,700
250	10	259	10.21	BA, BB, ZD, ZE, ZL, ZM	PFA	1,590 and 31,794	420 and 8,400
		249	9.81	BC, BD, ZF, ZG, ZN, ZP	PFA	1,476 and 29,523	390 and 7,800
		255	10.05	--	PTFE	1,552 and 31,037	410 and 8,200
		246	9.69	--	poly	1,438 and 28,766	380 and 7,600

Table 2. Minimum and Maximum Upper Range Values (Continued)

Nominal Line Size		Nominal Tube I.D.		Flange Selection (a)	Liner Selection (a)	Flow Rate Minimum and Maximum URV	
mm	in	mm	in			L/min (a)	U.S. gpm (b)
300	12	309	12.18	BA, BB, ZD, ZE, ZL, ZM	PFA	2,270 and 45,420	600 and 12,000
		299	11.79	BC, BD, ZF, ZG, ZN, ZP	PFA	2,120 and 42,392	560 and 11,200
		305	12.02	--	PTFE	2,215 and 44,285	585 and 11,700
		296	11.66	--	poly	2,082 and 41,635	550 and 11,000
350	14	341	13.42	--	PTFE	2,763 and 55,261	730 and 14,600
		328	12.90	--	poly	2,555 and 51,098	675 and 13,500
400	16	392	15.42	--	PTFE	3,634 and 72,672	960 and 19,200
		378	14.90	--	poly	3,407 and 68,130	900 and 18,000

a. Refer to Model Code for flange and liner selection available with each flowtube size.

b. Flow rates for minimum and maximum upper range values (URVs) correspond to process flow velocities of approximately 1.64 ft/s (0.5 m/s) and 33 ft/s (10 m/s).

Table 3. Face-to-Face Dimensions, 9300A vs. 8300 Series Flowtubes, and Spool Length

Nominal Line Size		Face-to-Face Dimensions					
		9300A, PFA/PTFE Lining		8300, PTFE Lining		Spool Length	
mm	in	mm	in	mm	in	mm	in
15	1/2	200	7.87	365	14.4	165	6.5
25	1	200	7.87	365	14.4	165	6.5
40	1-1/2	200	7.87	365	14.4	165	6.5
50	2	200	7.87	365	14.4	165	6.5
80	3	200	7.87	418	16.4	218	8.6
100	4	250	9.84	418	16.4	168	6.6
150	6	300	11.81	522	20.6	222	8.7
200	8	350	13.8	624	24.6	274	10.8
250	10	450	17.7	726	28.6	277	10.9
300	12	500	19.7	828	32.6	329	12.9
350	14	550	21.7	724	28.5	173	6.8
400	16	600	23.6	775	30.5	175	6.9

Table 4. Process Fluid Conductivity and Cabling (a)

Maximum Cable Length	Minimum Fluid Conductivity	Signal and Coil Drive Cables
300 m (1000 ft)	5 μS/cm	Signal and coil drive cables in separate conduit. Signal Cable to be Part No. R0101ZS (feet) or B4017TE (meters).
225 m (700 ft)	5 μS/cm	Signal and coil drive cables in same conduit. Signal Cable to be Part No. R0101ZS (feet) or B4017TE (meters).
150 m (500 ft)	20 μS/cm	Signal cable may be in same conduit as coil drive cable. Signal cable to be good quality twisted shielded pair, preferable no smaller than 1.0 mm^2 (or 18 AWG) for mechanical considerations (Belden 8760 or 9318, Alpha 5610/1801 or 5611/1801, or equivalent).

a. Values in table are fluid conductivity minimums, and maximum distance between transmitter and flowtube. Refer to TI 027-072 for conductivities of various process liquids.

ELECTRICAL SAFETY SPECIFICATIONS

Testing Laboratory, Types of Protection, and Area Classification	Application Conditions	Electrical Safety Design Code
CSA for use in Class I, Division 2, Groups A, B, C, and D; Class II, Division 2, Groups F and G; Class III, Division 2 hazardous locations.	Temperature Class T6.	L
FM nonincendive Class I, Division 2, Groups A, B, C, and D; suitable for Class II and III, Division 2, Groups F and G hazardous locations.	Temperature Class T6. Ta=70°C. For use on non-hazardous process only.	N
No Certification	—	Z

PHYSICAL SPECIFICATIONS

HOUSING CONSTRUCTION

These flowtubes are offered with a selection of the following housing construction: a Weatherproof construction housing and a Total/Accidental Submergence housing. See paragraphs below.

Weatherproof Housing

This housing is designed for harsh in-plant or outdoor environments. The 15 to 150 mm (1/2 to 6 in) PTFE-lined flowtubes are NEMA 4, and all other flowtubes are NEMA 4X. Select Housing Code -G if with a remote mounted transmitter; and select Housing Code -I if with an integrally mounted transmitter.

Total/Accidental Submergence Housing

Only offered when transmitter is mounted in a remote location. The weatherproof flowtube housing is factory sealed for accidental or continuous operation under water up to a maximum depth of 9 m (30 ft). A field kit is provided to the customer for final sealing after site installation. Select Housing Code -N.

Flowtube Material

15 mm (1/2 in) SIZE

Cast 304 ss (CF8) or 305 ss, exceeds Schedule 10 wall thickness

25 to 150 mm (1 to 6 in) sizes

Cast 304 ss (CF8) or 305 ss, exceeds Schedule 40 wall thickness

200 to 400 mm (8 to 16 in) sizes

304 ss Schedule 10 or 40 wall thickness

Flowtube Housing Material

15 to 150 mm (1/2 to 6 in) - Ductile Iron

Finish provides the environmental and corrosion resistant requirements of NEMA 4X (PFA lined) or NEMA 4 (PTFE lined).

200 to 900 mm (8 to 16 in) - CARBON STEEL

Carbon steel housing. Finish provides the environmental and corrosion resistant requirements of NEMA 4X.

Liner Material

PFA, PTFE, or polyurethane. Designed to be permanently retained within flowtube without slipping, rotating, collapsing, or other movement.

See Model Codes section for availability.

Electrode Materials

Tantalum-Tungsten, Hastelloy C, Platinum-Iridium, 316L ss, or Titanium, as specified. The Hastelloy C and 316L ss electrodes are also available in a conical configuration. Polyurethane-lined tubes are available with 316L ss electrodes only.

Junction Box Materials (Integral to Flowtube)

Cast aluminum housing mounted and sealed to top surface of flowtube with cork-silicon rubber gasket.

The junction box cover is sealed to junction box with silicone sponge rubber gasket.

Flanges

ANSI Class 150, 300; or Metric PN10, PN16, PN25, and PN40, in either carbon steel or 316 ss.

Flange Gaskets

Provided by user.

Mounting Position

Flowtube can be mounted in any orientation only if it remains full of fluid, and the electrodes are not in a vertical plane. Installation in a vertical line with flow going up is ideal. Recommended straight run of pipe is five pipe diameters upstream and three pipe diameter downstream.

Electrical Connections

With Remote-Mounted Transmitter

Junction box on top surface of flowtube provides for signal, power, and fluid ground connections. Holes tapped for 1/2 NPT conduit, or optional cable glands for nonconduit applications. Simply remove junction box cover to access wiring. All unused conduit holes must be plugged to maintain the electrical and environmental integrity of the transmitter.

With Integrally-Mounted Transmitter

Transmitter mounted to top surface of flowtube. All field wiring is connected to the transmitter. Refer to transmitter documents.

Approximate Mass - Flowtube with ANSI Class 150 Flanges (a)

Nominal Line Size		Approximate Mass		Nominal Line Size		Approximate Mass	
mm	in	kg	lb	mm	in	kg	lb
15	1/2	2.8	6.2	150	6	34	75
25	1	5.1	11.3	200	8	47.6	105
40	1 1/2	8.0	17.5	250	10	65.3	144
50	2	10.5	23.2	300	12	90.7	200
80	3	14.2	31.3	350	14	128	283
100	4	22.7	50	400	16	154	339

a. Add applicable transmitter mass when transmitter is mounted to flowtube.

OPTIONAL SELECTIONS AND ACCESSORIES

Option -G: Cable Glands

Used to provide rain tight, strain relieved entrance for 6.8 to 12.2 mm (0.27 to 0.48 in) diameter cable. External 1/2 NPT threads into internal 1/2 NPT thread on flowtube junction box surface. Body and seal nut are nylon, and compression gland is neoprene. Select Model Code Option -G.

Grounding (Protective) Rings

Two grounding rings are required, one on each end of the flowtube, if mating piping is lined or nonmetallic. For 316 ss grounding rings, see table below. Not available with 9308A to 9316A flowtubes.

316 ss Grounding Rings

Line Size		Ring Thickness		Part Number (a)	
mm	in	mm	in	PFA Liner	PTFE Liner
15	1/2	3.2	0.125	L0118SB	A0129PD
25	1	3.2	0.125	L0118SC	A0129NA
40	1 1/2	3.2	0.125	L0118SD	A0129NB
50	2	3.2	0.125	L0118SE	A0129NC
80	3	3.2	0.125	A0129NE	A0129NE
100	4	3.2	0.125	A0129NF	A0129NF
150	6	3.2	0.125	A0129NK	A0129NK

(a) Part number represents 1 grounding ring.

NOTE

For Hastelloy C, Monel, Tantalum, or Titanium grounding rings, contact Global Customer Support.

Option -E: Grounding Electrode

For 9308A to 9316A flowtubes only. The grounding electrode is a third electrode added to the flowtube, as an alternative to grounding rings, if mating pipe is nonmetallic or lined. Grounding electrode is the same material as the electrode specified for the flowtube. Select Model Code Option -E.

Signal Cable

Two-core (two-conductor), multiscreened (multishielded) cable with two driven screens (shields). Maximum length is 300 m (1000 ft). Specify Part Number R0101ZS and length required in feet, or Part Number B4017TE and length required in meters. Unless otherwise specified, a minimum continuous length of 75 m or 250 ft shall be supplied.

Low Voltage Electronic Cleaning Assembly (Voltage Boil-Off Procedure)

The low voltage electrode cleaning assembly provides a convenient means of applying a low voltage to the electrodes, while simultaneously protecting the transmitter by short-circuiting the signal input. This procedure removes sludge or film deposits from the electrodes. Offered for indoor use only and not to be used in “hose down” applications. Supply voltage is 120 V ac, 50 to 60 Hz. Flowtube must be in an ordinary location. Specify Part No. D0128JW.

MODEL CODE - PFA-LINED FLOWTUBES

Description	Code
Nominal Flowtube Size	
25 mm (1 in) Line Size, Flanged	9301A
40 mm (1 1/2 in) Line Size, Flanged	931HA
50 mm (2 in) Line Size, Flanged	9302A
80 mm (3 in) Line Size, Flanged	9303A
100 mm (4 in) Line Size, Flanged	9304A
150 mm (6 in) Line Size, Flanged	9306A
200 mm (8 in) Line Size, Flanged	9308A
250 mm (10 in) Line Size, Flanged	9310A
300 mm (12 in) Line Size, Flanged	9312A
Tube Construction	
AISI Type 304 or 305 ss; Face-to-Face Dimensions Conform to ISO/DIS 13359	–SI
End Connections	
ANSI Class 150 Carbon Steel Flange	BA
ANSI Class 150, 316 ss Flange	BB
ANSI Class 300 Carbon Steel Flange	BD
ANSI Class 300, 316 ss Flange	BC
Metric PN 10 Carbon Steel Flange (a)	ZD
Metric PN 16 Carbon Steel Flange (a)	ZE
Metric PN 25 Carbon Steel Flange (a)	ZF
Metric PN 40 Carbon Steel Flange (a)	ZG
Metric PN 10, 316 ss Flange (a)	ZL
Metric PN 16, 316 ss Flange (a)	ZM
Metric PN 25, 316 ss Flange (a)	ZN
Metric PN 40, 316 ss Flange (a)	ZP
Lining Material	
PFA	–P

MODEL CODE - PFA-LINED FLOWTUBES (CONTINUED)

Description	Code
Electrodes	
Tantalum-Tungsten	B
Conical 316L ss (9301A through 9306A only)	C
Hastelloy C	H
Conical Hastelloy C (9301A through 9306A only)	K
Platinum-Iridium	P
316L ss	S
Titanium	T
Coil Drive/Supply	
Pulsed dc	J
Housing Construction/Transmitter Mounting	
NEMA 4X Housing Construction; Remote-Mounted Transmitter	–G
Total/Accidental Submergence Housing, Remote-Mounted Transmitter (b)	–N
NEMA 4X Housing, Integrally Mounted to IMT25 Transmitter	–I
Electrical Safety (Also see Electrical Safety Specifications section)	
CSA, Class I, II, and III; Division 2	L
FM, nonincendive, Class I, II, and III; Division 2	N
No Testing Laboratory Certification or Approval Required	Z
Optional Selections	
Cable Glands for Nonconduit Applications (c)	–G
Grounding Electrode (9308A-9312A only) (d)	–E
PTFE Lining Protector (a)	–T

a. Optional Selection -T not available with metric End Connections.

b. Sealed for accidental or continuous operation under water up to 9 m (30 ft) deep. Supplied with a field kit for sealing after installation.

c. The cable glands (-G option) provide a sealed cable entry for field wiring to the flowtube junction box, and are generally specified in nonconduit applications. For flowtubes with integrally-mounted transmitters (-I Housing), cable glands may be specified with the transmitter options (not for Electrical Safety Codes -L and -N).

d. The -E option is supplied in same material as selected for electrodes. This option is used in lieu of grounding rings.

MODEL CODE - PTFE-LINED FLOWTUBES

Description	Code
Nominal Flowtube Size	
15 mm (1/2 in) Line Size, Flanged	930HA
25 mm (1 in) Line Size, Flanged	9301A
40 mm (1 1/2 in) Line Size, Flanged	931HA
50 mm (2 in) Line Size, Flanged	9302A
80 mm (3 in) Line Size, Flanged	9303A
100 mm (4 in) Line Size, Flanged	9304A
150 mm (6 in) Line Size, Flanged	9306A
200 mm (8 in) Line Size, Flanged	9308A
250 mm (10 in) Line Size, Flanged	9310A
300 mm (12 in) Line Size, Flanged	9312A
350 mm (14 in) Line Size, Flanged	9314A
400 mm (16 in) Line Size, Flanged	9316A
Tube Construction	
AISI Type 304 or 305 ss; Face-to-Face Dimensions Conform to ISO/DIS 13359	–SI
End Connections	
ANSI Class 150 Carbon Steel Flange	BA
ANSI Class 150, 316 ss Flange	BB
Metric PN 10 Carbon Steel Flange (a)	ZD
Metric PN 16 Carbon Steel Flange (a)	ZE
Metric PN 10, 316 ss Flange (a)	ZL
Metric PN 16, 316 ss Flange (a)	ZM
Lining Material	
PTFE (polytetrafluoroethylene)	–T
Electrodes	
Tantalum-Tungsten	B
Conical 316L ss (9301A through 9306A only)	C
Hastelloy C	H
Conical Hastelloy C (9301A through 9306A only)	K
Platinum-Iridium	P
316L ss	S
Titanium	T
Coil Drive/Supply	
Pulsed dc	J
Housing Construction/Transmitter Mounting	
NEMA 4/NEMA 4X Construction; Remote-Mounted Transmitter (b)	–G
Total/Accidental Submergence Housing; Remote-Mounted Transmitter (c)	–N
NEMA 4/NEMA 4X Construction; Integrally Mounted to IMT25 Transmitter (b)	–I
Electrical Safety (Also see Electrical Safety Specifications section)	
CSA, Class I, II, III; Division 2	L
FM, nonincendive, Class I, II, III; Division 2	N
No Testing Laboratory Certification or Approval Required	Z
Optional Selections	
Cable Glands for Nonconduit Applications (d)	–G
Grounding Electrode (9308A-9316A only) (e)	–E
PTFE Lining Protector (a)	–T

a. Optional Selection -T not available with metric End Connections.

b. NEMA 4 housing for 930HA to 9306A sizes; and NEMA 4X housing for 9308A to 9316A sizes.

c. Sealed for accidental or continuous operation under water up to 9 m (30 ft) deep. Supplied with a field kit for sealing after installation.

d. The cable glands (-G option) provide a sealed cable entry for field wiring to the flowtube junction box, and are generally specified in nonconduit applications. For flowtubes with integrally-mounted transmitters (-I Housing), cable glands may be specified with the transmitter options (not for Electrical Safety Codes L and N).

e. The -E option is supplied in same material as selected for electrodes. This option is used in lieu of grounding rings.

MODEL CODE - POLYURETHANE-LINED FLOWTUBES

Description	Model
Nominal Flowtube Size	
200 mm (8 in) Line Size, Flanged	9308A
250 mm (10 in) Line Size, Flanged	9310A
300 mm (12 in) Line Size, Flanged	9312A
350 mm (14 in) Line Size, Flanged	9314A
400 mm (16 in) Line Size, Flanged	9316A
Tube Construction	
AISI Type 304 or 305 ss; Face-to-Face Dimensions Conform to ISO/DIS 13359	–SI
End Connections	
ANSI Class 150 Carbon Steel Flange	BA
ANSI Class 150, 316 ss Flange	BB
Metric PN 10 Carbon Steel Flange	ZD
Metric PN 16 Carbon Steel Flange	ZE
Metric PN 10, 316 ss Flange	ZL
Metric PN 16, 316 ss Flange	ZM
Lining Material	
Polyurethane	–A
Electrodes	
316L ss	S
Coil Drive/Supply	
Pulsed dc	J
Housing Construction/Transmitter Mounting	
NEMA 4X Housing Construction; Remote-Mounted Transmitter	–G
Total/Accidental Submergence Housing; Remote-Mounted Transmitter (a)	–N
NEMA 4X Housing; Integrally Mounted to IMT25 Transmitter	–I
Electrical Safety (Also see Electrical Safety Specifications section)	
CSA, Class I, II, and III; Division 2	L
FM, nonincendive, Class I, II, and III; Division 2	N
No Testing Laboratory Certification or Approval Required	Z
Optional Selection	
Cable Glands for Nonconduit Applications (b)	–G
Grounding Electrode (c)	–E

a. Sealed for accidental or continuous operation under water up to 9 m (30 ft) deep. Supplied with a field kit for sealing after installation.

b. The cable glands (-G option) provide a sealed cable entry for field wiring to the flowtube junction box, and are generally specified in nonconduit applications. For flowtubes with integrally-mounted transmitters (-I Housing), cable glands may be specified with the transmitter options (not for Electrical Safety Codes L and N).

c. The -E option is supplied in same material as selected for electrodes. This option is used in lieu of grounding rings.

DIMENSIONS-NOMINAL

930HA TO 931HA FLANGED FLOWTUBES USED WITH REMOTE-MOUNTED TRANSMITTERS

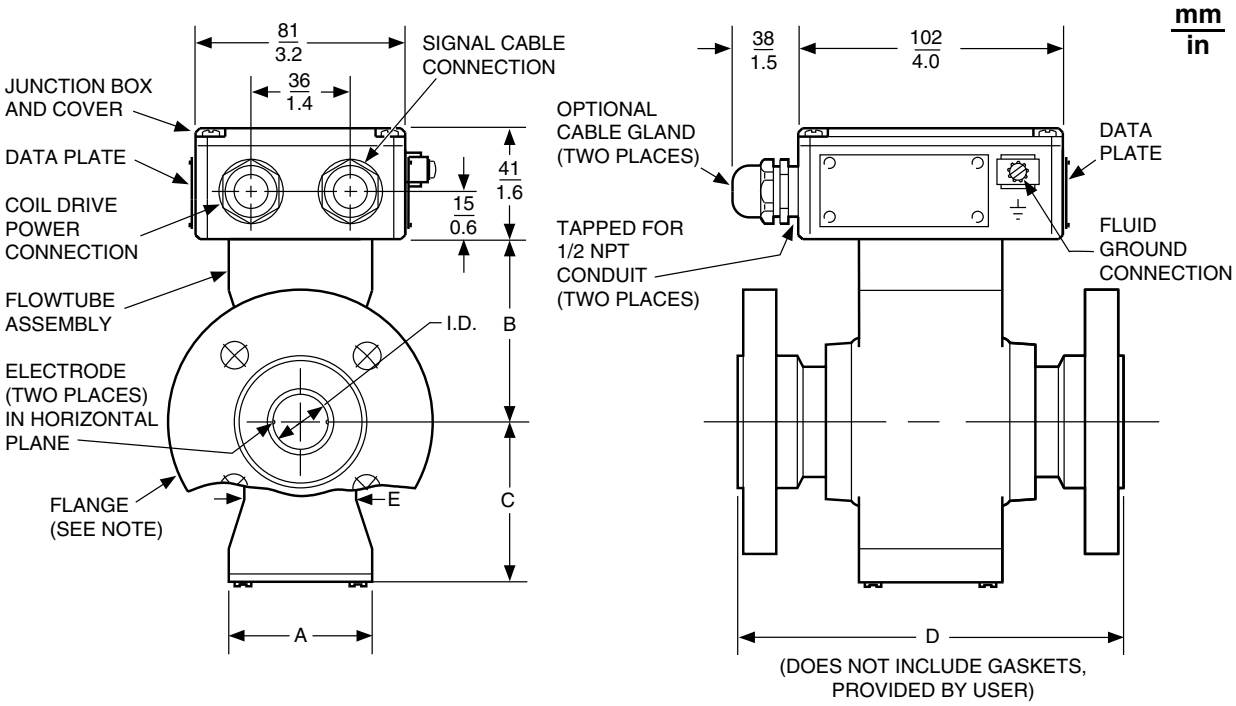

NOTE: Flowtube mounts between the following pipeline flanges: Metric PN 10, PN 16, PN 25, and PN 40; and ANSI Classes 150 and 300.

Flowtube Model	Nominal Line Size		Actual Flowtube I.D.	Dimensions				
				A	B	C	D (a)	E
930HA	15 mm	1/2 in	12.19 / 0.480	53 / 2.1	61 / 2.4	58 / 2.3	200 / 7.87	28 / 1.1
9301A	25 mm	1 in	22.10 / 0.870	53 / 2.1	69 / 2.7	66 / 2.6	200 / 7.87	41 / 1.6
931HA	40 mm	1 1/2 in	37.08 / 1.46	53 / 2.1	84 / 3.3	76 / 3.0	200 / 7.87	53 / 2.1

a. D length increases by approximately 25 mm (1 inch) when flowtube has optional lining protection (Suffix -T). For PTFE-lined flowtubes, Dimension D applies only when end flanges are clamped in place.

9302A TO 9306A FLANGED FLOWTUBES USED WITH REMOTE-MOUNTED TRANSMITTERS

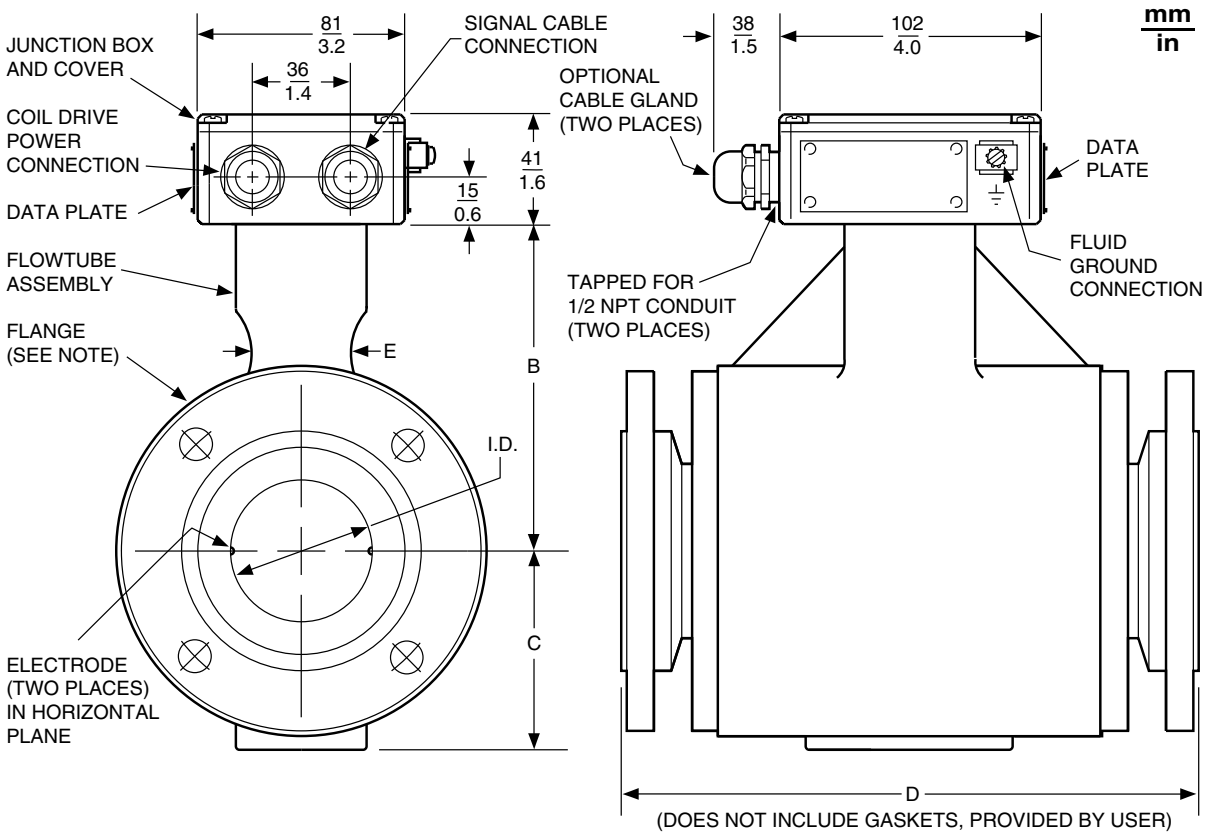

NOTE: Flowtube mounts between the following pipeline flanges: Metric PN 10, PN 16, PN 25, and PN 40; and ANSI Classes 150 and 300.

Flowtube Model	Nominal Line Size		Actual Flowtube I.D.	Dimensions			
				B	C	D (a)	E
9302A	50 mm	2 in	45.6 / 1.77	91 / 3.6	61 / 2.4	200 / 7.87	28 / 1.1
9303A	80 mm	3 in	70.6 / 2.78	107 / 4.2	76 / 3.0	200 / 7.87	41 / 1.6
9304A	100 mm	4 in	93.0 / 3.66	135 / 5.3	89 / 3.5	250 / 9.84	41 / 1.6
9306A	150 mm	6 in	138.7 / 5.46	165 / 6.5	114 / 4.5	300 / 11.81	48 / 1.9

a. D length increases by approximately 25 mm (1 inch) when flowtube has optional lining protection (Suffix -T). For PTFE-lined flowtubes, Dimension D applies only when end flanges are clamped in place.

930HA TO 9306A FLANGED FLOWTUBES USED WITH
IMT25 SERIES FLOWTUBE-MOUNTED TRANSMITTERS

mm
in

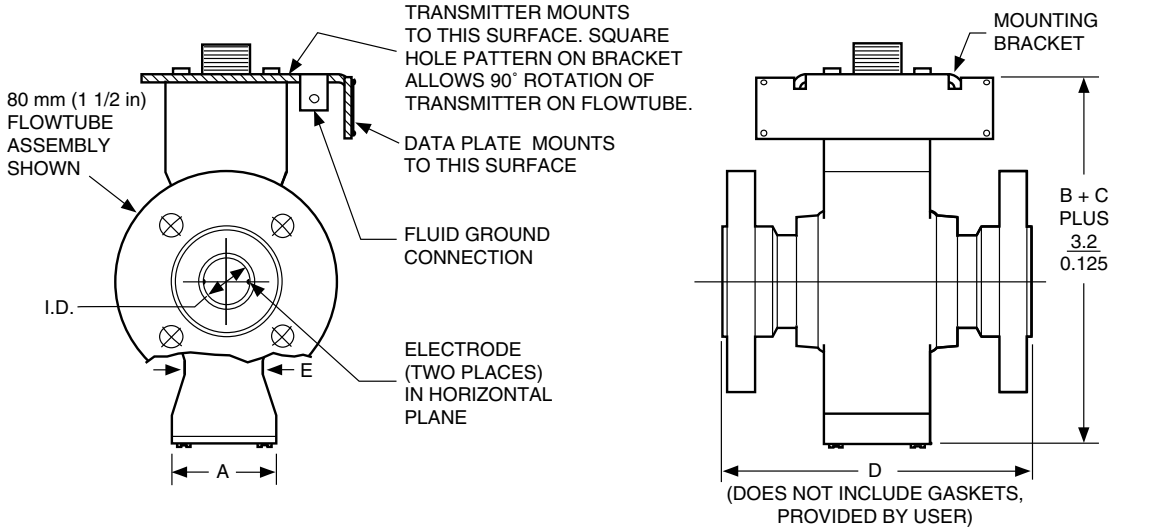

NOTE: SEE PREVIOUS PAGES FOR FLOWTUBE DIMENSIONS.

9308A TO 9316A FLANGED FLOWTUBES USED WITH REMOTE-MOUNTED TRANSMITTERS

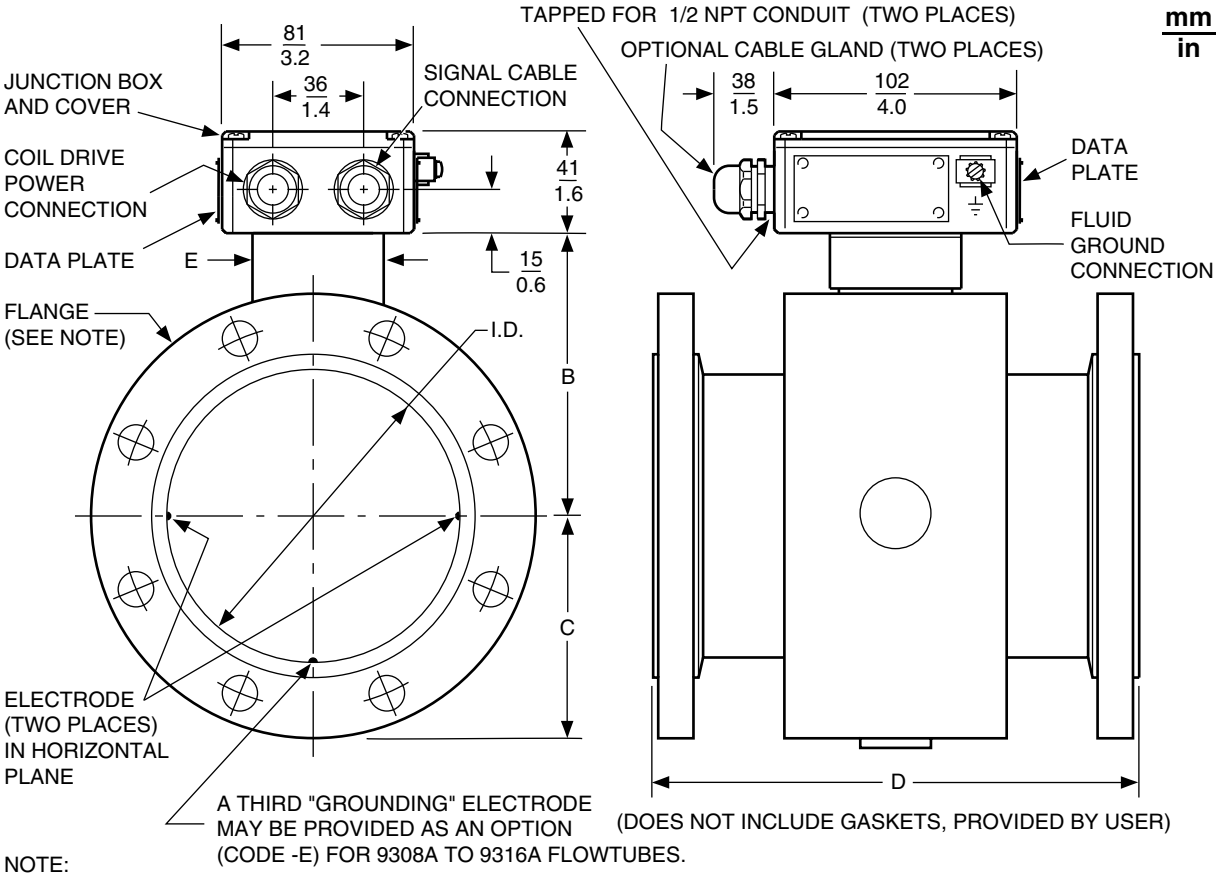

NOTE:

SEE NEXT PAGE FOR DIMENSIONS "B" THROUGH "E".

Flowtube Model	Nominal Line Size	Liner	Actual Flowtube I.D.		Nom. Dim. B	Nominal Dimension C						Nom. Dim. D (a)	Nom. Dim. E
						(ANSI Class)		(Metric PN)					
			Sch. 10	Sch. 40		(150)	(300)	(10)	(16)	(25)	(40)		
9308A	200 mm 8 in	PFA	206 8.11	197 7.76	187 7.4	171 6.7	191 7.5	169 6.7	169 6.7	180 7.1	187 7.4	350 13.8	72 2.8
		PTFE	202 7.95	N/A									
		poly	193 7.59	N/A									
9310A	250 mm 10 in	PFA	259 10.21	2.49 9.81	214 8.4	202 8.0	222 8.8	197 7.8	202 7.9	213 8.4	225 8.9	450 17.7	72 2.8
		PTFE	255 10.05	N/A									
		poly	246 9.69	N/A									
9312A	300 mm 12 in	PFA	309 12.18	299 11.79	239 9.4	241 9.5	260 10.3	222 8.7	229 9.0	243 9.6	258 10.1	500 19.7	72 2.8
		PTFE	305 12.02	N/A									
		poly	296 11.66	N/A									
9314A	350 mm 14 in	PTFE	341 13.42	N/A	255 10.0	266 10.5	N/A	252 9.9	259 10.2	N/A	N/A	550 21.7	72 2.8
		poly	328 12.90	N/A									
9316A	400 mm 16 in	PTFE	392 15.42	N/A	280 11.0	298 11.7	N/A	282 11.1	289 11.4	N/A	N/A	600 23.6	72 2.8
		poly	378 14.90	N/A									

a. D length increases by approximately 25 mm (1 in) when flowtube has optional lining protector optional suffix -T). For PTFE-lined flowtubes, dimension D applies only when end flanges are clamped in place.

9308A TO 9316A FLANGED FLOWTUBES USED WITH
IMT25 SERIES FLOWTUBE-MOUNTED TRANSMITTERS

mm
in

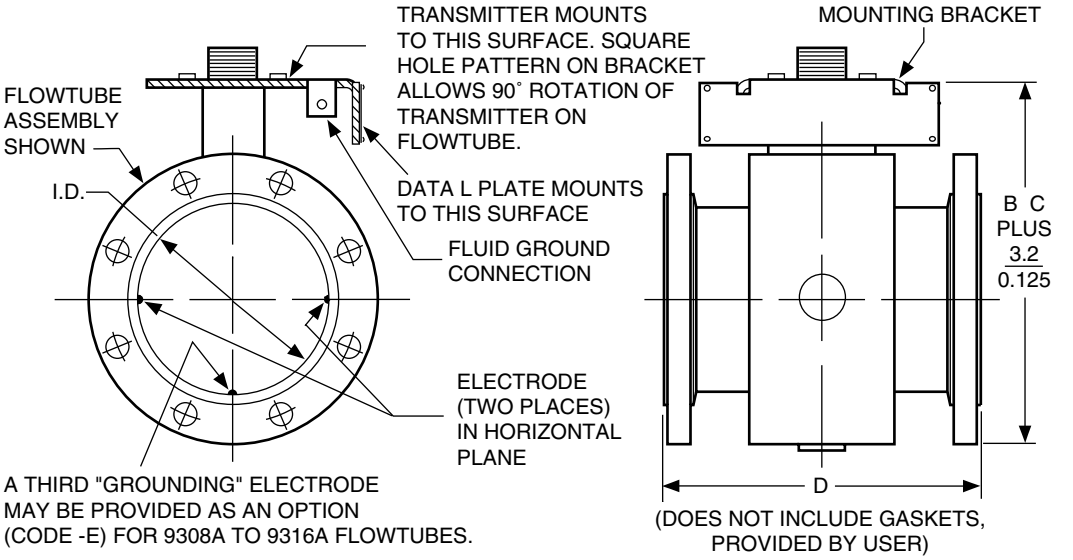

NOTE: SEE PREVIOUS PAGES FOR FLOWTUBE DIMENSIONS.

ORDERING INSTRUCTIONS

1 Model Number.

2 Flow Rate and Engineering Units. Value Specified must be within Minimum and Maximum Values listed in Table 1.

3 Process Pressure-Temperature Range. Specify Minimal, Nominal, and Maximum Values.

4 Process Composition and Conductivity.

5 Grounding Rings (if Mating Piping is Nonmetallic or Lined Metallic Piping), if needed.

6 Other Options or Accessories not Listed in Model Number.

7 User Tag Data.

FLOWEXPERTPRO SIZING APPLICATION

FlowExpertPro.com

Mobile application

OTHER FOXBORO PRODUCTS

The Foxboro product lines offer a broad range of measurement and instrument products, including solutions for pressure, flow, analytical, temperature, positioning, controlling, and recording. For a list of these offerings, visit our web site at:

www.schneider-electric.com

Foxboro®
by Schneider Electric

Invensys Systems, Inc.
38 Neponset Avenue
Foxboro, MA 02035
United States of America
http://www.schneider-electric.com

Global Customer Support
Inside U.S.: 1-866-746-6477
Outside U.S.: 1-508-549-2424
Website: http://support.ips.invensys.com

Copyright 1995-2016 Invensys Systems, Inc.
All rights reserved.

Invensys, Foxboro, I/A Series, and FlowExpertPro are trademarks of Invensys Limited, its subsidiaries, and affiliates. All other trademarks are the property of their respective owners.

Invensys is now part of Schneider Electric.