Temperature

Model RTT80 Temperature Transmitter with HART® 7 and Optional SIL Certification

Product Specification

PSS 2A-1F8 A, Rev M

July 2025



https://www.se.com

Legal Information

The information provided in this document contains general descriptions, technical characteristics and/or recommendations related to products/solutions.

This document is not intended as a substitute for a detailed study or operational and site-specific development or schematic plan. It is not to be used for determining suitability or reliability of the products/solutions for specific user applications. It is the duty of any such user to perform or have any professional expert of its choice (integrator, specifier or the like) perform the appropriate and comprehensive risk analysis, evaluation and testing of the products/solutions with respect to the relevant specific application or use thereof.

The Schneider Electric brand and any trademarks of Schneider Electric SE and its subsidiaries referred to in this document are the property of Schneider Electric SE or its subsidiaries. All other brands may be trademarks of their respective owner.

This document and its content are protected under applicable copyright laws and provided for informative use only. No part of this document may be reproduced or transmitted in any form or by any means (electronic, mechanical, photocopying, recording, or otherwise), for any purpose, without the prior written permission of Schneider Electric.

Schneider Electric does not grant any right or license for commercial use of the document or its content, except for a non-exclusive and personal license to consult it on an "as is" basis.

Schneider Electric reserves the right to make changes or updates with respect to or in the content of this document or the format thereof, at any time without notice.

To the extent permitted by applicable law, no responsibility or liability is assumed by Schneider Electric and its subsidiaries for any errors or omissions in the informational content of this document, as well as any non-intended use or misuse of the content thereof.

Overview

The Model RTT80 Temperature Transmitter is a microprocessor-based temperature transmitter with HART® communication protocol. It receives input signals from thermocouples, RTDs, ohm, or millivolt sources.

Features

- Supports long term stability from microprocessor-based technology
- Registration to HART Protocol Revision 7 (HART 7) digital communications is standard
- Available with or without SIL certification
- One unit configurable for a variety of Thermocouple (TC) and Resistance Temperature Detector (RTD) inputs
- Supports 2-, 3-, or 4-wire RTDs
- Allows average or difference measurement
- Automatic sensor backup - a second sensor starts measuring temperature if the primary sensor is not functioning correctly
- Temperature-dependent switching between sensors used in different measuring ranges
- Drift warning message or alarm if the deviation between sensor 1 and sensor 2 is less than or greater than a predefined limit value
- Thermocouple cold junction compensation
- Galvanic isolation 2 kV input to output
- Rich on-board diagnostics
- Optional digital indicator
- Available as a basic module that can mount to a surface or DIN rail, or with an explosion-proof dual compartment housing for remote mounting, and integral sensor and thermowell mounting
- Available with a wide selection of sensors and thermowells
- Configurable Failsafe mA value
- Maximum/minimum temperature logging
- Conforms to applicable European Union Directives (product marked with “CE” logo)
- Electromagnetic compatibility in accordance with all relevant requirements of EN 61326 and NAMUR NE21
- Meets many testing agency requirements for hazardous area installations
- Standard two-year warranty

General Description

The RTT80 provides a wide range of packaging selections, sensor types, and options along with HART communication protocol, thus making this transmitter suitable for most temperature measurement applications. The microprocessor- based electronics minimizes ambient temperature effects and results in high accuracy, repeatability, and linearization of the sensor signal.

Intelligent Temperature Transmitter Family

The RTT80 is part of the intelligent temperature transmitter family, which also includes Model RTT15. The RTT80 is also offered with the FOUNDATION Fieldbus™ communication protocol; see PSS 2A-1F8 B.

SIL Certification

Versions of the RTT80 are available both with and without SIL certification per IEC 61508:2010. For the SIL version, -S2 should be selected in the options field of the model code. The SIL version can be operated in either Normal mode or SIL mode.

SIL mode provides the following benefits:

- SIL 2/3 (hardware/software) Functional Safety Assessment by TÜV Süd in accordance with IEC 61508, ed. 2.0.
- Measuring points with one sensor or two sensors up to SIL 2.
- Creation of two measuring points up to SIL 3 (requires 2 redundant RTT80s).
- Self-monitoring.

Multiple Packaging Configurations

The transmitter is offered in a basic module package or with dual-compartment housing selections.

The DIN B size basic transmitter module is intrinsically safe and is offered for replacement or spare parts purposes, for mounting to a surface, or for mounting to a DIN rail using the optional clip.

Alternately, you can select a dual-compartment housing, which isolates and seals the wiring terminals from the electronics compartment. Both options provide built-in protection from vibration and RFI.

You can mount a transmitter with an integral sensor (and thermowell, if desired) directly to the process. Surface- and pipe-mounted configurations allow the transmitter to be mounted remotely from the process.

Figure 1 - Available Housing and Sensor Mounting Codes

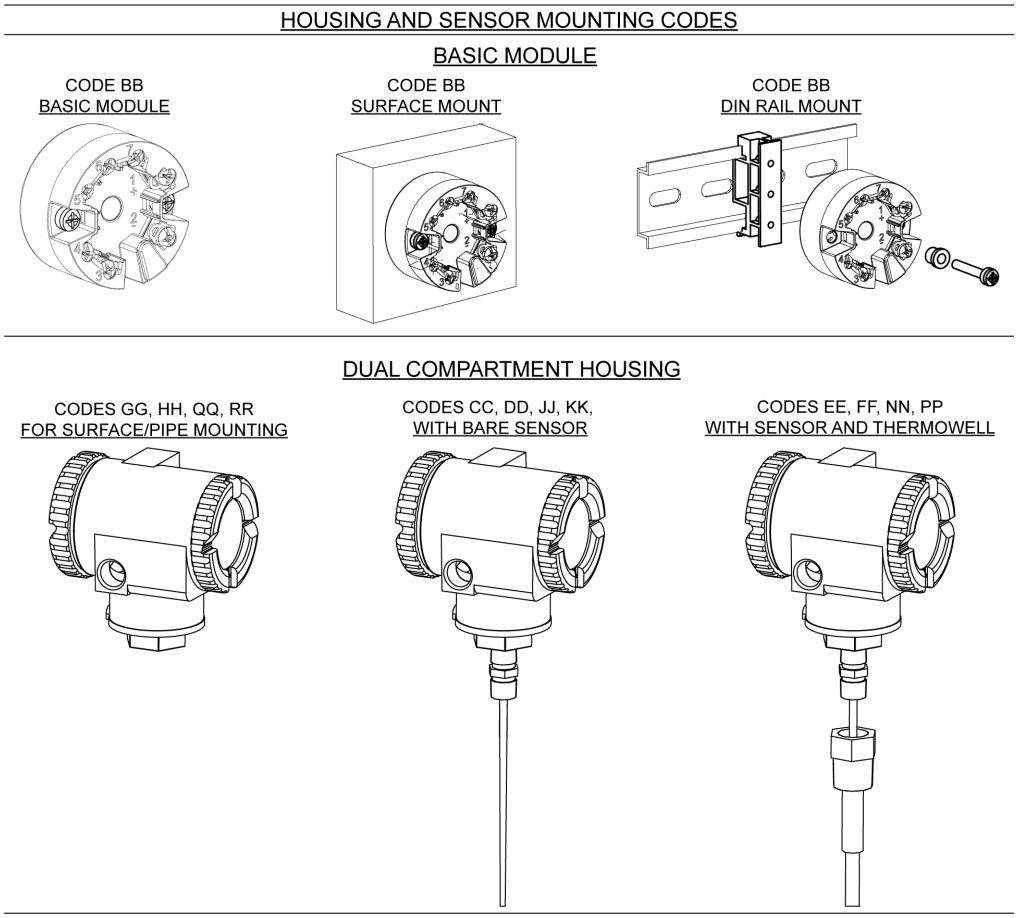

Efficient and Durable

Industrial-grade integrated circuits and sealed electronics combine to make this microprocessor- based transmitter an efficient and durable device.

Input Types

The RTT80 is a configurable temperature field transmitter with either one or two temperature sensor inputs for 2-, 3-, and 4-wire resistance temperature detectors (RTD), thermocouples (TC), and resistance and voltage transmitters. The following is a general list of transmitter input types:

- Platinum RTDs, 2-, 3-, and 4-wire
- Nickel RTD, 3-wire
- Thermocouples
- Millivolt
- Ohm

Output Types

RTT80 outputs include:

- Single measurement or dual measurement configured as average, difference, or redundant measurements
- Automatic sensor backup - a second sensor starts measuring temperature if the primary sensor is not functioning correctly.
- Temperature-dependent switching between sensors that are used in different measuring ranges

Output units can be configured for various temperature units, ohms, or millivolts.

Remote Communications

Remote digital communication is provided with HART communication protocol.

Digital HART and 4 to 20 mA dc Protocol

4 to 20 mA with HART communications allows direct analog connection to common receivers while still providing full intelligent digital communications using a HART Communicator or PC-based configurator.

The RTT80 with HART communication is offered with Device Descriptors (DDs), Emerson AMS™ file and Field Device Tool DTM support.

Rugged Sensors

The sensors are of high quality and rugged construction, and provide maximum accuracy and longevity. Sensors designed for use with thermowells include a spring loading mechanism that helps ensure continuous contact between the sensor tip and thermowell.

Galvanic Isolation

2 kV ac Galvanic isolation is provided between input and output.

Out-Of-Range and Failure Current

Low out-of-range and high out-of-range output values are user configurable between 3.5 and 23 mA. A configuration selection for NAMUR 43 (3.8 and 20.5 mA) is also provided.

The transmitter can also be configured for sensor error detection. Output values are independently configurable between 3.5 and 23 mA for both shorted and open sensor conditions. Configuration selections are also provided for direct selection of NAMUR 43 low (3.5 mA) and NAMUR 43 high

(23 mA), both independently selectable for either shorted or open sensor conditions. Shorted sensor detection not applicable for thermocouples.

Transmitter Diagnostics

Standard available diagnostics include:

- Ambient operating temperature out of range detection
- Internal electronics diagnostic error detection
- Wiring error detection
- Sensor cable open circuit or short circuit detection
- Corrosion detection in sensor connection cables
- Low supply voltage detection
- Measurement over range and under range detection

Electromagnetic Compatibility (EMC) — CE Compliance

Electromagnetic compatibility in accordance with all the relevant requirements of the EN 61326 series and NAMUR Recommendation EMC (NE21). For details refer to the Declaration of Conformity. All tests were passed both with and without ongoing digital HART® communication.

Table 1 - Electromagnetic Compatibility (EMC)[1]

ESD (Electrostatic Charge)	EN/IEC 61000-4-2		6 kV cont., 8 kV air
Electromagnetic Fields	EN/IEC 61000-4-3	0.08 to 2.7 GHz	10 V/m
Burst (Fast Transients)	EN/IEC 61000-4-4		2 kV
Shock Wave (Voltage)	EN/IEC 61000-4-5		0.5 kV sym. 1 kV assym.
Conducted RF	EN/IEC 61000-4-6	0.01 to 80 MHz	10 V

(1) Maximum measured error < 1% of the measuring range.

Performance Specifications

To obtain the established values in °F, multiply the °C values by a factor of 1.8.

Response Time

The measured value update depends on the type of sensor and connection method, and moves within the ranges shown in the table.

Table 2 - Response Time

Resistance Thermometer (RTD)	0.9 to 1.3 s (depends on the connection method 2/3/4-wire)
Thermocouples (TC)	0.8 s
Reference Temperature	0.9 s

When recording step responses, add the times for measuring the second channel and the internal reference measuring point to the specified times where applicable.

Reference Conditions

- Calibration temperature: +25°C±3 K (+77°F±5.4°F)
- Supply voltage: 24 V dc
- 4-wire circuit for resistance adjustment

Maximum Measured Error and Repeatability

According to DIN EN 60770. The data concerning the various measured errors are typical values and correspond to a standard deviation of ±2 s (Gaussian normal distribution). Overall measured error of the device at current output = digital measured error + measured error D/A. .

Table 3 - Maximum Measured Error and Repeatability (RTD or Ω)

Resistance Thermometer (RTD) (according to Standard)	Designation	Measuring Range Limits	Measured Error (±)		Repeatability (±)	
			Digital[1]	D/A[2]	Digital[1]	D/A[3]
IEC 60751:2008	Pt100 (1)	–200 to +850°C (–328 to +1562°F)	≤ 0.14 K (0.25°F)	0.03%	≤ 0.05 K (0.09°F)	0.01% (≙ 2 µA)
	Pt200 (2)		≤ 0.86 K (1.55°F)		≤ 0.13 K (0.23°F)	
	Pt500 (3)	–200 to +500°C (–328 to +932°F)	≤ 0.30 K (0.54°F)		≤ 0.08 K (0.14°F)	
	Pt1000 (4)	–200 to +250°C (–328 to +482°F)	≤ 0.14 K (0.25°F)		≤ 0.05 K (0.09°F)	
JIS C1604:1984	Pt100 (5)	–200 to +510°C (–328 to +950°F)	≤ 0.12 K (0.22°F)		≤. 0.04 K (0.07°F)	
DIN 43760 IPTS-68	Ni100 (6)	–60 to +250°C (–76 to +482°F)	≤ 0.09 K (0.16°F)		≤ 0.03 K (0.05°F)	
	Ni120 (7)		≤ 0.07 K (0.13°F)			
GOST	Pt50 (8)	–185 to +1100°C (–301 to +2012°F)	≤ 0.30 K (0.54°F)		≤ 0.05 K (0.09°F)	
	Pt100 (9)	–200 to +850 °C (–328 to +1562°F)	≤ 0.14 K (0.25°F)		≤ 0.07 K (0.13°F)	
OIML R84: 2003, GOST 6651-2009	Cu50 (10)	–180 to +200°C (–292 to +392°F)	≤ 0.19 K (0.34°F)		≤ 0.04 K (0.07°F)	
	Cu100 (11)		≤ 0.09 K (0.16°F)		≤ 0.03 K (0.05°F)	
	Ni100 (12)	–60 to +180°C (–76 to +356°F)	≤ 0.09 K (0.16°F)		≤ 0.07 K (0.13°F)	
	Ni120 (13)					
OIML R84: 2003, GOST 6651-94	Cu50 (14)	–50 to +200°C (–58 to +392°F)	≤ 0.19 K (0.34°F)		15 µΩ ≤ 200 µΩ	
Resistance transmitters	Resistance Ω	10 то 400 Ω 10 то 2000 Ω	±0.04 Ω ±0.8 Ω		15 µΩ ≤ 200 µΩ	

(1) Using HART transmitted measured value.
(2) Percentage data refer to the configured span of the analog output signal.
(3) Percentage data refer to the current range of the analog output signal (20 mA).

Table 4 - Maximum Measured Error and Repeatability (TC or mV)

Thermocouples (TC) (according to Standard)	Designation	Measuring Range Limits[4]	Measured Error (±)		Repeatability (±)	
			Digital[5]	D/A[6]	Digital[5]	D/A[7]
IEC 60584, part 1	Type A (W5Re-W20Re) (30)	0 to 2500°C (+32 to + 4532°F)	≤ 1.62 K (2.92°F)	0.03%	≤ 0.52 K (0.94°F)	0.01% (≙ 2µA)
	Type B (PtRh30-PtRh6) (31)	+500 to +1820°C (+932 to +3308°F)	≤ 2.02 K (3.64°F)		≤ 0.67 K (1.21°F)	
	Type E (NiCr-CuNi) (34)	–40 to +1000°C (–40 to +1832°F)	≤ 0.21 K (0.38°F)		≤ 0.07 K (0.13°F)	
	Type J (Fe-CuNi) (35)	–40 to +1200°C (–40 to +2192°F)	≤ 0.26 K (0.47°F)		≤ 0.08 K (0.14°F)	
	Type K (NiCr-Ni) (36)	–40 to +1200°C (–40 to +2192°F)	≤ 0.32 K (0.58°F)		≤ 0.11 K (0.20°F)	
	Type N (NiCrSi-NiSi) (37)	–40 to +1300°C (–40 to +2372°F)	≤. 0.43 K (0.77°F)		≤ 0.16 K (0.29°F)	
	Type R (PtRh13-Pt) (38)	0 to +1768°C (+32 to +3214°F)	≤ 1.92 K (3.46°F)		≤ 0.76 K (1.37°F)	
	Type S (PtRh10-Pt) (39)	0 to +1768°C (+32 to +3214°F)	≤ 1.9 K (3.42°F)		≤ 0.74 K (1.33°F)	
	Type T (Cu-CuNi) (40)	–40 to +400°C (–40 to +752°F)	≤ 0.32 K (0.58°F)		≤ 0.11 K (0.20°F)	
IEC 60584, part 1; ASTM E230/ E230M	Type C (W5Re-W26Re) (32)	0 to +2000°C (+32 to +3632°F)	≤ 0.86 K (1.55°F)		≤ 0.33 K (0.59°F)	
ASTM E230/ E230M	Type D (W3Re-W25Re) (33)	0 to +2000°C (+32 to +3632°F)	≤ 1.05 K (1.89°F)		≤ 0.41 K (0.74°F)	
DIN 43710	Type L (Fe-CuNi) (41)	+50 to +900°C (+122 to +1652°F)	≤ 0.26 K (0.47°F)		≤ 0.07 K (0.13°F)	
	Type U (Cu-CuNi) (42)	+50 to +600°C (+122 to +1112°F)	≤ 0.24 K (0.43°F)		≤ 0.10 K (0.18°F)	
GOST R8.8585-2001	Type L (NiCr-CuNi) (43)	–200 to +800°C (–328 to +1472°F)	≤ 2.27 K (4.09°F)		≤ 0.15 K (0.27°F)	
Voltage transmitters	Millivolt transmitter (mV)	-20 to 100 mV	10 µV		4 µV	

Sample Calculation

The table shows a sample calculation with Pt100, measuring range 0 to 200°C (32 to 392°F), ambient temperature 25°C (77°F), supply voltage 24 V.

(4) Ranges over which stated Error and Repeatability apply. Input may be configured to wider range. See Configurable Measuring Range Limits.
(5) Using HART transmitted measured value.
(6) Percentage data refer to the configured span of the analog output signal.
(7) Percentage data refer to the current range of the analog output signal (20 mA).

Measured Error Digital	0.14 K (0.25°F)
Repeatability Digital	0.05 K (0.09°F)
Measured error D/A = 0.03% of 200 K (360°F)	0.06 K (0.108°F)
Repeatability D/A = 0.01% of 200 K (360°F)	0.02 K (0.036°F)
Measured error digital value (HART): $\sqrt{}$(Measured error digital^2 + repeatability^2)	0.15 K (0.27°F)
Measured error analog value (current output): $\sqrt{}$(Measured error digital^2 + repeatability^2 + Measured error D/A^2)	0.16 K (0.29°F)

Table 5 - Physical Input Measuring Range of Sensors

10 to 400 Ω	Cu50, Cu100, polynomial RTD, Pt50, Pt100, Ni100, Ni120
10 to 2000	Pt200, Pt500, Pt1000
-20 to 100 mV	Thermocouples type: A, B, C, D, E, J, K, L, N, R, S, T, U

In SIL mode, other measured errors are applied. See MI 020-584.

Sensor Adjustment

RTD sensors are among the most linear temperature measuring elements. Nevertheless, the output must be linearized. To significantly improve temperature measurement accuracy, the device allows the use of two linearization methods:

- Callendar-Van-Dusen coefficients (Pt100 resistance thermometer)

  The Callendar-Van-Dusen equation is described as:

  $RT = R0[1+AT+BT^2+C(T-100)T^3]$

  The coefficients A, B, and C are used to match the sensor (platinum) and transmitter in order to improve the accuracy of the measuring system. The coefficients for a standard sensor are specified in IEC 751. If no standard sensor is available or if greater accuracy is required, the coefficients for each sensor can be determined specifically with the aid of sensor calibration.
- Linearization for copper/nickel resistance thermometers (RTD)

  The polynomial equation for copper/nickel is as follows:

  $RT = R0(1+AT+BT^2)$

  The coefficients A and B are used for the linearization of nickel or copper resistance thermometers (RTD). The exact values of the coefficients derive from the calibration data and are specific to each sensor. The sensor-specific coefficients are then sent to the transmitter.

Sensor transmitter matching using one of these methods significantly improves the temperature measurement accuracy of the entire system. This is because the transmitter uses the specific data pertaining to the connected sensor to calculate the measured temperature, instead of using the standardized sensor curve data.

- 1-point adjustment (offset): Shifts the sensor value
- 2-point adjustment (sensor trimming): Correction (slope and offset) of the measured sensor value at transmitter input

Content Output Adjustment

Correction of the 4 or 20 mA current output value (not possible in the SIL mode).

Operational Influences

The data concerning measured errors are typical values and correspond to a standard deviation of ±2 s (Gaussian normal distribution). Overall measured error of the device at current output = digital measured error + measured error D/A. See the tables.

Table 6 - Operational Influences (RTD or Ω)

2-, 3-, 4-wire RTD		Ambient Temperature Effect[8] Supply Voltage Effect[9]		Long-Term Drift[10]	
Standard	**Designation**	**Digital[11]**	**D/A[12]**	**Digital[11]**	**D/A[12]**
IEC 60751:2008	Pt100 (1)	≤ 0.02 K (0.04°F)	0.001%	≤ 0.16 K (0.29°F)	0.017%
	Pt200 (2)	≤ 0.03 K (0.05°F)		≤ 0.5 K (0.9°F)	
	Pt500 (3)	≤ 0.01 K (0.02°F)		≤ 0.2 K (0.36°F)	
	Pt100 (4)			≤ 0.1 K (0.18°F)	
JIS C1604:1984	Pt100 (5)			≤ 0.14 K (0.25°F)	
DIN 43760 IPTS-68	Ni100 (6)			≤ 0.1 K (0.18°F)	
	Ni120 (7)				
GOST 6651-94	Pt50 (8)	≤ 0.03 K (0.05°F)		≤ 0.4 K (0.72°F)	
	Pt100 (9)	≤ 0.02 K (0.04°F)		≤ 0.16 K (0.29°F)	
OIML R84: 2003, GOST 6651-2009	Cu 50 (10)	≤ 0.01 K (0.02°F)		≤ 0.23 K (0.41°F)	
	Cu100 (11)			≤ 0.12 K (0.22°F)	
	Ni100 (12)				
	Ni120 (13)			≤ 0.09 K (0.16°F)	
OIML R84: 2003, GOST 6651-94	Cu50 (14)			≤ 0.23 K (0.41°F)	
Resistance Transmitters	10 to 400 Ω	≤ 6 mΩ		48 mΩ	
	10 to 2000 Ω	≤ 30 mΩ		290 mΩ	

(8) Effect (±) when ambient temperature changes by 1°C (1.8°F).
(9) Effect (±) when supply voltage changes by 1 V.
(10) Effect ± per year.
(11) Using HART transmitted measured value.
(12) Percentage data refer to the configured span of the analog output signal.

Table 7 - Operational Influences (TC or mV)

Thermocouple		Ambient Temperature Effect[13]		Supply Voltage Effect[14]		Long-Term Drift[15]	
Standard	**Designation**	**Digital[16]**	**D/A[17]**	**Digital[16]**	**D/A[17]**	**Digital[16]**	**D/A[17]**
IEC 60584 part 1	Type A (W5Re-W20Re) (30)	≤ 0.13 K (0.23°F)	0.001%	≤ 0.13 K (0.23°F)	0.001%	≤ 1.3 K (2.34°F)	0.017%
	Type B (PtRh30-PtRh6) (31)	≤ 0.01 K (0.02°F)		≤ 0.01 K (0.02°F)		≤ 1.7 K (3.06°F)	
	Type E (NiCr-CuNi) (34)	≤ 0.03 K (0.05°F)		≤ 0.03 K (0.05°F)		≤ 0.2 K (0.36°F)	
	Type J (Fe-CuNi) (35)	≤ 0.04 K (0.07°F)		≤ 0.04 K (0.07°F)			
	Type K (NiCr-Ni) (36)					≤ 0.3 K (0.54°F)	
	Type N (NiCrSi-NiSi) (37)					≤ 0.4 K (0.72°F)	
	Type R (PtRh13-Pt) (38)	≤ 0.01 K (0.02°F)		≤ 0.05 K (0.09°F)		≤ 1.9 K (3.42°F)	
	Type S (PtRh10-Pt) (39)						
	Type T (Cu-CuNi) (40)			≤ 0.01 K (0.02°F)		≤ 0.3 K (0.54°F)	
IEC 60584 part 1; ASTM E230/E230M	Type C (W5Re-W26Re) (32)	≤ 0.08 K (0.14°F)		≤ 0.08 K (0.14°F)		≤ 0.8 K (1.44°F)	
	Type D (W3Re-W25Re) (33)					≤ 1 K (1.8°F)	
DIN 43710	Type L (Fe-CuNi) (41)	≤ 0.03 K (0.05°F)		≤ 0.03 K (0.05°F)		≤ 0.2 K (0.36°F)	
	Type U (Cu-CuNi) (42)	≤ 0.02 K (0.04°F)		≤ 0.02 K (0.04°F)		≤ 0.3 K (0.54°F)	
GOSTS r8.8585-2001	Type L (NiCr-CuNi) (43)	≤ 0.03 K (0.05°F)		≤ 0.03 K (0.05°F)		≤ 0.4 K (0.72°F)	
Voltage Transmitters	Millivolt transmitter (mV)	≤ 3µV		≤ 3µV		≤ 10µV	

Sample Calculation

The table shows a sample calculation with Pt100, measuring range 0 to 200°C (32 to 392°F), ambient temperature 35°C (95°F), supply voltage 30 V.

Table 8 - Sample Calculation

Measured Error Digital	0.14 K (0.25°F)
Repeatability Digital	0.05 K (0.09°F)
Measured error D/A = 0.03% of 200 K (360°F)	0.06 K (0.108°F)
Repeatability D/A = 0.01% of 200 K (360°F)	0.02 K (0.036°F)
Influence of ambient temperature (digital), 0.02°C/K: (35°C - 25°C) x 0.02°C/K	0.2 K (0.36°F)

(13) Effect (±) when ambient temperature changes by 1°C (1.8°F).
(14) Effect (±) when supply voltage changes by 1 V.
(15) Effect ± per year.
(16) Using HART transmitted measured value.
(17) Percentage data refer to the configured span of the analog output signal.

Table 8 - Sample Calculation (Continued)

Influence of ambient temperature (D/A), 0.001%/K: (35°C - 25°C) x (0.001% of 200°C)	0.02 K (0.036°F)
Influence of supply voltage (digital), 0.02 K/V: (30 V - 24 V) x 0.02 K/V	0.12 K (0.216°F)
Influence of supply voltage (D/A), 0.001%/V: (30 V - 24 V) x (0.001% of 200°C)	0.012 K (0.0216°F)
Measured error digital value (HART): √ (Measured error digital² + repeatability² + influence of ambient temperature (digital)² + influence of supply voltage (digital)²)	0.28 K (0.50°F)
Measured error analog value (current output): √ (Measured error digital² + repeatability² + influence of ambient temperature (digital)² + influence of ambient temperature (D/A)² + influence of supply voltage (digital)² + influence of supply voltage (D/A)²)	0.29 K (0.52°F)

Influence of the Reference Junction (Internal Cold Junction)

Pt100 DIN IEC 60751 Cl. B (internal cold junction with thermocouples TC).

Functional Specifications

Input Types, Ranges, and Limits

Table 9 - Input Types, Ranges, and Limits (RTD or Ω)

Resistance Thermometer (RTD) per Standard	Designation	a	Measuring Range Limits	Min Span
IEC 60751:2008	Pt100 (1)	0.003851	-200 to +850°C (–328 to +1562°F)	10 K (18°F)
	Pt200 (2)			
	Pt500 (3)		-200 to +500°C (–328 to +932°F)	
	Pt1000 (4)		-200 to +250°C (–328 to +482°F)	
JIS C1604:1984	Pt100 (5)	0.003916	-200 to +510°C (–328 to +950°F)	
DIN 43760 IPTS-68	Ni100 (6)	0.006180	-60 to +250°C (–76 to +482°F)	
	Ni120 (7)			
GOST 6651-94	Pt50 (8)	0.003910	-185 to +1100°C (–301 to +2012°F)	
	Pt100 (9)		-200 to +850°C (–328 to +1562°F)	
OIML R84: 2003, GOST 6651-2009	Cu50 (10)	0.004280	-180 to +200°C (–292 to +392°F)	
	Cu100 (11)			
	Ni100 (12)	0.006170	-60 to +180°C (–76 to +356°F)	
	Ni120 (13)			
OIML R84: 2003, GOST 6651-94	Cu50 (14)	0.004260	-50 to +200°C (–58 to +392°F)	
Pt100 (Callendar-Van Dusen)		—	The measuring range limits are specified by entering the limit values that depend on the coefficients A to C and R0	
—	Nickel Polynomial			
—	Copper Polynomial			
	Type of connection: 2-wire, 3-wire or 4-wire connection, sensor current: ≤ 0.3 mA With 2-wire circuit, compensation of wire resistance possible (0 to 30 Ω) With 3-wire and 4-wire connection, sensor wire resistance up to max. 50 Ω per wire			
Resistance Transmitter	Resistance Ω		10 and 400 Ω	10 Ω
			10 and 2000 Ω	

Table 10 - Input Types, Ranges, and Limits (TC or mV)

TC Per Standard	Designation	Configurable Measuring Range Limits	Recommended Temperature Range	Min Span
IEC 60584, Part 1	Type A (W5Re-W20Re)(30)	0 to +2500°C (+32 to +4532°F)	0 to +2500°C (+32 to +4532°F)	50 K (90°F)
	Type B (PtRh30-PtRh6)(31)	+40 to +1820°C (+104 to +3308°F)	+100 to +1500°C (+212 to +2732°F)	
	Type E (NiCr-CuNi) (34)	-270 to +1000°C (-454 to +1832°F)	0 to +750°C (+32 to +1382°F)	
	Type J (Fe-CuNi) (35)	-210 to +1200°C (-346 to +2192°F)	+20 to +700°C (+68 to +1292°F)	
	Type K (NiCr-Ni) (36)	-270 to +1372°C (-454 to +2501°F)	0 to +1100°C (+32 to +2012°F)	
	Type N (NiCrSi-NiSi) (37)	-270 to +1300°C (-454 to +2372°F)	0 to +1100°C (+32 to +2012°F)	
	Type R (PtRh13-Pt) (38)	-50 to +1768°C (-58 to +3214°F)	0 to +1400°C (+32 to +2552°F)	
	Type S (PtRh10-Pt) (39)			
	Type T (Cu-CuNi) (40)	-260 to +400°C (-436 to +752°F)	-185 to +350°C (-301 to +662°F)	
IEC 60584, Part 1; ASTM E230/E230M	Type C (W5Re-W26Re) (32)	0 to +2315°C (+32 to +4199°F)	0 to +2000°C (+32 to +3632°F)	50 K (90°F)
	Type D (W3Re-W25Re) (33)			
DIN 43710	Type L (Fe-CuNi) (41)	-200 to +900°C (-328 to +1652°F)	0 to +750°C (+32 to +1382°F)	50 K (90°F)
	Type U (Cu-CuNi) (42)	-200 to +600°C (-328 to +1112°F)	-185 to +400°C (-301 to +752°F)	
GOST R8.8585-2001	Type L (NiCr-CuNi) (43)	-200 to +800°C (-328 to +1472°F)	0 to +750°C (+32 to +1382°F)	50 K (90°F)
	Internal cold junction (Pt100) External cold junction: configurable value -40 to +85°C (-40 to +185°F) Max. sensor resistance k10 kΩ (if sensor resistance is greater than 10 kΩ, an error message is output per NAMUR)			
Voltage Transmitter	Millivolt Transmitter (mV)	-20 to 100 mV		5 mV

Input Wiring/Connections

Sensor Input	Sensor Input 1			
	RTD or Resistance Transmitter			Thermocouple (TC), Voltage Transmittter
	2-wire	3-wire	4-wire	
RTD or Resistance Transmitter, 2-Wire	OK	OK	—	OK
RTD or Resistance Transmitter, 3-Wire	OK	OK(18)	—	OK(18)
RTD or Resistance Transmitter, 4-Wire	—	—	—	—
Thermocouple (TC), Voltage Transmitter	OK	OK(18)	OK(18)	OK(18)

Figure 2 - Input Connections — Basic Transmitter

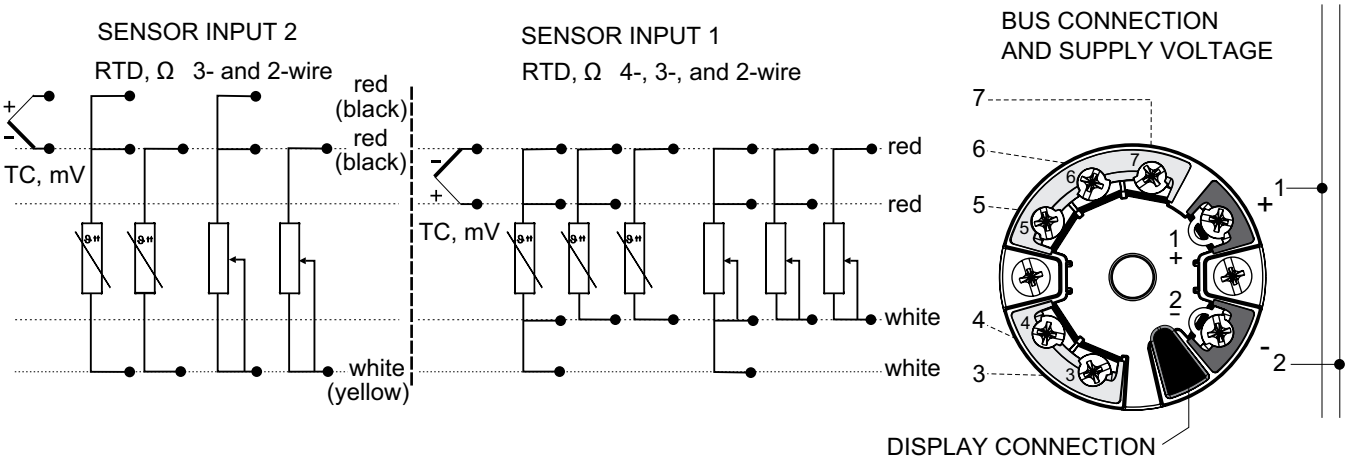

(18) Wiring types are permitted in SIL mode.

Figure 3 - Dual Compartment Housing Wiring from the Terminal Block to the Module

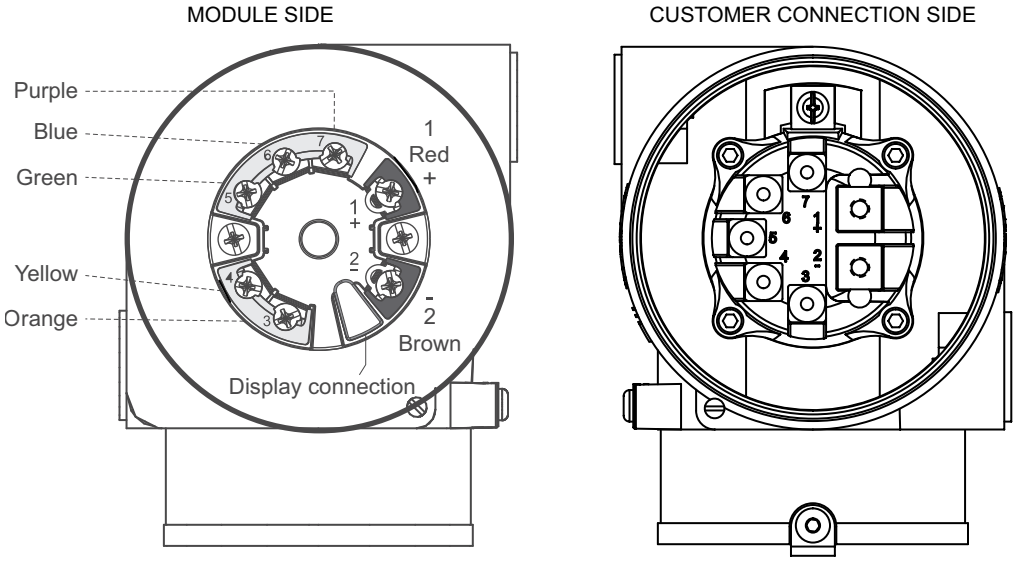

NOTE: The terminals for connecting the signal cable (1+ and 2-) are insensitive to reverse polarity.

Output Signal

Characteristic	Output
Analog Output	4 to 20 mA, 20 to 4 mA (can be inverted)
Signal Encoding	FSK ± 0.5 mA via current signal
Data Transmission Rate	1200 baud
Galvanic Isolation	U = 2 kV AC (input/output)
Linearization/Transmission Behavior	Temperature-linear, resistance-linear, voltage-linear
Network Frequency Filter	50/60 Hz
Filter	1st Order Digital Filter: 0 to 120 s

HART Protocol-Specific Data

- HART version: 7
- Device Address in Multidrop Mode(19): Software setting addresses 0 to 63
- Device Description (DD) files: Available at https://www.se.com/ww/en/download
- Load (communication resistor): 250 Ω minimum

Write Protection for Device Parameters

Hardware: Write protection for head transmitter on optional display using DIP switch

Software: Write protection using password

(19) Not possible in SIL mode.

Switch-On Delay

- Until start of HART communication: approximately 10 s, with switch-on delay = $I_a \leq 3.8$ mA
- Until the first valid measured value signal is present at the current input: approximately 28 s, with switch-on delay = $I_a \leq 3.8$ mA

Supply Voltage Requirements and External Loop Load Limitations

HART 4 to 20 mA output with a superimposed digital signal.

Nominal supply voltage:

- Normal mode: 11 to 42 V dc (minimum 16.75 V for HART communication)
- SIL mode: 11 to 32 V dc

Figure 4 - HART 4 to 20 mA Output Supply Voltage vs. Output Load

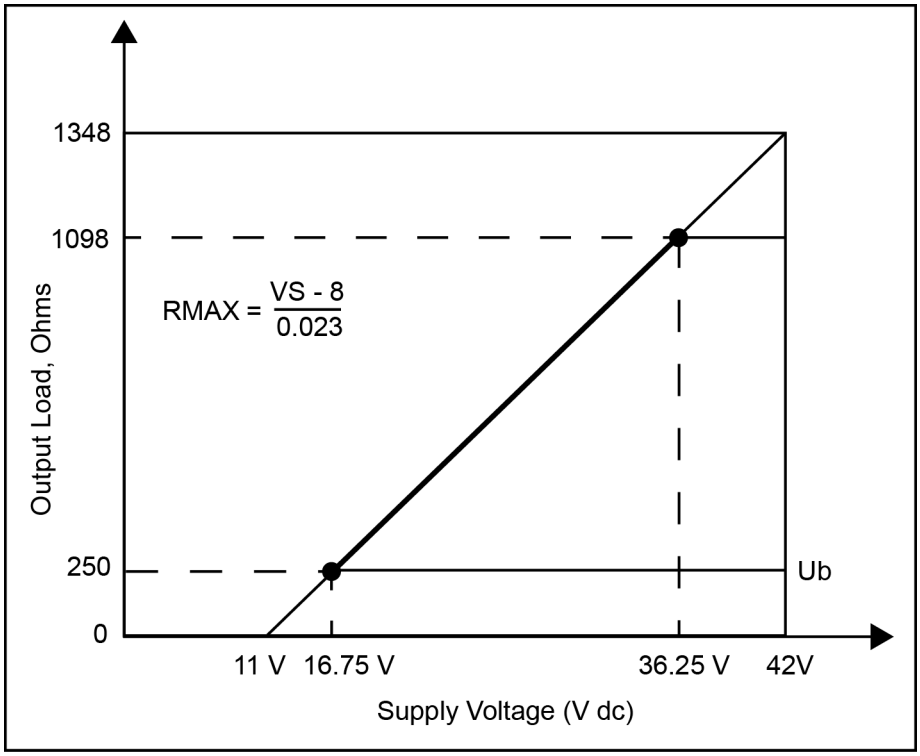

NOTE: The transmitter functions with an output load less than 250 Ω provided that a HART Communicator or PC-based Configurator is not connected to it. Use of a HART Communicator or PC-based Configurator requires 250 Ω minimum load.

Sensor Types

The following sensors can be ordered factory-mounted to the transmitter housing. See PSS 3-3E1 A.

- Thermocouple, Type E
- Thermocouple, Type J

- Thermocouple, Type K
- Thermocouple, Type N
- Thermocouple, Type T
- 3-wire RTD, 100 ohm platinum IEC 751 (ASTM-B standard accuracy)
- 4-wire RTD, 100 ohm platinum IEC 751 (ASTM-B standard accuracy)
- 3-wire RTD, 100 ohm platinum IEC 751 (ASTM-A high accuracy)
- 4-wire RTD, 100 ohm platinum IEC 751 (ASTM-A high accuracy)
- 3-wire RTD, Callendar-Van Dusen

TC Cold Junction Compensation

- Internal cold junction (Pt100)
- External cold junction: configurable variable -40 to +85°C (-40 to +185°F)
- Maximum sensor resistance 10 kΩ; if sensor resistance is greater than 10 kΩ, a message is output per NAMUR NE89

Multidrop Mode (Fixed Current)

Multidrop mode supports communication with up to 64 transmitters on a single pair of signal/power wires. The output signal is updated 4 times per second. A minimum loop load of 250 ohms is required.

Table 11 - HART Communication Parameters

Parameter	Analog Mode	Multidrop Mode
Remote Configurator	HART Communicator or PC-Based Configurator	
Communication Rate	1200 baud	1200 baud
Communication Distance (Rated)	3050 m (10,000 ft)	1525 m (5,000 ft)

Figure 5 - HART 4 to 20 mA Output Block Diagram (One Transmitter)

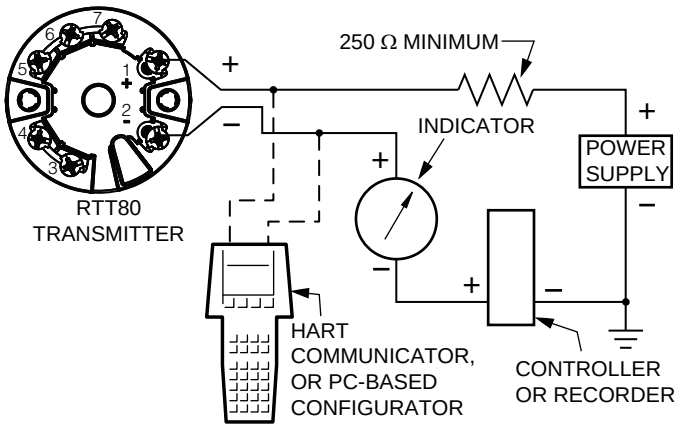

Thermowells

The thermowells listed in Model Code, page 28 are for industrial use. Other high quality, polished thermowells are available in a variety of configurations, materials, and sizes. Most application requirements can be met from the wide selection offered.

See PSS 3-3D1 A for Type T thermowells, or contact Global Customer Support.

Figure 6 - Sample T-Series and W-Series Thermowells

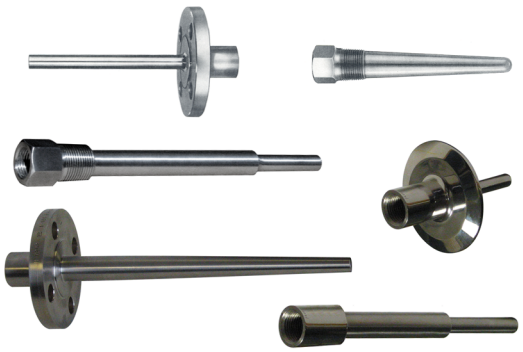

Physical Specifications

Transmitter Housing Codes

Housing Code	Material and Finish	IEC/NEMA Rating	Explosion-proof and Flame-proof	Mounting Configuration	Field Wiring Entrances on Housing
BB	Encapsulated plastic	IP20[20]	No	Basic Transmitter Module[21] (DIN Form B package)	None
CC	Low copper aluminum alloy; epoxy coated	IP66/67 TYPE 4X	Yes	With integral bare sensor	M20
DD	Stainless steel			With integral bare sensor	
EE	Low copper aluminum alloy; epoxy coated			With integral sensor and thermowell	
FF	Stainless steel			With integral sensor and thermowell	
GG	Low copper aluminum alloy; epoxy coated			For surface or pipe mounting, remote sensor	
HH	Stainless steel			For surface or pipe mounting, remote sensor	
JJ	Low copper aluminum alloy; epoxy coated			With integral bare sensor	1/2 NPT
KK	Stainless steel			With integral bare sensor	
NN	Low copper aluminum alloy; epoxy coated			With integral sensor and thermowell	
PP	Stainless steel			With integral sensor and thermowell	
QQ	Low copper aluminum alloy; epoxy coated			For surface or pipe mounting, remote sensor	
RR	Stainless steel			For surface or pipe mounting, remote sensor	

Mounting

The basic transmitter module can be mounted to a DIN rail using the optional mounting clip and self-tapping screw provided. The basic module can also be mounted to a surface using user-supplied hardware. See Dimensions — Nominal, page 32.

The transmitter enclosed in the dual compartment housing (without integral sensors) can be remote mounted to a surface or nominal DN50 or 2 inch pipe using an optional mounting bracket.

(20) Although the basic module is encapsulated, it has exposed terminals that may not be protected from the environment.
(21) The basic module is typically used for replacement and spares; it can also be mounted to a surface or to a DIN rail using a clip (Option -D1).

Dimensions

See Dimensions — Nominal, page 32.

Approximate Mass

Housing Code	Direct or Remote Mounting	Housing Material	Standard		With Optional Display	
			kg	lb	kg	lb
BB(22)	n/a	n/a	0.05	0.11	0.01	0.02
EE and NN(23)	Direct	Aluminum	1.3	2.8	1.3	2.8
CC and JJ(24)						
GG and QQ(25)	Remote		1.3	2.8	1.3	2.9
FF and PP(23)	Direct	316 ss	2.9	6.4	2.9	6.5
DD and KK(24)						
HH and RR(25)	Remote		2.9	6.5	3.0	6.6

(22) Basic transmitter module, no housing.
(23) Includes module, but sensor and thermowell mass and connecting hardware are not included.
(24) Includes module, but bare sensor mass and connecting hardware are not included.
(25) Surface or pipe mount housing; remote sensor.

Operating, Transportation, and Storage Conditions

Table 12 - Operating, Transportation, and Storage Conditions

Influence(26)	**Operative Limit**(27) (28)	**Transportation and Storage Limits (if different from Operative Limits)**
Ambient Temperature(29) Transmitter and optional -L1 display	-40 and +85°C (-40 and +185°F)(27)	-50 and +100°C (-40 and 212°F)
Relative Humidity(30) Transmitter and optional -L1 display	Condensation according to IEC 60068-2-33 Max. rel. humidity: 95% according to IEC 60068-2-30	
Climate Class	Class C1 according to EN 60654-1	
Altitude	Up to 4000 m (13,124 ft.) above mean sea level per IEC 61010-1, CAN/CSA C22.2 No. 61010-1	
Ingress Protection	IP20	
Measuring Category	Category II per IEC 61010-1. The measuring category is provided for measuring on power circuits that are directly connected electrically with the low-voltage network.	
Degree of Contamination	Pollution degree 2 per IEC 61010-1.	
Supply Voltage for HART(31)	11 and 42 V dc (minimum 16.75 V for HART communication)	Not Applicable
Vibration	25 to 100 Hz for 4 “g” per GL guideline, section 2, issue 3B, paragraph 9 and IEC 60068-2-27 and IEC 60068-2-6	1070 mm (42 in) drop in shipping container
Vibration: Housing and Sensor Mounting Codes CC, EE, GG, JJ, NN, QQ	19 mm (0.75 in) Double Amplitude from 5 to 9 Hz, 0 to 30 m/s^2 (0 to 3 “g”) from 9 to 500 Hz	
Vibration: Housing and Sensor Mounting Codes DD, FF, HH, KK, PP, RR	10 m/s^2 (1 “g”) maximum	

(26) Applies to Basic Transmitter Module only (Housing and Sensor Mounting Code BB) unless otherwise indicated.
(27) SIL mode operation is limited to high temperature of 70°C (158°F). Also see Electrical Certifications, page 27 for a restriction in ambient temperature with certain agency approvals/certifications.
(28) Normal Operating Conditions and Operative Limits are defined per ANSI/ISA 51.1-1979 (R1993).
(29) To help ensure proper operation, do not exceed the ambient temperature limits at the housing. This is particularly relevant when sensors/thermowells are directly connected to the housing and very high process temperatures are being measured. Minimize the transfer of heat from the process to the housing by using thermowell extensions, or in extreme cases, by using a remote housing installation.
(30) When mounted in available housings with covers on.
(31) See Supply Voltage Requirements and External Loop Load Limitations, page 21 for supply voltage vs. external loop load limitations graph.

Electrical Certifications

The transmitter is designed to meet the electrical certification descriptions listed in the table below. Contact Global Customer Support for information on status of testing laboratory approvals or certifications.

Testing Laboratory, Type of Protection, and Area Classification	Model Code Option
CSA IS, I/1+2/ABCD	CA
CSA NI, 1/2/ABCD	CN
CSA Explosionproof, Class I, Division 1, BCD; Dust-ignitionproof, Class II, Division 1, EFG, Class III, Division 1 Also, zone certified, Cl I, Zone 1, Ex d IIC(32)	CD
ATEX II 1G Ex ia IIC T6...T4 Ga II 2G Ex ia IIC T6...T4 Gb	AA
ATEX II 2 G Ex db IIC T6 Gb Ta=-40°C to +70°C; IP66/67 II 2 D Ex tb IIIC T85C Db Ta=-40°C to +70°C; IP66/67(32)	AD
IECEx Ex ia IIC T6...T4 Ga Ex ia IIC T6...T4 Gb	EA
IECEx Ex db IIC T6 Gb Ta=-40°C to 70°C IP66/67 Ex tb T85°C Db Ta=-40°C to 70°C IP66/67(32)	ED
FM IS, I/1+2/ABCD	FA
FM NI, I/2/ABCD	FN
FM Explosionproof, Class I, Division 1, Groups B, C, and D; Dust-ignitionproof, Class II, Division 1, Groups E, F, and G; Class III Division 1(32)	FD
Non-hazardous area	ZZ

(32) Not available with the basic module (Housing and Sensor Mounting Code BB).

Model Code

Table 13 - Model Code for RTT80 Temperature Transmitter

Code	Description
Model	
RTT80	RTT80 Temperature Transmitter
Communications	
-T	4 to 20 mA with HART™ digital communications
-F	FOUNDATION™ Fieldbus H1 digital communications
Input/Output Configuration(33)	
1	Configured for Single Sensor Input
2	Configured for Dual Sensor Input – PV is Sensor 1
3	Configured for Dual Sensor Input – PV is average of Sensor 1 and Sensor 2
4	Configured for Dual Sensor Input – PV is difference between Sensor 1 and Sensor 2
5	Configured for Dual Sensor Input – Sensor 2 is a backup for Sensor 1
6	Configured for Dual Sensor Input – PV is average with sensor backup
Housing and Sensor Mounting	
BB	Basic Module for DIN Rail or Surface Mounting or Replacement
JJ	Dual compartment aluminum housing, 1/2 NPT conduit with sensor(34)
KK	Dual compartment ss housing, 1/2 NPT conduit with sensor(34)
NN	Dual compartment aluminum housing, 1/2 NPT conduit with sensor and thermowell mounting(34)
PP	Dual compartment ss housing, 1/2 NPT conduit with sensor and thermowell mounting(34)
QQ	Dual compartment aluminum housing, 1/2 NPT conduit for use with remote sensor(35)
RR	Dual compartment ss housing, 1/2 NPT conduit for use with remote sensor(35)
CC	Dual compartment aluminum housing, M20 conduit with sensor(34)
DD	Dual compartment ss housing, M20 conduit with sensor(34)
EE	Dual compartment aluminum housing, M20 conduit with sensor and thermowell mounting(34)
FF	Dual compartment ss housing, M20 conduit with sensor and thermowell mounting(34)
GG	Dual compartment aluminum housing, M20 conduit for use with remote sensor(35)
HH	Dual compartment ss housing, M20 conduit for use with remote sensor(35)

(33) Input measurement must be the same for both sensors. Dual 4-wire RTD is not permitted. Only Input 1 can be configured for 4-wire RTD.
(34) This option initiates the PRMTA configurable sensor model code. If you are ordering a PRMTA configurable sensor, be sure that the RTT80 Input Measurement Type ordered matches the PRMTA Configurable Sensor Input Measurement Type.
(35) Sensor is ordered separately.

Table 13 - Model Code for RTT80 Temperature Transmitter (Continued)

Code	Description
Input Measurement Type(36)	
B	Thermocouple, Type B(37)
C	Thermocouple, Type C(37)
D	Thermocouple, Type D(37)
E	Thermocouple, Type E
J	Thermocouple, Type J
K	Thermocouple, Type K
L	Thermocouple, Type L(37)
N	Thermocouple, Type N
R	Thermocouple, Type R(37)
S	Thermocouple, Type S(37)
T	Thermocouple, Type T
U	Thermocouple, Type U(37)
2	2-wire RTD, 100 ohm platinum IEC 751, ASTM-B Standard Accuracy(37)
Q	3-wire RTD, 100 ohm platinum IEC 751, ASTM-B Standard Accuracy
4	4-wire RTD, 100 ohm platinum IEC 751, ASTM-B Standard Accuracy(38)
A	3-wire RTD, 100 ohm platinum IEC 751, ASTM-A High Accuracy
6	4-wire RTD, 100 ohm platinum IEC 751, ASTM-A High Accuracy(38)
F	3-wire RTD, 100 ohm nickel, DIN 43760(37)
P	Ohms input
M	Millivolt input
W	3-wire RTD Platinum (Callendar-van Dusen)
Z	Other (factory configuration for an Input Measurement Type not listed above)(39)
Thermowell Assembled to Housing	
NA	No Thermowell or Thermowell is supplied separately(40)
TK	Thermowell Series “T-” assembled to housing; specify child thermowell(41)

(36) The transmitter is factory configured for the measurement type specified, whether the sensor is included or not. You can change the configuration to a different type using appropriate configuration software for the selected protocol, or specify -C2 Option for custom factory configuration. On dual sensor input (Sensor Input = 2), both inputs are configured the same, unless specified via the -C2 configuration form.
(37) Only available with the basic module or a module for use with a remote sensor (Housing and Sensor Mounting Codes BB, QQ, RR, GG, HH).
(38) Only available with single sensor input (Input/Output Configuration Code 1).
(39) This option requires selection of the Custom Database Configuration (Model Code Option -C2) under “Other Optional Features”.
(40) This option is required for all housing options that are not configured for thermowells (Housing and Sensor Mounting Codes BB, JJ, KK, QQ, RR, CC, DD, GG, HH).
(41) This option allows you to select a PRMTA configurable sensor with TT, TF, TS, or TW thermowell codes.

Table 13 - Model Code for RTT80 Temperature Transmitter (Continued)

Code	Description
Hazardous Area Certifications(42)	
ZZ	Non-hazardous area
CA	CSA IS, I/1+2/ABCD
CN	CSA NI, 1/2/ABCD
CD	CSA Explosionproof, Class I, Division 1, BCD; Dust-ignitionproof, Class II, Division 1, EFG, Class III, Division 1. Also zone certified, CL I, Zone 1, EX d IIC(43)
AA	ATEX II 1G Ex ia IIC T4/T5/T6
AD	ATEX II 2 G Ex db IIC T6 Gb(43)
EA	IECEx Ex ia IIC T4/T5/T6(43)
ED	IECEx Ex db T6 Gb(43)
FA	FM IS, I/1+2/ABCD
FN	FM NI, I/2/ABCD
FD	FM Explosionproof, Class I, Division 1, Groups B, C, and D; Dust-ignitionproof, Class II, Division 1, Groups E, F, and G, Class III Division 1(43)
Optional Selections	
Housing Features	
-A1	Custody Transfer Lock and Seal(43)
-A3	Metric M20 Conduit Adapter (1/2 NPT by M20 x 1.5)
Housing Connection to Thermowell	
-S3	Stainless Steel Union and Fittings(44)
Mounting Sets	
-M3	Mounting Set for Dual Compartment Housing – Painted Steel(45)
-M4	Mounting Set for Dual Compartment Housing – Stainless Steel(45)
-M5	Mounting Set for Dual Compartment Housing – Rugged Painted Steel(46)
-M6	Mounting Set for Dual Compartment Housing – Rugged Stainless Steel(46)
-D1	Clip for DIN rail mounting of the basic module

(42) The transmitter has been designed to meet the Electrical Safety descriptions listed in this table. Contact Global Customer Support for information and status of testing laboratory approvals or certifications.
(43) Not available with the basic module (Housing and Sensor Mounting Code BB).
(44) Optionally available with aluminum housings configured for sensor and thermowell mounting (Housing and Sensor Mounting Codes NN, EE with Hazardous Area Certifications CA, CN, FA, FN, ZZ). Standard with Housing and Sensor Mounting Codes NN, EE and Hazardous Area Certifications CD, FD, AA, AD, EA, ED. Standard on ss housings configured for sensor and thermowell mounting (Housing and Sensor Mounting Codes PP, FF).
(45) Only available with aluminum dual compartment housings (Housing and Sensor Mounting Codes GG, QQ).
(46) Required for ss dual compartment housings (Housing and Sensor Mounting Codes HH and RR) if a mounting set is desired. Also available with aluminum dual compartment housings (Housing and Sensor Mounting Codes GG, QQ) if a mounting set is desired.

Table 13 - Model Code for RTT80 Temperature Transmitter (Continued)

Code	Description
Other Optional Features	
-S2	SIL Certification(47)
-C2	Custom Database Configuration
-L1	With Local Indicator
-C5	Cleaned and Prepared for Oxygen Service(48)
-WF	Wake Frequency Calculations(49)
-N1	NACE Compliant Thermowell(49) (50)

Ordering Instructions

1. Model Number
2. Electrical Certification Model Code Option
3. Accessories
4. User Tag Information

(47) SIL available only with HART Communications option (-T).
(48) Not available with the basic module (Housing and Sensor Mounting Code BB).
(49) Requires dual compartment housings with sensor and thermowell mounting options (Housing and Sensor Mounting Codes NN, PP, EE, FF).
(50) Only available with Thermowell Option Code TK (“T-” thermowell assembled to housing).

Dimensions — Nominal

All dimensions in diagrams are shown in millimeters over inches ($\frac{mm}{in}$).

Figure 7 - Basic Module

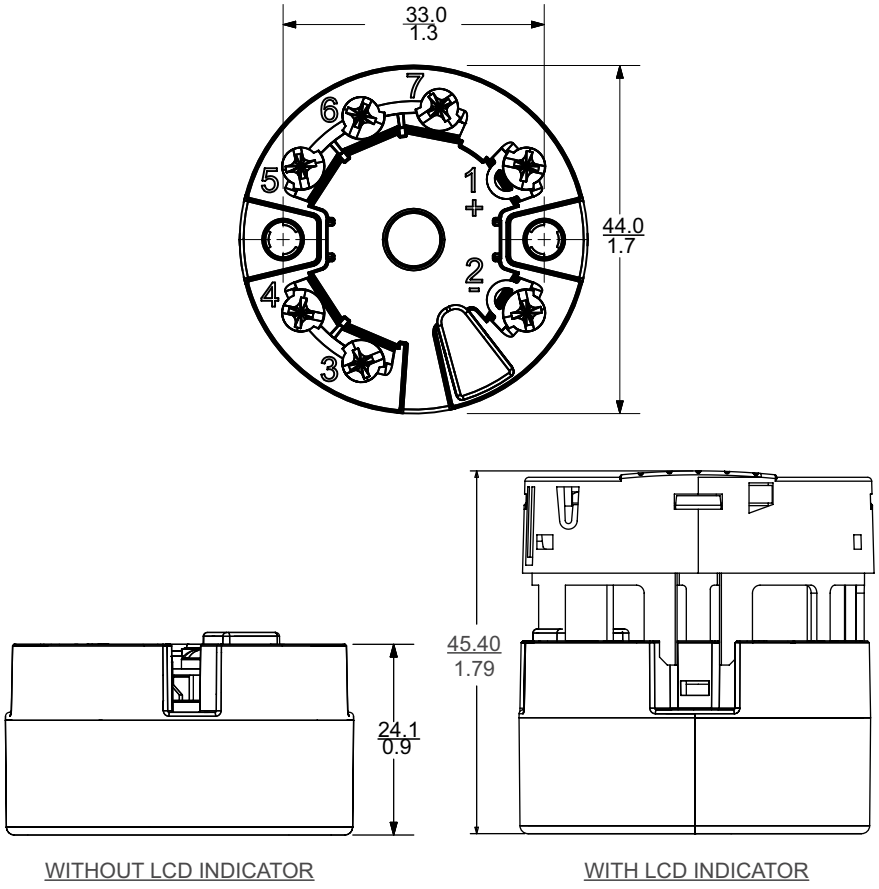

Figure 8 - Remote Sensor Mounting — Housing Codes GG, HH, QQ, RR

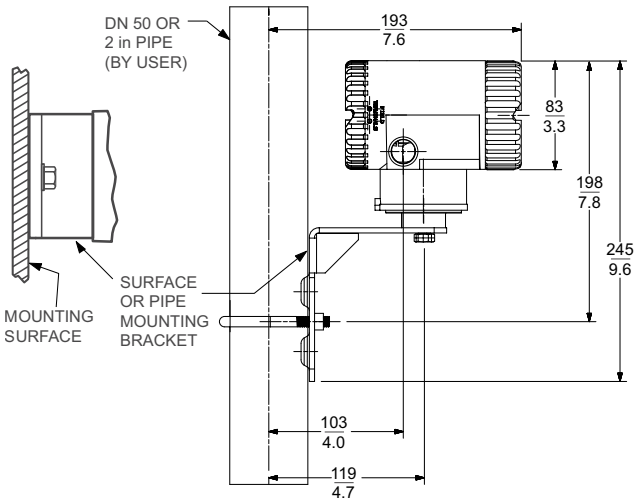

HOUSING CODES

GG = ALUMINUM M20 HOUSING FOR REMOTE SENSOR
HH = 316 SS M20 HOUSING FOR REMOTE SENSOR
QQ = ALUMINUM 1/2 NPT HOUSING FOR REMOTE SENSOR
RR = 316 SS 1/2 NPT HOUSING FOR REMOTE SENSOR

NOTES

1. ALLOW 51 mm (2 in) CLEARANCE FOR COVER REMOVAL.
2. EXTERNAL COVER LOCK AND GROUND SCREW WHEN APPLICABLE.

Figure 9 - Housing Codes CC, DD, EE, FF, JJ, KK, NN, PP

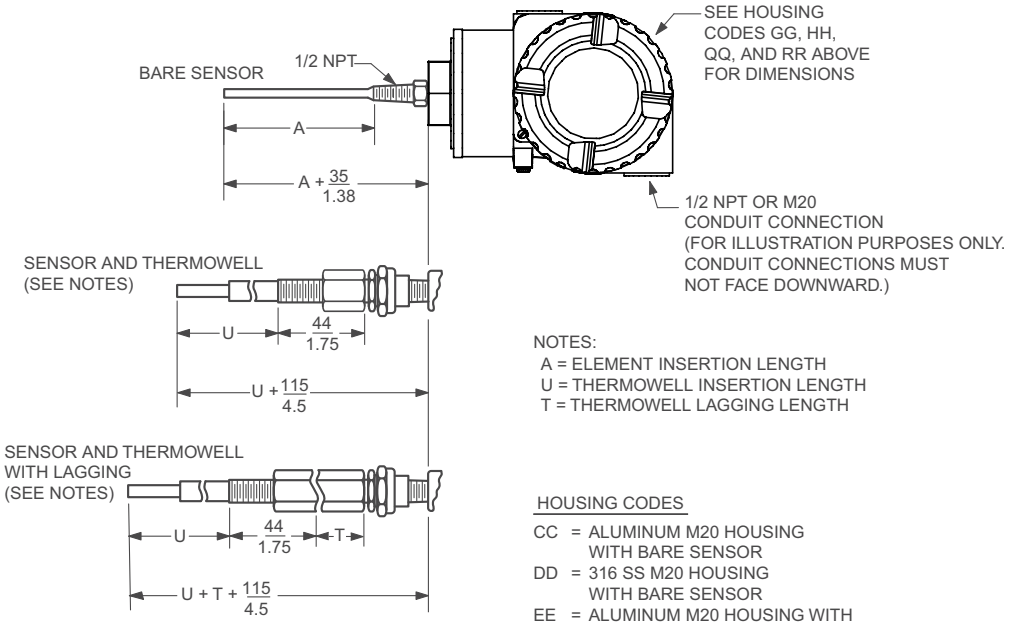

NOTES:
A = ELEMENT INSERTION LENGTH
U = THERMOWELL INSERTION LENGTH
T = THERMOWELL LAGGING LENGTH

HOUSING CODES

CC = ALUMINUM M20 HOUSING WITH BARE SENSOR
DD = 316 SS M20 HOUSING WITH BARE SENSOR
EE = ALUMINUM M20 HOUSING WITH SENSOR AND THERMOWELL
FF = 316 SS M20 HOUSING WITH SENSOR AND THERMOWELL
JJ = ALUMINUM 1/2 NPT HOUSING WITH BARE SENSOR
KK = 316 SS 1/2 NPT HOUSING WITH BARE SENSOR
NN = ALUMINUM 1/2 NPT HOUSING WITH SENSOR AND THERMOWELL
PP = 316 SS 1/2 NPT HOUSING WITH SENSOR AND THERMOWELL

Proposition 65

WARNING: This product can expose you to chemicals including lead and lead compounds, which are known to the State of California to cause cancer and birth defects or other reproductive harm. For more information go to www.P65Warnings.ca.gov.

Schneider Electric Systems USA, Inc.
70 Mechanic Street
Foxboro, Massachusetts 02035–2040
United States of America

https://www.se.com
Global Customer Support: https://pasupport.se.com

As standards, specifications, and design change from time to time, please ask for confirmation of the information given in this publication.

© 2012 – 2025 Schneider Electric. All rights reserved.

PSS 2A-1F8 A, Rev M