Temperature

RTT80 Temperature Transmitter with FOUNDATION™ Fieldbus

Product Specification

PSS 2A-1F8 B, Rev. G

July 2025



https://www.se.com

Schneider Electric

Legal Information

The information in this document contains general descriptions, technical characteristics, and/or recommendations related to products/solutions.

This document is not intended as a substitute for a detailed study or operational and site-specific development or schematic plan. It is not to be used for determining suitability or reliability of the products/solutions for specific user applications. It is the duty of any such user to perform or have any professional expert of its choice (integrator, specifier or the like) perform the appropriate and comprehensive risk analysis, evaluation and testing of the products/solutions with respect to the relevant specific application or use thereof.

The Schneider Electric brand and any trademarks of Schneider Electric SE and its subsidiaries referred to in this document are the property of Schneider Electric SE or its subsidiaries. All other brands may be trademarks of their respective owner.

This document and its content are protected under applicable copyright laws and provided for informative use only. No part of this document may be reproduced or transmitted in any form or by any means (electronic, mechanical, photocopying, recording, or otherwise), for any purpose, without the prior written permission of Schneider Electric.

Schneider Electric does not grant any right or license for commercial use of the document or its content, except for a non-exclusive and personal license to consult it on an "as is" basis.

Schneider Electric reserves the right to make changes or updates with respect to or in the content of this document or the format thereof, at any time without notice.

To the extent permitted by applicable law, no responsibility or liability is assumed by Schneider Electric and its subsidiaries for any errors or omissions in the informational content of this document, as well as any non-intended use or misuse of the content thereof.

Overview

The Model RTT80 is a microprocessor-based temperature transmitter with FOUNDATION™ Fieldbus Communication Protocol. It receives input signals from thermocouples, RTDs, resistance (ohm), or voltage (mV) sources.

Features

- Supports long-term stability from microprocessor-based technology.
- One unit configurable for a variety of Thermocouple (TC) and Resistance Temperature Detector (RTD) inputs.
- Supports 2-, 3-, or 4-wire RTDs.
- Allows average or difference measurement.
- Automatic sensor backup - a second sensor starts measuring temperature if the primary sensor is not functioning correctly.
- Temperature-dependent switching between sensors which are used in different measuring ranges.
- FOUNDATION™ Fieldbus H1, 31.25 kBits/s.
- Fieldbus Foundation Interoperability tested (complies with ITK 6.1.0) and registered with the Fieldbus Foundation.
- Link Master capable.
- Features multiple function blocks to support control in the field.
- Drift alert or alarm if the deviation between sensor 1 and sensor 2 is less than or greater than a predefined limit value.
- Sensor corrosion detection.
- Thermocouple cold junction compensation.
- Galvanic isolation 2 kV input to output.
- Rich on-board diagnostics.
- Optional digital indicator.
- Available as a basic module that can mount to a surface or DIN rail, or in an explosion-proof dual compartment housing for remote mounting, and integral sensor and thermowell mounting.
- Available with a wide selection of sensors and thermowells.
- Conforms to applicable European Union Directives (product marked with “CE” logo).
- EMC immunity per EU Directive IEC 61000.
- Compliant with NAMUR NE 21 criterion for EMC.
- Meets many testing agency requirements for hazardous area installations.

- Standard two year warranty.

General Description

The RTT80 provides a wide range of packaging selections, sensor types, and options along with the FOUNDATION Fieldbus communication protocol, thus making this transmitter suitable for most temperature measurement applications. The microprocessor-based electronics minimizes ambient temperature effects and results in high accuracy, repeatability, and linearization of the sensor signal.

Intelligent Temperature Transmitter Family

The RTT80 is part of the intelligent temperature transmitter family, which also includes Model RTT15. The RTT80 is also offered with the HART communication protocol; see PSS 2A-1F8 A.

Multiple Packaging Configurations

The transmitter is offered in a basic module package or with dual-compartment housing selections.

The DIN B size basic transmitter module is intrinsically safe and is offered for replacement or spare parts purposes, for mounting to a surface, or for mounting to a DIN rail using a simple clip. Alternately, you can select a dual-compartment housing, which isolates and seals the wiring terminals from the electronics compartment. Both housing options provide built-in protection from vibration and RFI.

You can mount a transmitter with an integral sensor (and thermowell, if desired) directly to the process. Surface- and pipe-mounted configurations allow the transmitter to be mounted remotely from the process. See Figure 1 for transmitter configurations.

Efficient and Durable

Industrial-grade integrated circuits and sealed electronics combine to make this microprocessor-based transmitter an efficient and durable device.

Rugged Sensors

The sensors are of high quality and rugged construction, and provide maximum accuracy and longevity. Sensors designed for use with thermowells include a spring loading mechanism that helps ensure continuous contact between the sensor tip and thermowell.

Input Types

The RTT80 is a configurable temperature field transmitter with either one or two temperature sensor inputs for 2-, 3-, and 4-wire resistance temperature detectors (RTD), thermocouples (TC), and resistance and voltage transmitters. The following is a general list of transmitter input types:

- Platinum RTDs, 2-, 3-, and 4-wire
- Nickel RTD, 3-wire
- Thermocouples
- Millivolt
- Ohm

Output Types

RTT80 outputs include:

- Single measurement or dual measurement configured as average, difference, or redundant measurements
- Automatic sensor backup - a second sensor starts measuring temperature if the primary sensor is not functioning correctly
- Temperature-dependent switching between sensors that are used in different measuring ranges
- Drift alert or alarm if sensor 1 and 2 deviate from one another
- Output units can be configured for various temperature units, ohms, or millivolts.

Figure 1. Available Housing and Sensor Mounting Codes

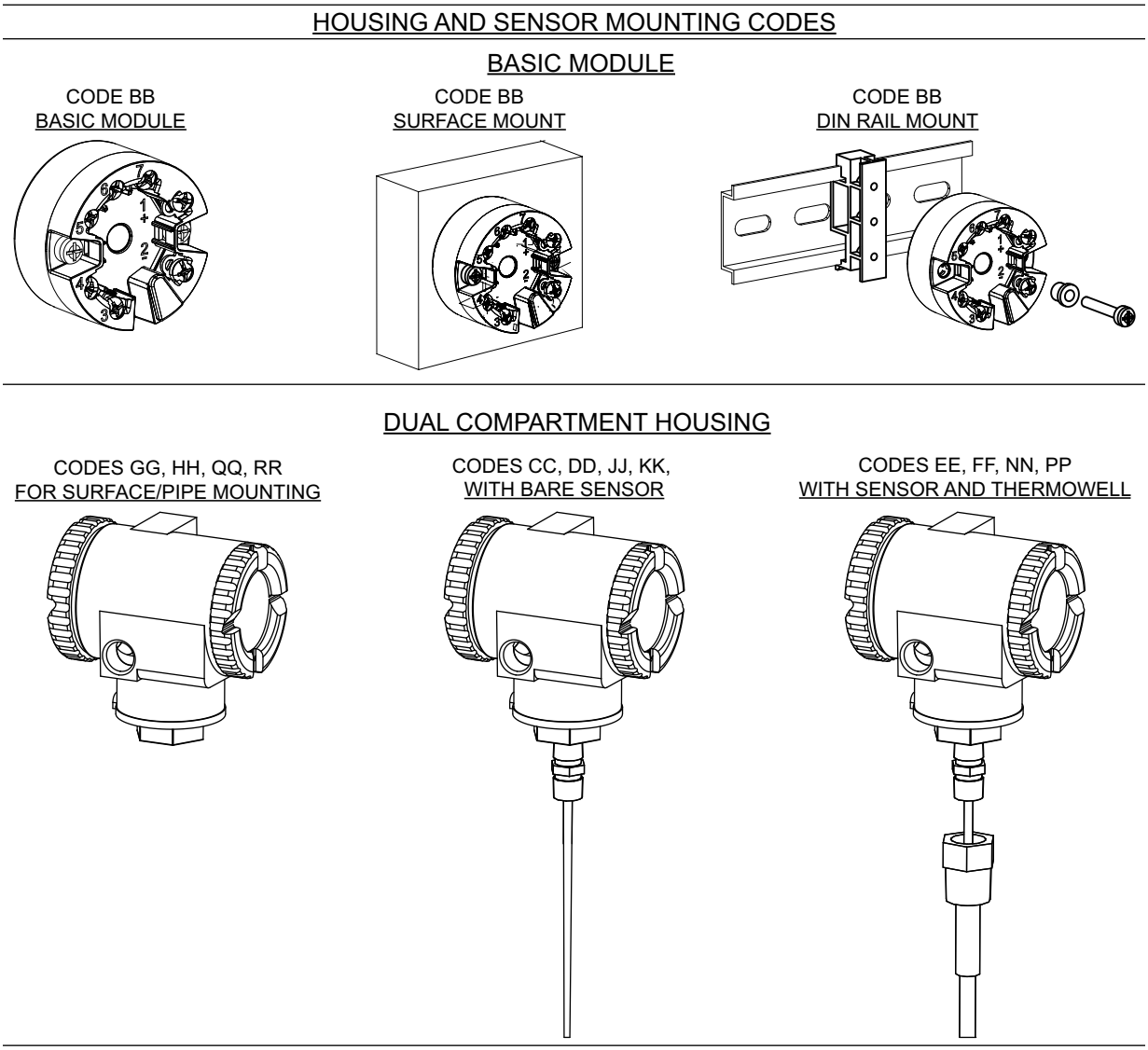

Foundation Fieldbus Interface

The RTT80-F complies with H1, IEC 61158-2, and current consumption is ≤ 11 mA. The data transmission rate is 31.25 kBits/s with Manchester II signal encoding. Function blocks featured are: Sensor 1 and Sensor 2 Transducer blocks, an Advanced Diagnostics Transducer block, a Display Transducer block, three AI (Analog Input) blocks and three additional AI blocks that can be instantiated, a PID (Proportional, Integral, Derivative) block, and an Input Selector block.

The RTT80-F also supports Link Master functionality, and is offered with Device Descriptors (DDs) and Field Device Tool DTM support.

Galvanic Isolation

2 kV ac Galvanic isolation is provided between input and output.

Transmitter Diagnostics

Standard available diagnostics include:

- Ambient operating temperature out of range detection
- Internal electronics diagnostic error detection
- Wiring error detection
- Sensor cable open circuit or short circuit detection
- Measurement over range and under range detection
- Sensor corrosion detection

Corrosion Detection

Corrosion of the sensor connections can lead to corruption of the measured value. The transmitter can detect corrosion on thermocouples and RTDs with a 4-wire connection before measured value corruption occurs. The transmitter avoids false measurement readings and is also able to indicate an alert on the display when wire resistance exceeds reasonable values.

Usable in Hazardous Area Locations

The Model RTT80 Temperature Transmitter meets the requirements of many certifying agencies for use in hazardous area locations. Refer to “Electrical Certifications” on page 20 for further details.

EMI and NAMUR Compatibility

Complies with the Electromagnetic Compatibility requirements of European EMC Directive 2004/108/EC, and NAMUR Standard NE 21. See “Performance Specifications” on page 10.

Operating, Transportation, and Storage Conditions

Influence (a)	Operative Limits	Transportation and Storage Limits
Ambient Temperature (b) Transmitter and Display	-40 and +85°C (-40 and +185°F) (c)	-40 and +100°C (-40 and 212°F)
Relative Humidity Transmitter and Display	0 and 95% (Noncondensing)	0 and 95% (Noncondensing)
Supply Voltage (d)	9 and 32 V dc (c)	Not Applicable
Vibration: Basic Transmitter Module, Housing and Sensor Mounting Code BB	10 to 2000 Hz for 5 “g” per IEC 60 068-2-6	1070 mm (42 in) drop in shipping container
Vibration: Housing and Sensor Mounting Codes CC, EE, GG, JJ, NN, QQ	19 mm (0.75 in) Double Amplitude from 5 to 9 Hz, 0 to 30 m/s^2 (0 to 3 “g”) from 9 to 500 Hz	
Vibration: Housing and Sensor Mounting Codes DD, FF, HH, KK, PP, RR	10 m/s^2 (1 “g”) maximum.	

a. Under Reference Operating Conditions unless otherwise specified.

b. To help ensure proper operation, the ambient temperature limits at the housing must not be exceeded. This is particularly relevant when sensors/thermowells are directly connected to the housing and very high process temperatures are being measured. The transfer of heat from the process to the housing can be minimized by use of thermowell extensions, or in extreme cases, by using a remote housing installation.

c. Refer to “Electrical Certifications” on page 20 for a restriction in ambient temperature with certain agency approvals/certifications.

d. Maximum voltage is 35 V dc.

Performance Specifications(1)

Reference Operating Conditions

Performance specifications apply under the following reference operating conditions, unless otherwise specified:

- Cal Temp: +25°C ±5 K (77°F ±9°F)
- Supply Voltage: 24 V dc
- 4-wire circuit for resistance adjustment

Response Time

1 s per channel, depending on the type of sensor and connection method.

Resolution

Resolution A/D converter = 18 bit

Measurement Accuracy

Sensor Type	Sensor Designation	Measurement Accuracy
RTD	Cu100, Pt100, Ni100, Ni120 Pt500 Cu50, Pt50, Pt1000, Ni1000 Cu10, Pt200	0.1°C (0.18°F) 0.3°C (0.54°F) 0.2°C (0.36°F) 1°C (1.8°F)
Thermocouple	Types E, J, K, L, T, U Types N, C, D Types B, R, S	Typical 0.25°C (0.45°F) Typical 0.5°C (0.9°F) Typical 1.0°C (1.8°F)
Input Source	**Measurement Range**	**Measurement Accuracy**
Resistance Transmitter	10 to 400 Ω 10 to 2000 Ω	±0.04 Ω ±0.8 Ω
Voltage Transmitter	-20 to +100 mV	±10 µV

Non-Repeatability

Input		Non-Repeatability
10 to 400 Ω	Cu10, Cu50, Cu100, Pt50, Pt100, Ni100, Ni120	15 mΩ
10 to 2000 Ω	Pt200, Pt500, Pt1000, Ni1000	100 ppm * measured value
-20 to +100 mV	Thermocouple Types C, D, E, J, K, L, N, U	4 µV
-5 to 30 mV	Thermocouple Types B, R, S, T	3 µV

1. All performance specifications apply to the transmitter only. Any detected error messages associated with the thermocouple or RTD sensors, or any other millivolt or resistance sensors are additive. For sensor performance specifications, refer to PSS 1-1B6 A for the thermocouples, PSS 1-1B1 A for RTDs, and PSS 3-3E1 A for PRMTA configurable sensors.

Ambient Temperature Effect (Temperature Drift)

Ambient temperature effect values listed below are for a 1 K change in ambient temperature within operative limits.

- 10 to 400 Ω Input: 0.001% of measured value, minimum of 1mΩ
- 10 to 2000 Ω Input: 0.001% of measured value, minimum of 10mΩ
- -20 to +100 mV Input: 0.001% of measured value, minimum of 0.2 µV
- -5 to +30 mV Input: 0.001% of measured value, minimum of 0.2µV

Long Term Stability

≤ 0.1°C (0.18°F) per year in reference operating conditions

Sensitivity

Table 1. Sensor Input Range

Sensor Type	Input Range
RTD: Cu10, Cu50, Cu100, Ni100, Ni120, Pt50, Pt100	10 to 400 Ω
RTD: Ni1000, Pt200, Pt500, Pt1000	10 to 2000 Ω
Thermocouple: Types B, R, S, T	-5 to +30 mV
Thermocouple: Types C, D, E, J, K, L, N, U	-20 to +100 mV

Table 2. Typical Sensitivity of RTDs

RTD Type	Typical Sensitivity
Pt	0.00385 * R_{nom}/K
Cu	0.0043 * R_{nom}/K
Ni	0.00617 * R_{nom}/K

For example, for Pt100 RTD, typical sensitivity = (0.00385) * (100 Ω/K) = 0.385 Ω/K

Table 3. Typical Sensitivity of Thermocouples

Typical Sensitivity			
TC Type	Sensitivity	TC Type	Sensitivity
B	10 µV/K	L	55 µV/K
C	20 µV/K	N	35 µV/K
D	20 µV/K	R	12 µV/K
E	75 µV/K	S	12 µV/K
J	55 µV/K	T	50 µV/K
K	40 µV/K	U	60 µV/K

Compliance with European Union Directives

The transmitter, when installed in accordance with the applicable installation instruction (MI), complies with the EMC requirements of European EMC Directive 2004/108/EC by conforming to the following EN and IEC Standards: EN 61326-1, IEC 61000-4 (as listed below), and NAMUR Standard NE 21 (as listed below).

- Electrostatic Discharge per IEC 61000-4-2: 6 kV Cont., 8 kV air
- Radiated RF Immunity per IEC 61000-4-3:
  0.08 to 4.0 GHz; 10 V/m
- High Frequency Transient per IEC 61000-4-4:
  1 kV
- Switching and Indirect Lightning Transient (Surge) per IEC 61000-4-5:
  1 kV, asymmetrical
- Conducted RF Immunity per IEC 61000-4-6:
  0.01 to 80 MHz; 10 V
- Interference Immunity requirements per NAMUR NE 21.

Measuring Category

Measuring Category II per IEC 61010-1. The measuring category is provided for measurements at circuits with a direct electrical connection to the low voltage supply.

Degree of Contamination

Degree 2 contamination per IEC 61010-1

Climate Class

Per IEC 60654-1, Class C

Functional Specifications

Input Types, Ranges, and Limits

Table 4. Resistance Thermometers (RTD) Inputs

Type of Input	Designation	Measuring Range Limits	Min Span
Per IEC 60751 (α = 0.00385)	Pt100	-200 and +850°C	10 K
	Pt200	-200 and +850°C	10 K
	Pt500	-200 and +250°C	10 K
	Pt1000	-200 and +250°C	10 K
Per JIS C1604-81 (α = 0.003916)	Pt100	-200 and +649°C	10 K
Per DIN 43760 (α = 0.006180)	Ni100	-60 and +250°C	10 K
	Ni1000	-60 and +150°C	10 K
Per Edison Copper Winding No.15 (α = 0.004274)	Cu10	-100 and +260°C	10 K
Per Edison Curve (α = 0.006720)	Ni120	-70 and +270°C	10 K
Per GOST (α = 0.003911)	Pt50	-200 and +1100°C	10 K
	Pt100	-200 and +850°C	
Per GOST (α = 0.004280)	Cu50	-200 and +200°C	10 K
	Cu100		
–	Pt100 (Callendar-van Dusen)	10 and 400 Ω (a)	10 Ω
		10 and 2000 Ω	100 Ω
–	Nickel Polynomial	10 and 400 Ω	10 Ω
		10 and 2000 Ω	100 Ω
–	Copper Polynomial	10 and 400 Ω	10 Ω
		10 and 2000 Ω	100 Ω
Resistance Transmitter			
–	Resistance Ohms	10 and 400 Ω	10 Ω
		10 and 2000 Ω	100 Ω

a. The measuring range limits are specified by entering the limit values that depend on the coefficients A to C and R0.

Table 5. Thermocouple Inputs

Type of Input	Designation	Measuring Range Limits	Recommended Temp. Range	Min Span
Per IEC 584 Part 1	Type A (W5Re-W20Re)	0 and +2500°C	0 to 2000°C	50 K
	Type B (PtRh30-PtRh6) (a) (b)	40 and +1820°C	100 to 1500°C	50 K
	Type E (NiCr-CuNi)	-270 and +1000°C	0 to 750°C	50 K
	Type J (Fe-CuNi)	-210 and +1200°C	20 to 700°C	50 K
	Type K (NiCr-Ni)	-270 and +1372°C	0 to 1100°C	50 K
	Type N (NiCrSi-NiSi)	-270 and +1300°C	0 to 1100°C	50 K
	Type R (PtRh13-Pt)	-50 and +1768°C	0 to 1400°C	50 K
	Type S (PtRh10-Pt)	-50 and +1768°C	0 to 1400°C	50 K
	Type T (Cu-CuNi)	-260 and +400°C	-185 to +350°C	50 K

Table 5. Thermocouple Inputs (Continued)

Type of Input	Designation	Measuring Range Limits	Recommended Temp. Range	Min Span
Per ASTM E230/ E230M	Type C (W5Re-W26Re)	0 and 2315°C	0 to 2000°C	50 K
	Type D (W3Re-W25Re)	0 and 2315°C	0 to 2000°C	50 K
Per DIN 43710	Type L (Fe-CuNi)	-200 and +900°C	0 to 750°C	50 K
	Type U (Cu-CuNi)	-200 and +600°C	-185 to +400°C	50 K
Voltage Transmitter				
–	Millivolt (mV)	-20 and +100 mV	–	–

a. The detected measuring error will increase for temperatures lower than 300°C (572°F). See “Measurement Accuracy” on page 10.

b. When operation conditions are based on a large temperature range, the RTT80 offers the ability to split the range. For example, a Type S or R thermocouple can be used for the low range, while a Type B can be used for the upper range.

When assigning both sensor inputs, the following connection combinations are possible:

		Sensor 1			
		2-wire RTD	**3-wire RTD**	**4-wire RTD**	**Thermocouple**
Sensor 2	2-wire RTD	Ok	Ok	N/A	Ok
	3-wire RTD	Ok	Ok	N/A	Ok
	Thermocouple	Ok	Ok	Ok	Ok

Figure 2. Input Connections – Basic Transmitter

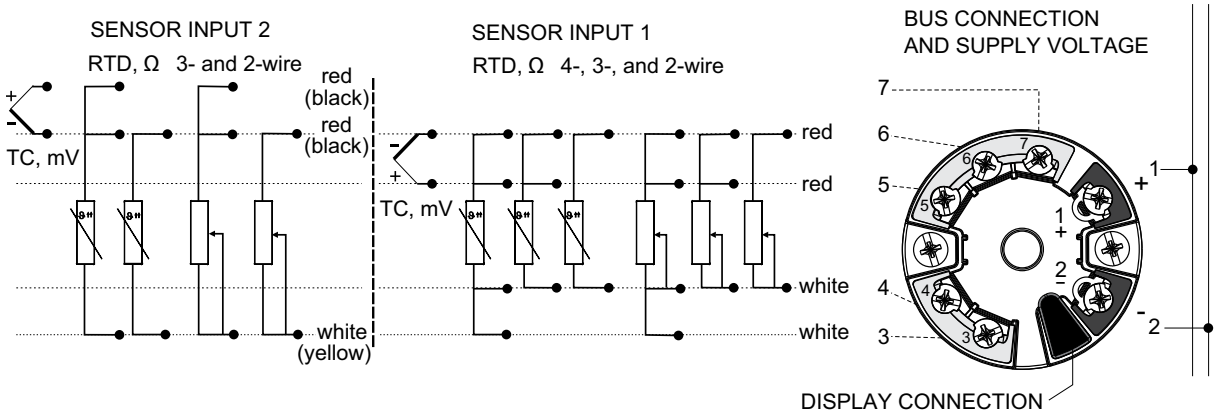

Figure 3. Dual Compartment Housing Wiring from the Terminal Block to the Module

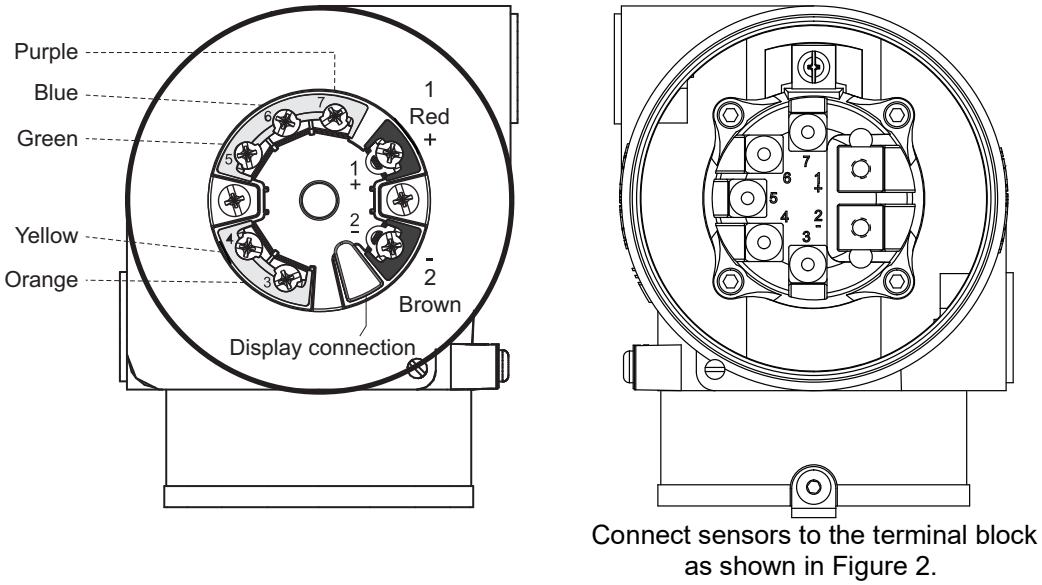

NOTE: The terminals for connecting the signal cable (1+ and 2-) are insensitive to reverse polarity.

Mains Voltage Filter

50/60 Hz

Galvanic Isolation

U = 2 kV ac (sensor input to output)

Current Consumption

≤ 11 mA

Switch-On Delay

8 s

Output Signal

- FOUNDATION™ Fieldbus H1, IEC 61158-2
- FDE (Fault Disconnection Electronic) = 0 mA
- Data transmission rate: supported baud rate = 31.25 kBit/s
- Communication distance: 1900 m (6235 ft.) maximum
- Signal coding = Manchester II
- Compliance with ITK 6.1.0

- Output data: values via AI blocks: temperature (PV), temp sensor 1 + 2, terminal temperature
- LAS (link active scheduler), LM (link master) function is supported. Thus, the RTT80 transmitter can assume the function of a link active scheduler (LAS) if the current link master (LM) is no longer available. The device is supplied as a BASIC device. To use the device as an LAS, this must be defined in the distributed control system and activated by downloading the configuration to the device.
- In accordance with IEC 60079-27, FISCO/FNICO

Block Execution

- Analog Input: 35 ms
- PID: 100 ms
- Input Selector: 35 ms

Write Protect Function

This function locks out all configurators from making transmitter configuration changes. This makes transmitter suitable for Safety Shutdown System Applications that require this feature. This feature is activated by a DIP switch on the optional local display.

Thermocouple (TC) Cold Junction Compensation

TC cold junction compensated via internal measurement, user-entered constant, or external RTD.

RTD Cable Resistance Compensation – Transmitter-to-Sensor

- 4-Wire RTD: Transmitter compensates for cable resistance changes due to ambient temperature changes.
- 3-Wire RTD: Transmitter compensates for cable resistance changes due to temperature, if cables are exposed to the same ambient temperature.
- 2-Wire RTD: Transmitter compensates for constant cable resistance. You can enter resistance value, or transmitter will measure it during setup.

Minimum Immersion

90 mm (3.5 in) is required to minimize detected thermal conduction errors

Thermocouples (TCs)[2]

- TC Type (TCs per ASTM E608) base metal types: E, J, K, L, N, T, and U
- Platinum metal types: B, R, and S
- Tungsten metal types: W3 and W5

Minimum Immersion

90 mm (3.5 in) is required to minimize detected thermal conduction errors

Thermowells

The thermowells listed in the “Model Code for RTT80-F” on page 21 are selections for industrial use. In addition, other high quality, polished thermowells in a variety of configurations, materials, and sizes are offered. Most application requirements can be met by choosing from the wide selection offered. See PSS 3-3D1 A for Type T thermowells, or contact Global Customer Support. See Figure 4 for a small sample of thermowells available.

Figure 4. Typical W-Series and T-Series Thermowells

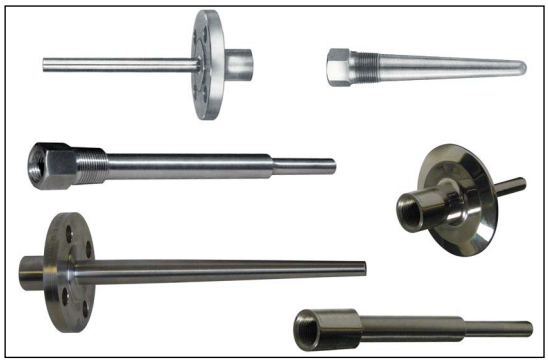

2. TCs listed are available assembled to RTT80 Transmitter. The transmitter can also be configured for other TC types.

Physical Specifications

Mounting

The basic transmitter module can be mounted to a DIN rail using the optional mounting clip and self-tapping screw. The basic module can also be mounted to a surface using user-supplied hardware. See “Dimensions - Nominal” on page 24.

The transmitter enclosed in the dual compartment housing (without integral sensors) can be remote mounted to a surface or nominal DN 50 or 2-inch pipe using an optional mounting bracket. See “Dimensions - Nominal” on page 24.

Transmitter Housings

Housing Code	Material and Finish	IEC/NEMA Rating	Explosion-proof and Flameproof	Mounting Configuration	Field Wiring Entrances on Housing
Basic Module					
BB	Encapsulated plastic	IP20 (a)	No	Basic Transmitter Module (b) (DIN Form B package)	None
Dual Compartment Housing					
CC	Low copper aluminum alloy; epoxy coated	IP66/67 NEMA 4X	Yes	With integral bare sensor	M20
DD	Stainless steel	IP66/67 NEMA 4X	Yes	With integral bare sensor	M20
EE	Low copper aluminum alloy; epoxy coated	IP66/67 NEMA 4X	Yes	With integral sensor and thermowell	M20
FF	Stainless steel	IP66/67 NEMA 4X	Yes	With integral sensor and thermowell	M20
GG	Low copper aluminum alloy; epoxy coated	IP66/67 NEMA 4X	Yes	For surface or pipe mounting, remote sensor	M20
HH	Stainless steel	IP66/67 NEMA 4X	Yes	For surface or pipe mounting, remote sensor	M20
JJ	Low copper aluminum alloy; epoxy coated	IP66/67 NEMA 4X	Yes	With integral bare sensor	1/2 NPT
KK	Stainless steel	IP66/67 NEMA 4X	Yes	With integral bare sensor	1/2 NPT
NN	Low copper aluminum alloy; epoxy coated	IP66/67 NEMA 4X	Yes	With integral sensor and thermowell	1/2 NPT
PP	Stainless steel	IP66/67 NEMA 4X	Yes	With integral sensor and thermowell	1/2 NPT
QQ	Low copper aluminum alloy; epoxy coated	IP66/67 NEMA 4X	Yes	For surface or pipe mounting, remote sensor	1/2 NPT
RR	Stainless steel	IP66/67 NEMA 4X	Yes	For surface or pipe mounting, remote sensor	1/2 NPT

a. Although the basic module is encapsulated, it has exposed terminals that may not be protected from the environment.

b. The basic module is typically used for replacement and spares purposes; it can also be mounted to a surface or to a DIN rail using a clip (Option -D1).

Dimensions

Refer to “Dimensions - Nominal” on page 24 and to the Dimensional Print DP 020-580.

Approximate Transmitter Mass

Housing Codes	Housing Material	Direct or Remote Mounting	Approximate Mass			
			Standard		With Optional Display	
			kg	lb	kg	lb
Basic Transmitter Module						
BB	N/A	N/A	0.05	0.11	0.01	0.02
Dual Compartment Housing						
EE and NN (a) CC and JJ (b)	Aluminum	Direct	1.3	2.8	1.3	2.8
GG and QQ (c)		Remote	1.3	2.8	1.3	2.9
FF and PP (a) DD and KK (b)	316 ss	Direct	2.9	6.4	2.9	6.5
HH and RR (c)		Remote	2.9	6.5	3.0	6.6

a. Includes module, but sensor and thermowell mass and connecting hardware not included.
b. Includes module, but bare sensor mass and connecting hardware not included.
c. Surface or pipe mount housing; remote sensor.

Electrical Certifications

The transmitter has been designed to meet the descriptions listed in the table below. Contact Global Customer Support for information on status of testing laboratory approvals or certifications. Refer to the Instruction Manual for application conditions and connectivity requirements.

Testing Laboratory, Type of Protection, and Area Classification	Model Code Option
CSA IS, I/1+2/ABCD	CA
CSA NI, 1/2/ABCD	CN
CSA Explosionproof, Class I, Division 1, BCD; Dust-ignitionproof, Class II, Division 1, EFG, Class III, Division 1. Also, zone certified, Cl I, Zone 1, Ex d IIC (a)	CD
ATEX II 1G Ex ia IIC T6…T4 Ga II 2G Ex ia IIC T6…T4 Gb (a)	AA
ATEX II 2 G Ex db IIC T6 Gb Ta = -40°C to +70°C; IP66/67 II 2 D Ex tb IIIC T85°C Db Ta = -40°C to +70°C; IP66/67 (a)	AD
IECEx Ex ia IIC T6…T4 Ga Ex ia IIC T6…T4 Gb (a)	EA
IECEx Ex db IIC T6 Gb Ta= -40°C to +70°C IP66/67 Ex tb IIIC T85°C Db Ta= -40°C to +70°C IP66/67 (a)	ED
FM IS, I/1+2/ABCD	FA
FM NI, I/2/ABCD	FN
FM Explosionproof, Class I, Division 1, Groups B, C, and D; Dust-ignitionproof, Class II, Division 1, Groups E, F, and G, Class III Division 1 (a)	FD
Non-hazardous area	ZZ

a. Not available with the basic module (Housing and Sensor Mounting Code BB).

Model Code

Table 6. Model Code for RTT80-F

Model	Description
RTT80	RTT80 Temperature Transmitter
	Communications
-F	FOUNDATION Fieldbus digital communications
	Input/Output Configuration
1	Configured for Single Sensor Input
2	Configured for Dual Sensor Input – PV is Sensor 1 (a)
3	Configured for Dual Sensor Input – PV is average of Sensor 1 and Sensor 2 (a)
4	Configured for Dual Sensor Input – PV is difference between Sensor 1 and Sensor 2 (a)
5	Configured for Dual Sensor Input – Sensor 2 is backup for Sensor 1 (a)
6	Configured for Dual Sensor Input – PV is average with sensor backup (a)
	Housing and Sensor Mounting
BB	Basic Module for DIN Rail or Surface Mounting or Replacement
JJ	Dual compartment aluminum housing, 1/2 NPT conduit with sensor (b)
KK	Dual compartment ss housing, 1/2 NPT conduit with sensor (b)
NN	Dual compartment aluminum housing, 1/2 NPT conduit with sensor and thermowell mounting (b)
PP	Dual compartment ss housing, 1/2 NPT conduit with sensor and thermowell mounting (b)
QQ	Dual compartment aluminum housing, 1/2 NPT conduit for use with remote sensor (c)
RR	Dual compartment ss housing, 1/2 NPT conduit for use with remote sensor (c)
CC	Dual compartment aluminum housing, M20 conduit with sensor (b)
DD	Dual compartment ss housing, M20 conduit with sensor (b)
EE	Dual compartment aluminum housing, M20 conduit with sensor and thermowell mounting (b)
FF	Dual compartment ss housing, M20 conduit with sensor and thermowell mounting (b)
GG	Dual compartment aluminum housing, M20 conduit for use with remote sensor (c)
HH	Dual compartment ss housing, M20 conduit for use with remote sensor (c)
	Input Measurement Type (d)
B	Thermocouple, Type B (e)
C	Thermocouple, Type C (e)
D	Thermocouple, Type D (e)
E	Thermocouple, Type E
J	Thermocouple, Type J
K	Thermocouple, Type K
L	Thermocouple, Type L (e)
N	Thermocouple, Type N
R	Thermocouple, Type R (e)
S	Thermocouple, Type S (e)
T	Thermocouple, Type T
U	Thermocouple, Type U (e)
2	2-wire RTD, 100 ohm platinum IEC 751 (ASTM-B Standard Accuracy) (e)
Q	3-wire RTD, 100 ohm platinum IEC 751 (ASTM-B Standard Accuracy)
4	4-wire RTD, 100 ohm platinum IEC 751 (ASTM-B Standard Accuracy) (f)
A	3-wire RTD, 100 ohm platinum IEC 751 (ASTM-A High Accuracy)
6	4-wire RTD, 100 ohm platinum IEC 751 (ASTM-A High Accuracy) (f)
F	3-wire RTD, 100 ohm nickel DIN 43760 (e)
P	Ohms input
M	Millivolt input
W	3-wire RTD Platinum (Callendar-van Dusen)
Z	Other (factory configuration for an Input Measurement Type not listed above) (g)
	Thermowell Assembled to Housing
NA	No Thermowell or Thermowell is supplied separately (h)
TK	Thermowell Series “T-” assembled to housing; specify child thermowell (i)

Table 6. Model Code for RTT80-F

Model	Description
	Hazardous Area Certifications (j)
ZZ	Non-hazardous area
CA	CSA IS, I/1+2/ABCD
CN	CSA NI, 1/2/ABCD
CD	CSA Explosionproof, Class I, Division 1, BCD; Dust-ignitionproof, Class II, Division 1, EFG, Class III, Division 1. Also zone certified, CL I, Zone 1, EX d IIC (k)
AA	ATEX II 1G Ex ia IIC T4/T5/T6
AD	ATEX II G Ex db IIC T6 Gb (k)
EA	IECEx Ex ia IIC T4/T5/T6 (k)
ED	IECEx Ex db T6 Gb (k)
FA	FM IS, I/1+2/ABCD
FN	FM NI, I/2/ABCD
FD	FM Explosionproof, Class I, Division 1, Groups B, C, and D; Dust-ignitionproof, Class II, Division 1, Groups E, F, and G, Class III Division 1 (k)
	Optional Selections
	Housing Features
-A1	Custody Transfer Lock and Seal (k)
-A3	Metric M20 Conduit Adapter (1/2 NPT by M20x1.5)
	Housing Connection to Thermowell
-S3	Stainless Steel Union and Fittings (l)
	Mounting Sets
-M3	Mounting Set for Dual Compartment Housing – Painted Steel (m)
-M4	Mounting Set for Dual Compartment Housing – Stainless Steel (m)
-M5	Mounting Set for Dual Compartment Housing – Rugged Painted Steel (n)
-M6	Mounting Set for Dual Compartment Housing – Rugged Stainless Steel (n)
-D1	Clip for DIN rail mounting of the basic module
	Other Optional Features
-C2	Custom Database Configuration
-L1	With Local Indicator
-C5	Cleaned and Prepared for Oxygen Service (k)
-WF	Wake Frequency Calculations (o)
-N1	NACE Compliant Thermowell (o) (p)

a. Input measurement must be the same for both sensors. Dual 4-wire RTD is not permitted. Only Input 1 can be configured for 4-wire RTD.

b. This option initiates the PRMTA configurable sensor model code. If you are ordering a PRMTA configurable sensor, be sure that the RTT80 Input Measurement Type ordered matches the PRMTA Configurable Sensor Input Measurement Type.

c. Sensor ordered separately.

d. Transmitter is factory configured for the measurement type specified whether the sensor is included or not. You can change the configuration to a different type using appropriate configuration software for the selected protocol, or specify -C2 Option for custom factory configuration. On dual sensor input (Sensor Input = 2), both inputs are configured the same, unless specified via the -C2 configuration form.

e. Only available with the basic module or a module for use with a remote sensor (Housing and Sensor Mounting Codes BB, QQ, RR, GG, HH).

f. Only available with single sensor input (Input/Output Configuration Code 1).

g. This option requires selection of the Custom Database Configuration (Model Code Option -C2) under “Other Optional Features”.

h. This option is required for all housing options that are not configured for thermowells (Housing and Sensor Mounting Codes BB, JJ, KK, QQ, RR, CC, DD, GG, HH).

i. This option allows you to select a PRMTA configurable sensor with TT, TF, TS, or TW thermowell codes.

j. Transmitter has been designed to meet the electrical certifications listed in this table. Contact Global Customer Support for information and status of testing laboratory approvals or certifications

k. Not available with the basic module (Housing and Sensor Mounting Code BB).

l. Optionally available with aluminum housings configured for sensor and thermowell mounting (Housing and Sensor Mounting Codes EE, NN with Electrical Certification selections CA, CN, FA, FN, or ZZ). Standard with Housing and Sensor Mounting codes NN and EE with Electrical Certs AA, AD, CD, EA, ED, or FD. Standard on ss housings configured for sensor and thermowell mounting (Housing and Sensor Mounting Codes FF, PP).

m. Only available with aluminum dual compartment housings (Housing and Sensor Mounting Codes QQ, GG).

n. Required for ss dual compartment housings (Housing and Sensor Mounting Codes HH, RR) if a mounting set is desired. Also available with aluminum dual compartment housings (Housing and Sensor Mounting Codes QQ, GG) if a mounting set is desired.

o. Requires dual compartment housing with sensor and thermowell mounting options (Housing and Sensor Mounting Codes NN, PP, EE, FF).

p. Only available with Thermowell Option Code TK (“T-” thermowell assembled to housing).

Ordering Instructions

1. Model Number
2. Electrical Certification Model Code Option
3. Accessories
4. User Tag Information

Dimensions - Nominal

BASIC TRANSMITTER
HOUSING CODE BB

mm
in

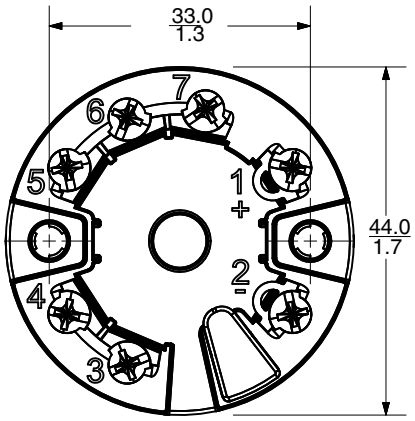

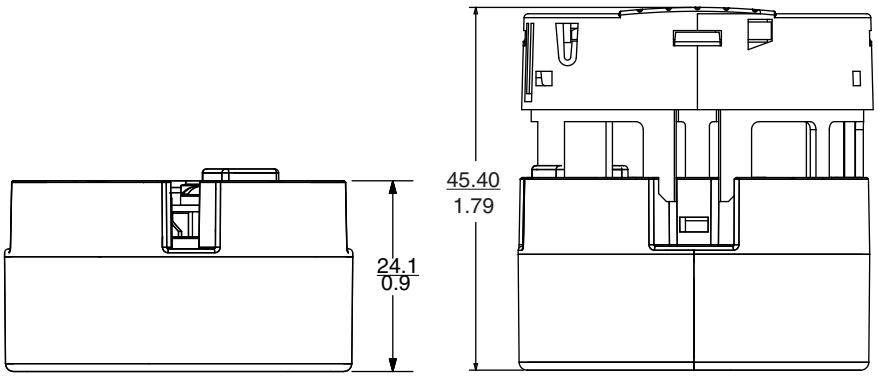

WITHOUT LCD INDICATOR

WITH LCD INDICATOR

DUAL COMPARTMENT HOUSING FOR SURFACE OR PIPE MOUNT WITH REMOTE SENSOR
HOUSING CODES GG, HH, QQ, AND RR

mm
in

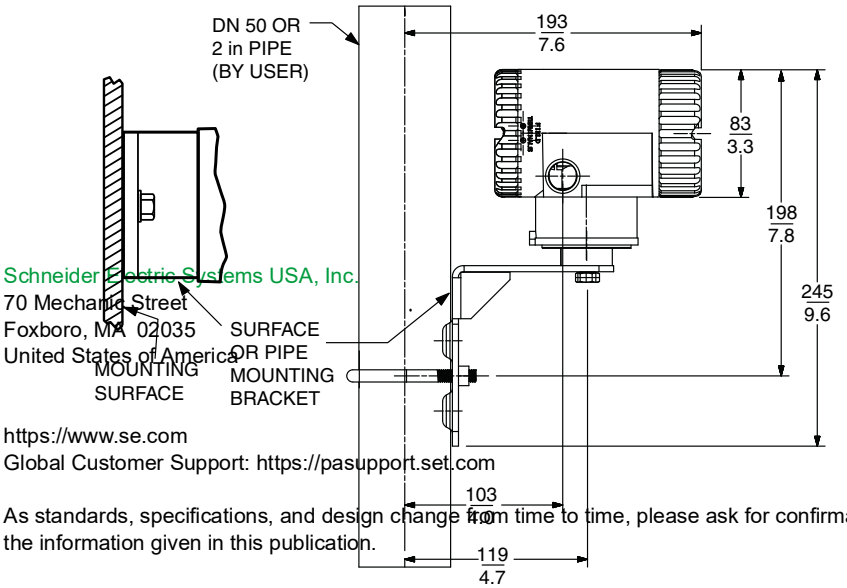

HOUSING CODES

GG = ALUMINUM M20 HOUSING FOR REMOTE SENSOR
HH = 316 SS M20 HOUSING FOR REMOTE SENSOR
QQ = ALUMINUM 1/2 NPT HOUSING FOR REMOTE SENSOR
RR = 316 SS 1/2 NPT HOUSING FOR REMOTE SENSOR

NOTES

1. ALLOW 51 mm (2 in) CLEARANCE FOR COVER REMOVAL.
2. EXTERNAL COVER LOCK AND GROUND SCREW WHEN APPLICABLE.

Schneider Electric Systems USA, Inc.
70 Mechanic Street
Foxboro, MA 02035
United States of America

https://www.se.com
Global Customer Support: https://pasupport.set.com

As standards, specifications, and design change from time to time, please ask for confirmation of the information given in this publication.

© 2014 - 2025 Schneider Electric Systems USA, Inc. All rights reserved.

PSS 2A-1F8 B, rev. G

mm
in

DUAL COMPARTMENT HOUSING WITH INTEGRAL SENSOR AND/OR SENSOR AND THERMOWELL
HOUSING CODES CC, DD, EE, FF, JJ, KK, NN, AND PP

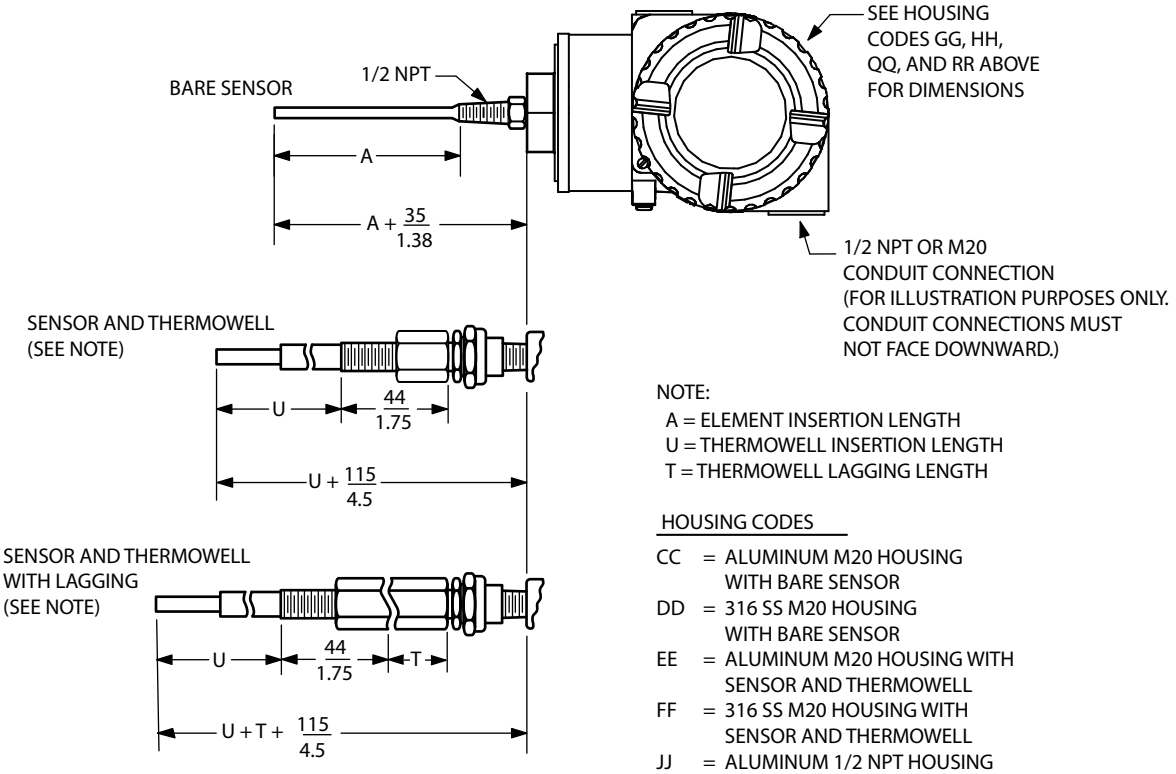

NOTE:
A = ELEMENT INSERTION LENGTH
U = THERMOWELL INSERTION LENGTH
T = THERMOWELL LAGGING LENGTH

HOUSING CODES

CC = ALUMINUM M20 HOUSING WITH BARE SENSOR
DD = 316 SS M20 HOUSING WITH BARE SENSOR
EE = ALUMINUM M20 HOUSING WITH SENSOR AND THERMOWELL
FF = 316 SS M20 HOUSING WITH SENSOR AND THERMOWELL
JJ = ALUMINUM 1/2 NPT HOUSING WITH BARE SENSOR
KK = 316 SS 1/2 NPT HOUSING WITH BARE SENSOR
NN = ALUMINUM 1/2 NPT HOUSING WITH SENSOR AND THERMOWELL
PP = 316 SS 1/2 NPT HOUSING WITH SENSOR AND THERMOWELL



WARNING: This product can expose you to chemicals including lead and lead compounds, which are known to the State of California to cause cancer and birth defects or other reproductive harm. For more information go to www.P65Warnings.ca.gov.

Schneider Electric Systems USA, Inc.
70 Mechanic Street
Foxboro, MA 02035
United States of America

https://www.se.com
Global Customer Support: https://pasupport.set.com

As standards, specifications, and design change from time to time, please ask for confirmation of the information given in this publication.

© 2014 - 2025 Schneider Electric Systems USA, Inc. All rights reserved.

PSS 2A-1F8 B, rev. G