Analytical Products

Model 876CR Intelligent Transmitter for Contacting Conductivity and Resistivity Measurement

Product Specification

PSS 6-3A2 A, Rev F

Otober 2026



https://www.se.com

Schneider Electric

Legal Information

The information provided in this document contains general descriptions, technical characteristics and/or recommendations related to products/solutions.

This document is not intended as a substitute for a detailed study or operational and site-specific development or schematic plan. It is not to be used for determining suitability or reliability of the products/solutions for specific user applications. It is the duty of any such user to perform or have any professional expert of its choice (integrator, specifier or the like) perform the appropriate and comprehensive risk analysis, evaluation and testing of the products/solutions with respect to the relevant specific application or use thereof.

The Schneider Electric brand and any trademarks of Schneider Electric and its subsidiaries referred to in this document are the property of Schneider Electric or its subsidiaries. All other brands may be trademarks of their respective owner.

This document and its content are protected under applicable copyright laws and provided for informative use only. No part of this document may be reproduced or transmitted in any form or by any means (electronic, mechanical, photocopying, recording, or otherwise), for any purpose, without the prior written permission of Schneider Electric.

Schneider Electric does not grant any right or license for commercial use of the document or its content, except for a non-exclusive and personal license to consult it on an “as-is” basis.

Electrical equipment should be installed, operated, serviced, and maintained only by qualified personnel. No responsibility is assumed by Schneider Electric for any consequences arising out of the use of this material.

Schneider Electric reserves the right to make changes or updates with respect to or in the content of this document or the format thereof, at any time without notice.

To the extent permitted by applicable law, no responsibility or liability is assumed by Schneider Electric and its subsidiaries for any errors or omissions in the informational content of this document, as well as any non-intended use or misuse of the content thereof.

Overview

The Model 876CR is a 2-wire loop powered intelligent transmitter that, when used with an appropriate electrochemical sensor, provides measurement, local display, and transmission of contacting conductivity, resistivity, or concentration. The transmitter outputs a HART digital signal and a 4 to 20 mA analog output.

Features

- 4 to 20 mA output with a HART(1) digital signal.
- Temperature prediction(2)
- Remote configuration/calibration with the HART Communicator or PC-based Configurator.
- Local configuration with the keypad on the integral local human interface.
- LCD indicator can display either one, two, or three measurement variables.
- Fault isolation to transmitter or sensor.
- Galvanically isolated output.
- Continuous transmitter/sensor diagnostics.
- Preprogrammed temperature curves, including temperature compensation for power and pharmaceutical industry applications.
- Approved/Certified as intrinsically safe device for use in hazardous area locations.
- FDT certified DTM (Device Type Manager).
- Auto-switching from a wide range to a very sensitive range without need for recalibration.
- Two levels of configurable passcode protection provided.
- Compatible with all Schneider Electric 871CC and 871CR conductivity and resistivity sensors.
- Complies with applicable NAMUR standards, and EMC directive 2014/30/EU.
- Enclosure meets IP66 and NEMA 4X ratings.
- Output hold.

Application Flexibility

Microprocessor technology, coupled with a simple user interface, allows rapid customization of the transmitter to specific application requirements. Contacting conductivity or resistivity applications can be handled by simple configuration of the transmitter to the desired measurement. Temperature compensation, for conductivity and resistivity measurement is equally flexible.

1. Usable with HART Versions 5, 6, and 7.
2. Patent pending.

Conductivity, Resistivity, or Concentration Measurement

The transmitter can be configured to measure in conductivity units (µS/m, µS/cm, mS/m, mS/cm, or S/m), resistivity units (MΩ•cm or KΩ•cm), or one of a host of chemical concentration units such as percent (%), grams per liter (g/L), parts per million (ppm), parts per thousand (ppt), and ounces per gallon (oz/gal). User programmable curves can also be used for special applications such as uncommon chemicals, proprietary processes, or non-binary solutions.

Customize and Employ up to Three Applications

This unique feature allows you to preconfigure the transmitter for up to three different applications. Each application may have its own display format, temperature compensation curve, chemical concentration curve (if applicable), and output configuration. Each application is assigned a number, for example, “Application 1”, “Application 2”, or “Application 3”. If you wish to switch from one application to another, you can simply change one parameter in the configuration menu and the entire application set switches in automatically. This is a powerful feature for users who frequently change between a handful of common, or even custom, recipes.

Auto-Switching

A useful extension to the multi-application feature is an auto-switching capability between either two or three applications. User-programmable switch limits determine when the transmitter auto-switches from Application 1 to Application 2, then again from Application 2 to Application 3. Similarly, the transmitter auto-switches in descending fashion depending on the program set by the user. Because each of the applications (three maximum) is individually configured, calibration constants are stored in memory and invoked as the application is retrieved. Thus the transmitter can switch from a wide range conductivity application to a very sensitive one (e.g., Rinse, Product, and CIP) without the need to recalibrate the system for the new range and compensations. This results in tremendous time savings for operators, and helps eliminate common sources of error in critical applications.

Configuration of Parameters

User configurable parameters are listed below.

Refer to MI 611-260 for the menu structure and further details of each parameter.

- Cell Configuration (Cell Constant, Temperature Sensor Type)
- Measurement Configuration (Units, Display Format, and Damping)

- Temperature Configuration (°C, °F, Automatic, or Manual mode)
- Temperature Compensation (Units for Different Solutions)
- Analog Output/PV (Source Measurement, Low/Upper Value, HART SV/TV/QV)
- Measurement Display (Single, Dual, Multiple (3) Measurements)
- Number of Applications (1, 2, or 3)
- Run Applications (Auto, Application 1, 2, or 3)
- Analog Output Failsafe (Off, Fail Low, Fail High)
- HART Digital (Versions 5, 6, or 7)
- Enable/Disable Diagnostics (Enable/Disable All, ATC Short/Open, Compensation/Measurement Range, Leakage)
- Auto Hold (Off, On Present, On Manual)
- Configuration Timeout (Never, Always, Online only)
- Restore Configuration (User1, User2, Factory)
- Stability (Stability during calibration)
- Passcode Access (Administrator Code, User Code, User Change, User View)
- Transmitter Tags (Device Name, Tag Name, Location, HART Message/Tag/ Long Tag/Descriptor)

Temperature Prediction

A proprietary mathematical algorithm is applied to accelerate the cell's response to changes in the process temperature. This reduces errors that may appear in the compensated measurements when the process temperature changes rapidly.

Save and Restore Configurations

Configuring an electrochemical transmitter involves the setting of many parameters specific for the application. For example, measurement, sensor configuration, temperature compensation, output, chemical composition, damping, and cell factor are just a few of the parameters that can be configured. In some cases, you may wish to employ the transmitter for more than one application (at different times). Rather than having to change several parameters, the Model 876CR allows you to save up to two unique and complete configuration profiles, each of which has three applications. Either of these two profiles can be restored at any time to facilitate a quick and easy change of the transmitter to a pre-saved configuration. In addition to the two user profiles, the transmitter also includes a "factory default" configuration which allows you to return the transmitter to its original factory configuration at any time.

Intrinsically Safe Design

The 876CR Transmitter complies with FM, CSA, ATEX, and IECEx standards for intrinsically safe apparatus in hazardous area locations. Also refer to “Electrical Certifications” on page 26.

Compatible with 871CR and 871CC Sensors

For optimum performance and ease of use, the 871CR Series Sensors (see Figure 1) are recommended. When a complete loop (analyzer plus sensor) is required, the 871CR Sensor is highly recommended. However, the installed base of 871CC sensors is very large, considering they were utilized on several previous models of conductivity and resistivity analyzers, including Models 870, 870IT, 872, 873, and 874. Therefore, the 876CR Transmitter was designed for compatibility with 871CC Sensors, and can replace an existing installation of Model 870, 870IT, 872, 873, or 874 instruments without changing sensor inventory.

Compatibility with 871CR and 871CC sensor types is achieved through programmable configuration of cell factor and temperature sensor parameters. The analyzer accepts temperature inputs from a 2- or 3- wire 100 Ω RTD, 2- or 3-wire 1000 Ω RTD, and from a 10 kΩ and a 100 kΩ thermistor.

Figure 1. 871CR and 871CC Series Sensors

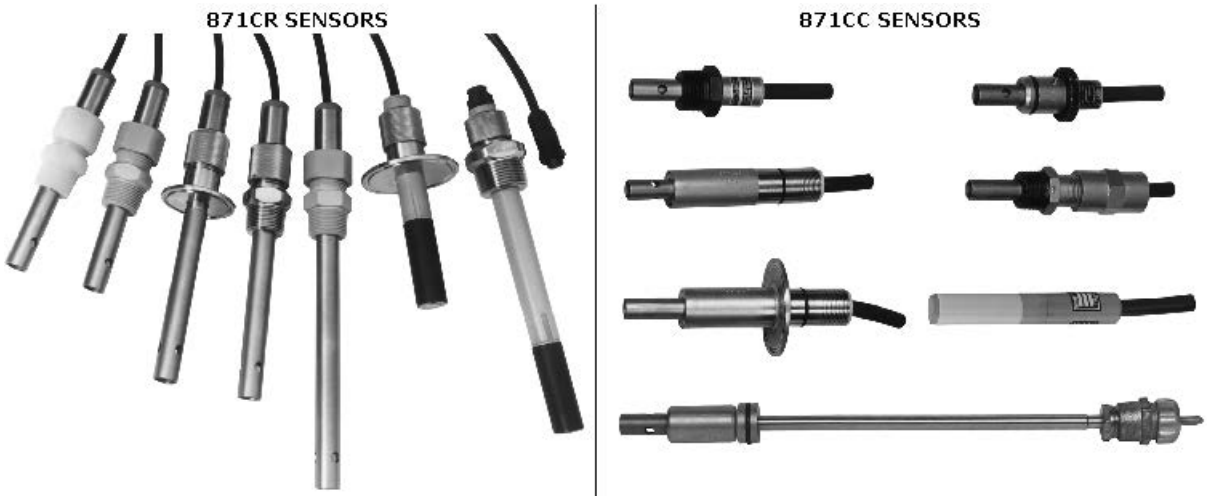

Local Human Interface

A local human interface, as shown in Figure 2, provides local display, diagnostics, and setup. The interface consists of a 128 x 64 dot matrix LCD, a 12-key alpha-numeric keypad, four directional arrows, and an ENTER key. Note that the user functions available via the local interface are also available through external interfaces.

Figure 2. Local Human Interface

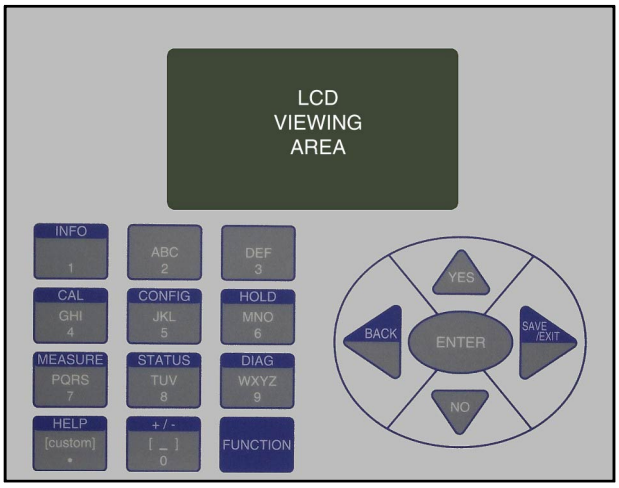

The UP and DOWN arrows are used to scroll through menu selections, which wrap from the last to the first item. HELP messages appear at the bottom of every display screen, except for measurement displays. If there is a fault, the fault symbol on the title bar will flash. When the transmitter is in HOLD, this is indicated in the upper right of the display (see Figure 4 for location of displays). There is also a full help display accessed via the HELP function key. Help displays also appear before each calibration operation. A typical diagnostics display is shown in Figure 3, and a typical dual measurement display is shown in Figure 4.

Figure 3. Typical Fault Display

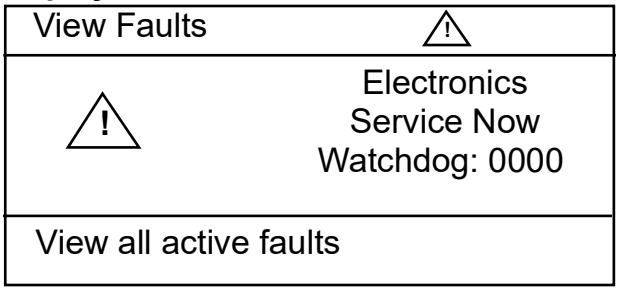

Figure 4. Typical Dual Measurement Display

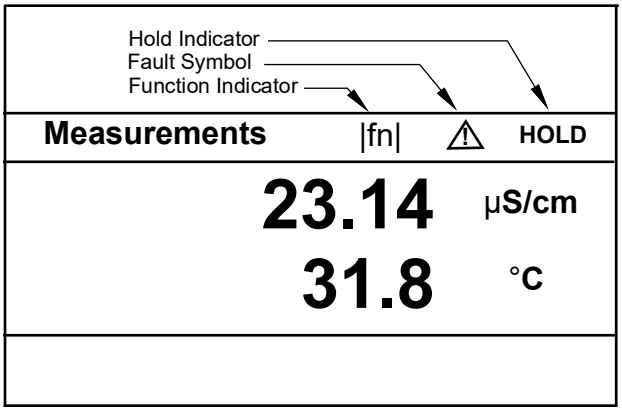

Display Size and Format

The LCD viewing area is 71 mm wide x 38.9 mm high (2.80 in wide x 1.53 in high), and displays Measurements, Status, Configuration settings, and Calibration settings. You may configure the interface to display one, two, or three measurements. Font sizes can be extra large, large, medium, or small depending on what is being displayed.

For example, a single measurement display (conductivity) has an extra large font size, while a dual measurement display (conductivity and temperature) has a large font size.

History Logs

You can view the history log and clear it. The history log can be viewed by using any of the four filters: an error selection, an operational selection, a calibration selection, and an all history selection. The history log includes all faults, power restore, entries, and exits from configuration, calibration and Hold, and faults that have been temporarily suspended.

Passwords for Data and Calibrations

Two levels of passwords help protect against unauthorized configuration/calibration changes, loss of data, and/or invalid measurement signals.

The first level permits access to routine maintenance functions, including calibration and output hold, but only permitted by the second level of password.

The second level permits changes to all configuration parameters by authorized personnel.

Data is stored in EEPROM, reducing the need for battery backup. Measurement loop security is enhanced by a user programmable “fail signal” parameter activated by any transmitter fault and certain serious sensor faults. This “fail signal” parameter forces the transmitter output to off-scale Fail High or Fail Low per NAMUR Standard NE 43.

High Sensitivity, Wide Range

Highly accurate measurements are provided by the combination of 876CR Transmitter and an 871CR Sensor. Refer to Table 2 and Table 4 for a listing of the wide variety of resistivity and conductivity ranges available.

Measurement Integration

This transmitter provides efficient integration of measurements into HART process control schemes. It operates by using a bidirectional digital signal superimposed on the 4 to 20 mA analog output.

Remote communication of digital values plus status and configuration information can be achieved via HART communication protocol.

Configurations used with this HART version are:

- The HART Communicator (users having HART Communicator for other devices can have them upgraded with DDs from Schneider Electric to accommodate this transmitter).
- The local Human Interface (see previous section).
- A PC-based configurator (FDT).
- A Distributed Control System (DCS).

With HART, digital multidropping is permitted. This is the connection of several transmitters to a single communication line. Multiple transmitters can be connected on a single twisted pair of wires. See Figure 7.

Quick and Informative Status

Using the status key, you can gain access to all the information necessary to assess the performance of the measurement loop. Among the parameters this “read only” key accesses are:

- Solution Temperature
- Absolute Measurement
- Compensated Measurement
- Chemical Concentration
- Measurement Status
- Date of Last Calibration

Sensor and Transmitter Diagnostics

The diagnostic mode enables you to view active faults, view history log, suspend faults, resume suspended faults, and save two user configurations. Typical faults include:

- Measurement Overrange
- Compensation Overrange and Underrange
- Analog Output Overrange and Underrange
- Sensor Faults
- Liquid Leakage into Sensor Body
- ATC Short and ATC Open

You can enable or disable some of the listed faults. Fault status is displayed in the main Diagnostic Menu. If there are no faults, then “No Active Faults” will be displayed. You can suspend active faults from the measurement status for one hour, and can resume faults at any time.

Durable Field-Mounted Enclosure

The 876CR is housed in a durable aluminum alloy enclosure that is designed to withstand severe field conditions. The enclosure has the dusttight and weatherproof rating of IP66 as defined by IEC 60529, and provides the environmental and corrosion-resistant protection rating of NEMA 4X.

Its efficient DIN panel-size design allows easy mounting for panel, pipe, or surface applications. A hinged front door provides easy front access to field connections. Large spade lug terminals for sensor and communication connections facilitate quick maintenance and calibration procedures. The keypad overlay is constructed of polyester material.

The transmitter can also be provided with an optional clear plastic storm door to help prevent accidental activation of the front panel controls.

Operating, Transportation, and Storage Conditions

Influence	Reference Operating Conditions	Normal Operating Conditions	Transportation and Storage Limits
Electronic Ambient Temperature	23 ± 2°C (73 ± 4°F)	-30 to +70°C (a) (-22 to +158°F)	-30 and +70°C (-22 and +158°F)
Display Ambient Temperature	23 ± 2°C (73 ± 4°F)	-20 to +70°C (a) (b) (-4 to +158°F)	-30 and +70°C (-22 and +158°F)
Relative Humidity	50 ± 10%	5 to 90% (c) Noncondensing	5 and 90% Noncondensing
Supply Voltage Over 4 to 20 mA 2-Wire Line	24 ± 2 V dc	12.8 to 42 V dc See Figure 5	Not Applicable
Output Load	250 Ω	0 to 1300 Ω (Figure 5)	Not Applicable
Isolation	±1 V dc	For Intrinsically Safe Applications: ±24 V dc For General Purpose (Ordinary) Locations: ±42 V dc	Not Applicable
Vibration	Negligible	For Panel Mounting: 2.5 m/s^2 (0.25 “g”) from 5 to 200 Hz For Pipe or Surface Mounting: 10 m/s^2 (1 “g”) from 5 to 200 Hz	Protect with Shipping Container

a. Refer to “Electrical Certifications” on page 26 for a restriction in ambient temperature with certain electrical certifications.
b. The LCD Indicator may be more difficult to read and slower to update between -20 and -30°C (-4 and -22°F).
c. The transmitter will operate at a low limit of 0% RH but with a possible degradation of performance.

Performance Specifications

(Transmitter Specifications under Reference Operating Conditions unless otherwise specified. Refer to Sensor Literature for Sensor Specifications.)

Accuracy

Accuracy of Digital Measurement (Includes Linearity, Hysteresis, and Repeatability)

Absolute Conductivity and Resistivity Measurement: ± 0.5% of absolute reading over the input range of 40 Ω to 10 MΩ. Measurements are possible outside this range, display format permitting, but accuracy may be reduced.:

Table 1. Digital Accuracy Examples

Cell Factor (CF) (cm^{-1})	0.5% Accuracy Range (a)
0.1	0.0100 to 2500 µS/cm 0.0004 to 100.0 MΩ•cm
1.0	0.0001 to 25.00 mS/cm 0.0400 to 9999 kΩ•cm
10	0.0010 to 250.0 mS/cm 0.0040 to 999.9 kΩ•cm

a. 1.0% with 28°C (50.4°F) transmitter temperature change.

Accuracy of Analog Output

Analog output accuracy is equal to the digital measurement accuracy plus an additional 0.04% of full span (4 to 20 mA).

Accuracy of Solution Temperature at 25°C/77°F Reference

Temperature Sensor Type	Accuracy
3-Wire 1000 Ω Platinum RTD	±0.03°C (±0.05°F)
3-Wire 100 Ω Platinum RTD	±0.1°C (±0.18°F)
2-Wire 1000 Ω Platinum RTD	±0.3°C (±0.5°F)
2-Wire 100 Ω Platinum RTD	±0.5°C (±0.9°F)
10 kΩ or 100 kΩ Thermistor (a)	±0.1°C (±0.18°F)

a. Between 0 and 70°C (32 and 158°F).

Ambient Temperature Effect on Digital Measurement Accuracy

For a 28°C (50.4°F) change in transmitter temperature within Normal Operating Condition limits:

± 0.5% of absolute reading over the input range of 40 Ω to 10 MΩ.

Ambient Temperature Effect on Analog Output Accuracy

Digital Measurement effect plus an additional ±0.01% of span per °C.

Ambient Temperature Effect on Solution Temperature Accuracy

The effect listed below is for a 28°C (50.4°F) change in transmitter temperature within Normal Operating Condition limits.

Temperature Sensor Type	Accuracy
3-Wire 1000 Ω Platinum RTD	±0.03°C (±0.05°F)
3-Wire 100 Ω Platinum RTD	±0.1°C (±0.18°F)
2-Wire 1000 Ω Platinum RTD	±0.3°C (±0.5°F)
2-Wire 100 Ω Platinum RTD	±0.5°C (±0.9°F)
10 kΩ or 100 kΩ Thermistor (a)	±0.1°C (±0.18°F)

a. Between 0 and 70°C (32 and 158°F).

Relative Humidity Effect (5 to 95% RH)

No additional effect on performance specifications for noncondensing environments.

Supply Voltage and Load Effect

- Digital: Less than 0.005% of full scale per volt
- Analog: Less than 0.005% of analog scale per volt, in addition to digital effect.

Mounting Position Effect

Transmitter meets reference accuracy specifications for all mounting positions.

Output Noise

Included in reference accuracy specifications.

Response Time

Response time is defined as a 90% response to a stepped input change.

- Conductivity or Resistivity Measurement: Less than 3 s with no damping.
- Temperature (RTD) Measurement: Less than 5 s (without temperature prediction enabled).

Measurement Stability

Stability listed below is after six months (noncumulative):

Absolute Conductivity Measurement

Twice the absolute conductivity measurement accuracy value.

Absolute Resistivity Measurement

Twice the resistivity measurement accuracy value.

Temperature Measurement Stability

±0.05°C after six months (noncumulative).

Common Mode Rejection

120 dB, dc; or 50/60 Hz, ac; between loop and sensor (42 volts peak).

Output Span

- Minimum: 0.4% of instrument range.
- Maximum: 100% of selected display format.

NAMUR Compliance

The transmitter complies with the following NAMUR standards:

- NAMUR NE 21 for interference immunity requirements
- NAMUR NE 43 for analog overrange and underrange annunciations

Electromagnetic Compatibility (EMC)

The transmitter, when installed in accordance with MI 611-260, meets EMC directive 2014/30/EU.

EN 61326-1:2013, Electrical equipment for measurement, control and laboratory use - EMC requirements, Class A emission limits, and immunity requirements according to Table 2 for Industrial locations.

Functional Specifications

HART Supply Voltage Requirements and External Loop Load Limitations

Figure 5. HART 4 to 20 mA Output, Supply Voltage vs. Output Load

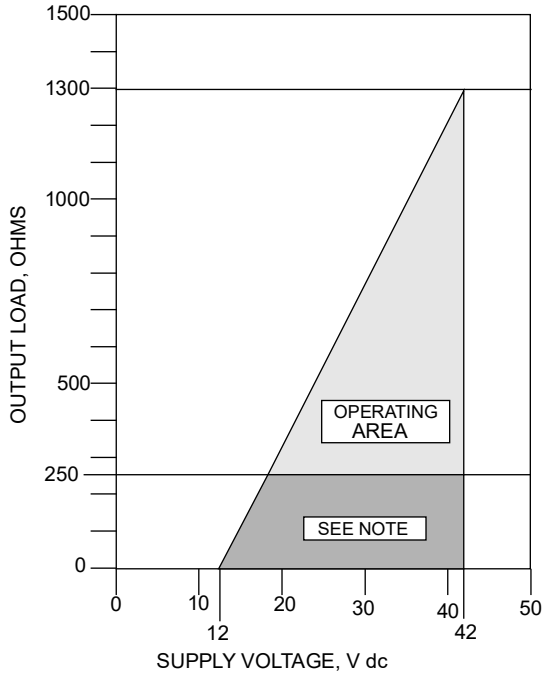

Note: The transmitter can function with an output load less than 250 ohms provided that a remote configurator or HART communicator is not connected to it. Connecting a remote configurator or HART communicator while operating outside these limits could cause output disturbances and/or communication problems.

HART Communication

Configurable for either analog (4 to 20 mA) or multidrop mode. Digital communication is provided in both modes based upon the FSK (Frequency Shift Keying) technique which alternately superimposes one of two different frequencies on the uninterrupted current carried by the two signal/power wires. The digital signal is fully scalable over the operating range of the sensor. Remote configuration is via a HART Communicator, a PC-based configurator (such as the Model PC50 or Model HHT50), or a DCS. Local configuration is via the integral Local Human Interface keypad. The HART communication rate is 1200 baud and measurement updates are 1 time/s.

Direct Connectivity to Foxboro™ DCS

The transmitter can be connected directly to a Foxboro DCS using fieldbus modules (FBMs). A HART FBM applicable to your installation can be provided.

Temperature Inputs

- Factory precalibrated sensors from -30 to +200°C (-22 to +392°F)
- 100 Ω platinum RTD; 2 or 3 wires
- 1000 Ω platinum RTD; 2 or 3 wires
- 10 kΩ thermistor (thermistor is limited from -20 to 150°C)
- 100 kΩ thermistor (thermistor is limited from -20 to 150°C)

Solution Temperature Range

-30 to +200°C (-22 to +392°F)

Units of Measurements, Cell Factors, and Display Format

Refer to Table 2 through Table 4.

Table 2. Conductivity and Concentration Display Format (a)

Cell Factor	Unit	Display Format				
		0.9999 to 9999				
0.1	µS/cm	0.9999	9.999	99.99	999.9	9999
1.0		0.9999	9.999	99.99	999.9	9999
10		0.9999	9.999	99.99	999.9	9999
0.1	µS/m	0.9999	9.999	99.99	999.9	-
1.0		-	9.999	99.99	999.9	9999
10		-	-	99.99	999.9	9999
0.1	mS/m	0.9999	9.999	99.99	999.9	-
1.0		0.9999	9.999	99.99	999.9	9999
10		0.9999	9.999	99.99	999.9	9999
0.1	mS/cm	0.9999	9.999	-	-	-
1.0		0.9999	9.999	99.99	-	-
10		0.9999	9.999	99.99	999.9	-
0.1	S/m	0.9999	-	-	-	-
1.0		0.9999	9.999	-	-	-
10		0.9999	9.999	99.99	-	-

a. In the table, '9' represents a placeholder for a digit. The actual measurement capability is determined by the cell factor and units selected.

Table 3. Scale in Percent and mS/cm Equivalent Values

Chemical	Reference Temperature	Concentration Range	Temperature Compensated Range	Base Display Scale
NaCl	25°C	0 to 28%	0 to 252 mS/cm	999.9 mS/cm
KCl	20°C	0.5 to 16%	8 to 220 mS/cm	999.9 mS/cm
CH_3COOH	25°C	0 to 15%	0 to 1.8230 mS/cm	9.999 mS/cm
H_3PO_4	25°C	0 to 36%	0 to 210 mS/cm	999.9 mS/cm

Table 4. Resistivity Display Format (a)

Unit	Cell Factor	Display Format: 0.9999 to 9999 Only				
MΩ•cm	0.1	0.9999	9.999	99.99	-	-
	1.0	0.9999	9.999	99.99	-	-
	10	-	-	-	-	-
kΩ•cm	0.1	0.9999	9.999	99.99	999.9	9999
	1.0	0.9999	9.999	99.99	999.9	-
	10	0.9999	9.999	99.99	999.9	-

a. In the table, “9” represents a placeholder for a digit. The actual measurement capability is determined by the cell factor and units selected.

Digital Outputs

1st Digital Measurement

Independently assignable to conductivity or resistivity (absolute or temperature compensated), temperature sensor resistance, solution temperature, chemical concentration, or cell resistance, if selected. Also, the primary measurement (PV) is automatically assigned as the analog output.

2nd, 3rd, and 4th Digital Measurements

Independently assignable to conductivity, resistivity, concentration, temperature sensor resistance, solution temperature, or cell resistance.

Factory Default Settings

- PV = Conductivity or Resistivity Measurement, temperature compensated
- SV = Solution Temperature
- TV = Conductivity or Resistivity Measurement, absolute
- QV = Temperature Sensor Resistance

Analog Output

- Configurable to Concentration, Conductivity, Resistivity, or Temperature
- Linear Output within Measurement Range
- Analog Output Configurable to Fail Safe
- Analog Output Hold Function

Fail Safe Output

Fail Safe output is configurable to OFF, FAIL LOW or FAIL HIGH. The factory default is OFF.

- OFF: The analog output continues to produce the available measurement without necessarily indicating a failure.
- FAIL LOW or FAIL HIGH: User-configurable to FAIL LOW (3.6 mA) or FAIL HIGH (22 mA) upon failure, consistent with NAMUR Standard NE 43.

Temperature Compensation

Temperature compensation converts the absolute conductivity measured at the actual solution temperature to the conductivity that the selected chemical would have at a fixed reference temperature. See Table 5 and Table 6 for supported compensations.

Sensor Compatibility

- 871CC Series contacting conductivity and resistivity sensors.
- 871CR Series contacting conductivity and resistivity sensors.

Precalibrated Measurement Ranges

All electronic ranges are calibrated in the factory.

Measurement Damping

Measurement damping is continuously adjustable from 1 to 300 seconds.

Output Hold

Output Hold is a feature that allows sensor maintenance such as cleaning or calibration without control system upsets. Both digital and analog outputs can be configured to output hold.

- OFF: The dynamic output tracks the live sensor readings.
- On Present: The output remains frozen at the last value when output hold was invoked.
- On Manual: Output held at a preconfigured value.

Output hold can also be configured for automatic engagement during calibration and configuration sessions.

Table 5. Supported Temperature Compensation for Conductivity Measurements

Chemical	Reference Temperature	Temperature Range	Absolute Range	Temperature Compensated Range	Concentration Range
Absolute	N/A	Instrument Range	Instrument Range	Instrument Range	N/A
NaCl	25°C	0 to 200°C	0 to 1210 mS/cm	0 to 252 mS/cm	0 to 28%
KCl	20°C	0 to 50°C	0 to 330 mS/cm	0 to 237 mS/cm	0.5 to 16%
Cation	25°C	-10 to 122°C	0 to 226 µS/cm	0 to 100 µS/cm	N/A
Linear	As Entered	Instrument Range	Instrument Range	Not Specified	N/A
H_3PO_4	25°C	4.4 to 93.3°C	0 to 300 mS/cm	0 to 210 mS/cm	0 to 36%
CH_3COOH	25°C	0 to 110°C	0 to 2.8537 mS/cm	0 to 1.8230 mS/cm	0 to 15%
Ammonia	25°C	0 to 100°C	Instrument Range	Not Specified	N/A
Morpholine	25°C	0 to 100°C	Instrument Range	Not Specified	N/A
Ions Only	25°C	0 to 100°C	0 to 1210 mS/cm	0 to 252 mS/cm	N/A
Custom	As Entered	As Entered	Instrument Range	Not Specified	As Entered

Table 6. Supported Temperature Compensation for Resistivity Measurements

Chemical	Reference Temperature	Temperature Range	Absolute Range	Temperature Compensated Range	Concentration Range
Absolute	N/A	Instrument Range	Instrument Range	Instrument Range	N/A
Cation	25°C	-10 to 122°C	> 0.004 MΩ•cm	0.01 to 18 MΩ•cm	N/A
Linear	As Entered	Instrument Range	Instrument Range	Not Specified	N/A
H_3PO_4	25°C	4.4 to 93.3°C	> 0.003 kΩ•cm	> 0.005 kΩ•cm	0 to 36%
CH_3COOH	25°C	0 to 110°C	> 0.35 kΩ•cm	> 0.55 kΩ•cm	0 to 15%
Ultra Pure H_2O	25°C	0 to 200°C	Instrument Range	0 to 18 MΩ•cm	N/A
Ammonia	25°C	0 to 100°C	Instrument Range	Not Specified	N/A
Morpholine	25°C	0 to 100°C	Instrument Range	Not Specified	N/A
Custom	As Entered	As Entered	Instrument Range	Not Specified	As Entered

Diagnostics

Continuous Diagnostics (Digital and Analog)

Complete check every eight seconds for diagnostics listed in the paragraphs that follow unless otherwise noted. When diagnostics fail, the most severe failure is displayed. Additional information can then be obtained in the diagnostics menu. All diagnostic failures are reported via the digital protocol. Many will also cause an analog Fail Safe condition. See Failsafe below.

Background Sensor Diagnostics (All Fail Safe)

- Liquid Leakage into Sensor
- Measurement Range Checks
- Temperature Sensor Range Checks (short, open, off table)

Note: Fail Safe = this diagnostic will cause the output to go to Fail Safe if Fail Safe is configured ON.

Background Electronics Self-Diagnostics (All Fail Safe)

- Checksum, EEPROM, EPROM, and RAM Image of Database
- Code Space Checksum
- Stack Checking
- Watch-Dog Timer
- Verify Readable Processor Registers
- Analog to Digital Converter

Application Diagnostics

- Compensation Range Checks (outside selected range for temperature compensation or concentration). Causes Fail Safe, if enabled.
- Analog Output Overrange and Underrange. Causes Fail Safe, if enabled.

USP645 Diagnostics

The USP645 Overrange diagnostic is for users who are processing pharmaceutical water. If the diagnostic is enabled and the absolute conductivity exceeds the maximum allowed USP value for a given temperature, the transmitter indicates this diagnostic condition.

Diagnostics Status

The following indicators are available in status mode by pressing the DOWN ARROW key:

- Solution Temperature Display
- Absolute Display
- Measurement
- Time of Last Calibration Display
- Other Device Status Displays
- Active Cell Factor
- Cell Resistance

Valid Configuration Check

Once a user configuration session is complete, the configuration is validated as a whole. If valid, you are given the choice to accept the configuration or abort and return to the previous configuration.

If any part of the configuration is invalid, the problem is indicated, and you can choose to fix the problem or abort.

Calibration

For each user calibration type, you are provided with detailed, step by step instructions on screen.

History Log

A history log of the 100 most recent events is stored in nonvolatile memory. Events include power up, diagnostic detection, pass code entry, configuration, calibration, and output hold entry and exit.

Passcode

Two configurable user passcode levels are supported.

Write Protect Jumper

A write protect jumper provides additional defense by allowing you to help prevent the local indicator (configurator) and remote configurator from writing to the electronics. Write protection fulfills the security requirements for safety systems.

Functional Block Diagrams

Refer to Figure 6 and Figure 7.

Figure 6. HART 4 to 20 mA Topology

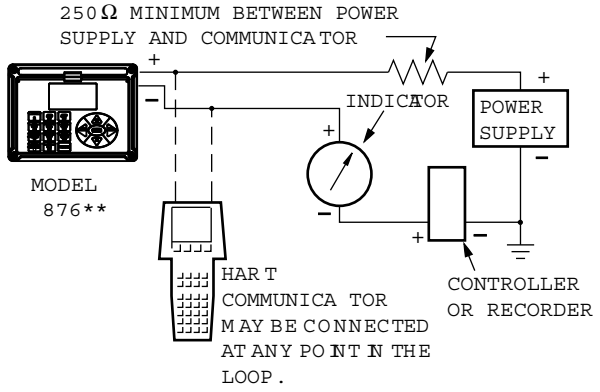

Figure 7. HART Multidrop Topology

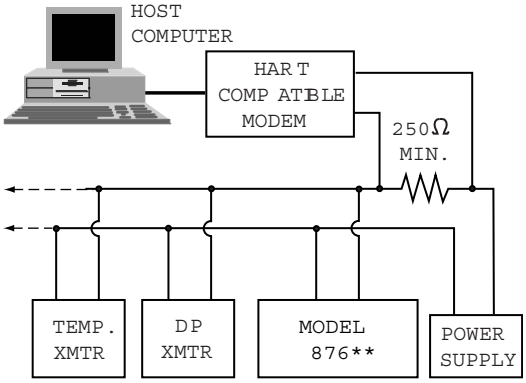

Physical Specifications

Transmitter Enclosure

The transmitter enclosure comprises a housing and hinged bezel assembly. The bezel assembly attaches to the housing with captive screws, with a gasket seal between them.

- Housing and Bezel Material
  - Aluminum alloy (with a maximum copper content of 1%).
  - Clear Lexan window on bezel assembly.
- Gasket Material
  - Silicone Rubber, Electrically Conductive

Environmental and Corrosion Resistant Protection

The enclosure has the dusttight and weatherproof rating of IP66 as defined by IEC 60529, and provides the environmental and corrosion resistant protection rating of NEMA 4X.

Storm Door (Optional)

Made from a 0.090 inch thick, clear plastic with a polished finish.

Keypad

Durable, clear thermoplastic

Display

Liquid Crystal Display (LCD)

Transmitter Mounting

The transmitter can be panel-mounted, surface-mounted, or mounted to a DN 50 or 2-in pipe. A bracket is provided for surface or pipe mounting. See “Dimensions - Nominal” on page 28 for details.

Sensor Cable Length

The length of the cable between the sensor and transmitter can be 30 m (100 ft) maximum.

Approximate Weight

- Panel Mounted Transmitter: 3.1 kg (6.8 lb)
- Surface/Pipe Mounted Transmitter:
  3.7 kg (8.1 lb.) including mounting bracket

Electrical Connections

Field wires enter through three cable entry holes at the bottom surface of the housing. Two disposable polyethylene plugs are fitted into two holes, and the third hole is fitted with a NEMA plug (for use if additional wiring is necessary). The field wires terminate at screw terminals located on a PWA (see Figure 8) located within the enclosure. These terminals are accessible by swinging down the hinged front cover. The cable entry holes are sized to accommodate standard wiring conduit or cable glands.

Figure 8. Electrical Connections

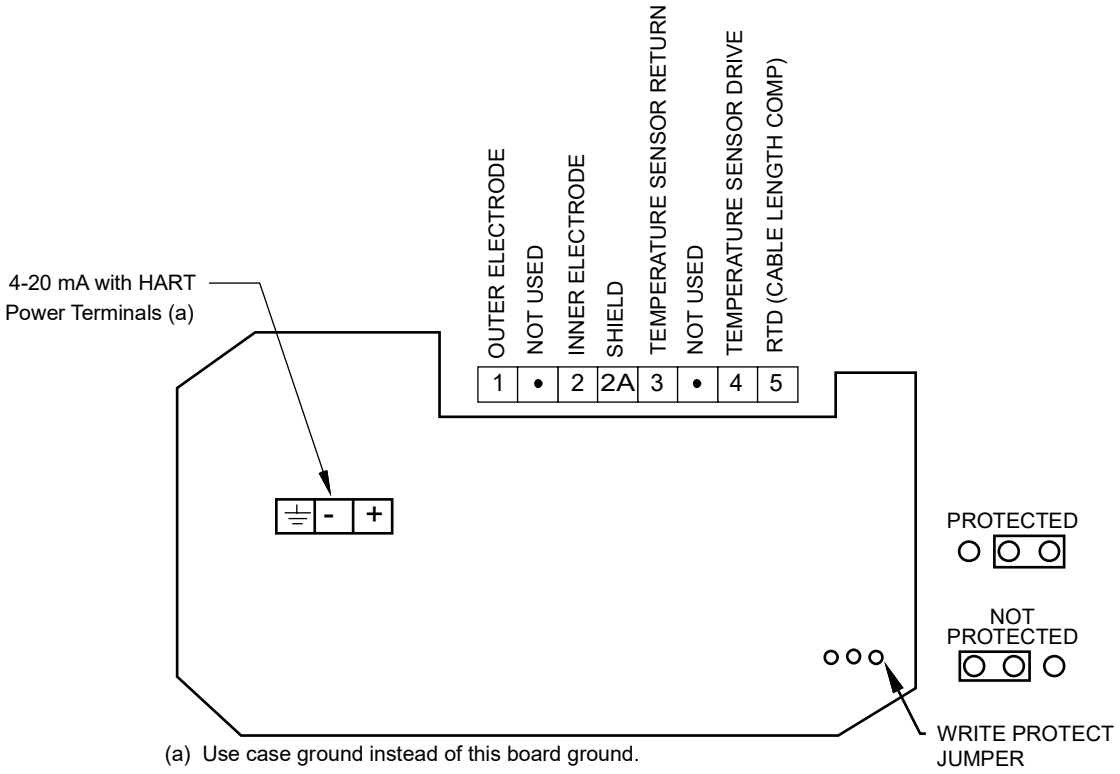

NOTE:
There must be at least 250 ohms total resistance between the PC-based configurator or HART communicator and the power supply.

Electrical Certifications

These transmitters have been designed to meet the electrical specifications listed in the table below. Contact Global Customer Support (see back page) for the status of agency approvals or certifications.

- Intrinsically Safe Entity Parameters:

  V_{max} = 30 V
  I_{max} = 110 mA
  P_{max} = 0.8 W

- Nonincendive Entity Parameters:

  V_{max} = 42 V
  I_{max} = 22 mA

- Sensor Output Entity Parameters

  Vo = 13 V dc
  Io = 40 mA
  Po = 350 mW
  Co = 0.5 µF
  Lo = 1.0 mH

Testing Laboratory, Types of Protection and Area Classification	Application Conditions	Electrical Safety Design Code
ATEX II 1 G, Ex ia IIC Ga, intrinsically safe for Zone 0.	Temperature Class T4. Ta = -20 to +60°C.	AA
ATEX II 3 G, Ex ic IIC Gc, intrinsically safe for Zone 2.	Temperature Class T4. Ta = -20 to +60°C.	AN
CSA Intrinsically Safe for Ex ia IIC T4 Ga Zone 0 **CSA** Intrinsically Safe for Class I Division 1 Groups A, B, C, D, Class II, Division 1 Groups E, F, G Class III	Temperature Class T4. Ta = -20 to +60°C.	CA
CSA Ex ic IIC T4 Gc Intrinsically safe for Zone 2 **CSA** Class I Division 2 Groups A, B, C, D	Temperature Class T4. Ta = -20 to +60°C.	CN
FM AEx ia IIC; intrinsically safe for Zone 0; **FMc** Ex ia IIC; intrinsically safe for Zone 0; and **FM** and **FMc** intrinsically safe, Class I, II, III, Division 1, Gas Groups A, B, C, D, E, F, G.	Temperature Class T4. Ta = -20 to +60°C.	FA
FM AEx nC IIC; energy limited for Zone 2; **FMc** Ex nL; energy limited for Zone 2; and **FM** and **FMc** nonincendive, Class I, II, III, Division 2, Gas Groups A, B, C, D, E, F, G.	Temperature Class T4. Ta = -20 to +60°C.	FN
IECEx Ex ia IIC Ga; intrinsically safe for Zone 0.	Temperature Class T4. Ta = -20 to +60°C.	DA
IECEx Ex ic IIC Gc; intrinsically safe for Zone 2.	Temperature Class T4. Ta = -20 to +60°C.	DN
NEPSI Ex ia IIC Ga; intrinsically safe for Zone 0.	Temperature Class T4. Ta = -20 to +60°C.	NA
NEPSI, Ex ic IIC Gc; intrinsically safe for Zone 2.	Temperature Class T4. Ta = -20 to +60°C.	NN
No Certifications	N/A	ZZ

Model Code

Model	Description
876CR	Intelligent Transmitter for Contacting Conductivity and Resistivity Measurement
Output Signal	
-T	Intelligent; Digital HART and 4 to 20 mA
Enclosure Mounting	
W	Panel Mounting
X	Surface Mounting
Y	Pipe Mounting (Horizontal or Vertical Pipe)
Electrical Certifications	
AA	ATEX intrinsically safe; II 1 G, Ex ia IIC, Zone 0
AN	ATEX intrinsically safe for II 3 G, Ex ic IIC, Zone 2
CA	CSA intrinsically safe; Class I, II, III, Division 1; and Ex ia IIC, Zone 0 Ga
CN	CSA Class I Division 2 Groups A, B, C, D T4 and Ex ic IIC T4 Gc Zone 2
FA	FM intrinsically safe; Class I, II, III, Division 1; and AEx ia IIC, Zone 0
FN	FM nonincendive; Class I, II, III, Division 2; and energy limited for AEx nC IIC, Zone 2
DA	IECEx intrinsically safe; Ex ia IIC Ga, Zone 0
DN	IECEx intrinsically safe; Ex ic IIC Gc, Zone 2
NA	NEPSI, Ex ia IIC Ga; intrinsically safe for Zone 0
NN	NEPSI Ex ic IIC Gc; intrinsically safe for Zone 2
ZZ	No Certification
Optional Selections	
-1	Special per Engineering Order (a)
-7	Storm Door (b)
Example: 876CR-TXFA-7	

a. Provides the ability to preconfigure the instrument with custom temperature compensation.
b. Used to help protect the front panel controls, particularly in field mounting applications.

Ordering Instructions

1. Model Number
2. Sensor Cell Factor (0.1, 1.0, or 10 cm^{-1})
3. Measurement Display Format (example 9.999 µS/cm)
4. Temperature Compensation Type
5. Analog Output Range
6. Temperature Compensation Input:
   - 2-wire platinum RTD; 100 Ω
   - 2-wire platinum RTD; 1000 Ω
   - 3-wire platinum RTD; 100 Ω
   - 3-wire platinum RTD; 1000 Ω
   - 10 kΩ thermistor
   - 100 kΩ thermistor
7. User Tag and Application

Dimensions - Nominal

Figure 9. Transmitter Assembly

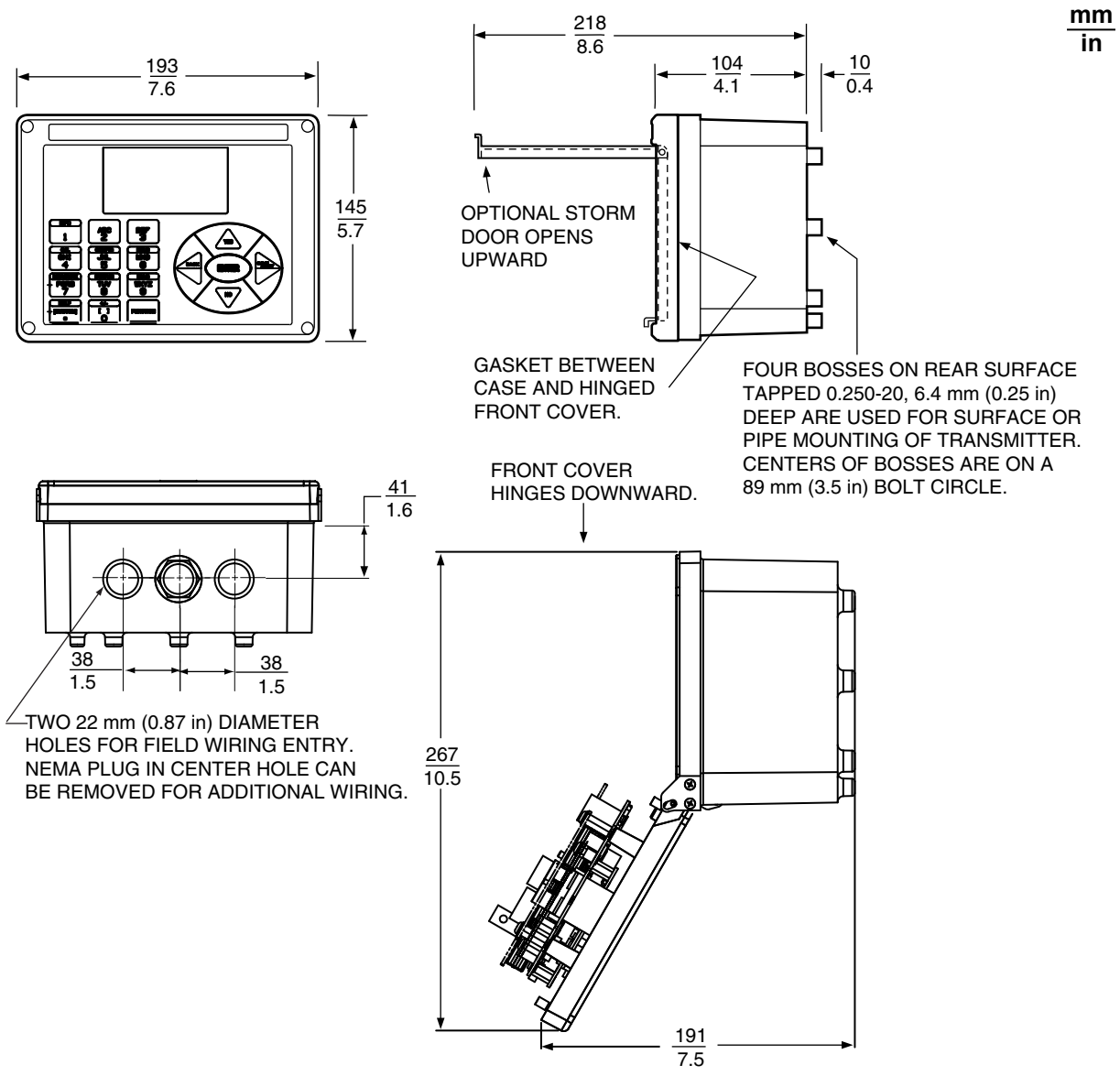

Figure 10. Transmitter Mounting

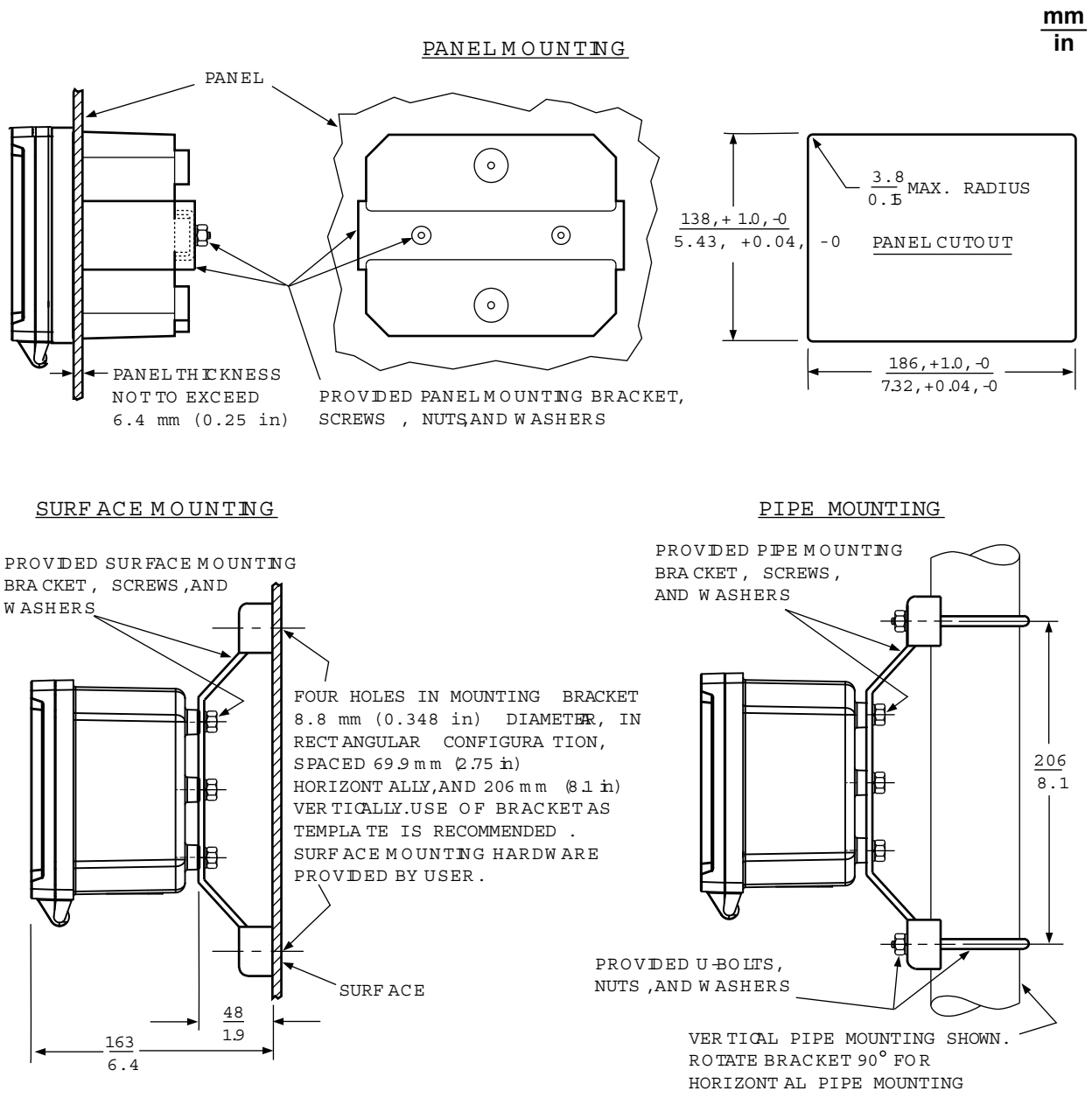

Related Documents

Document Number	Document Description
PSS 2A-1Z3 G	Model PC50 Field Device Tool for Use with Intelligent Field Devices
PSS 2A-1Z3 L	Model HHT Configurator for Use with Intelligent Field Devices
PSS 6-3C2 A	871CC Contacting Conductivity and Resistivity Sensors and Accessories
PSS 6-3C2 B	871CR Contacting Conductivity and Resistivity Sensors and Accessories
MI 611-260	876CR Contacting Conductivity and Resistivity Transmitter
MI 611-151	871CC Contacting Conductivity and Resistivity Sensors
MI 611-221	871CR Contacting Conductivity and Resistivity Sensors
MI 611-206	Intrinsic Safety Connector Diagrams - FM, CSA, and IECEx
MI 611-208	Electrochemical Products Product Safety Information - ATEX
MI 020-520	Model PC50 Intelligent Field Device Tool with Advanced DTM Library - Operation Using HART Communication Protocol

Proposition 65



WARNING: This product can expose you to chemicals including lead and lead compounds, which are known to the State of California to cause cancer and birth defects or other reproductive harm. For more information, go to https://www.P65Warnings.ca.gov.

Schneider Electric Systems USA, Inc.
70 Mechanic Street
Foxboro, MA 02035
United States of America

https://www.se.com
Global Customer Support: https://pasupport.se.com

© 2010 - 2026 Schneider Electric Systems USA, Inc. All rights reserved.

PSS 6-3A2 A, rev. F