# Analytical Products

## Model 876EC Intelligent Transmitter for Electrodeless Conductivity Measurement

## Product Specification

**PSS 6-3N3 A, Rev G**

**October 2026**




https://www.se.com

Schneider Electric

# Legal Information

The information provided in this document contains general descriptions, technical characteristics and/or recommendations related to products/solutions.

This document is not intended as a substitute for a detailed study or operational and site-specific development or schematic plan. It is not to be used for determining suitability or reliability of the products/solutions for specific user applications. It is the duty of any such user to perform or have any professional expert of its choice (integrator, specifier or the like) perform the appropriate and comprehensive risk analysis, evaluation and testing of the products/solutions with respect to the relevant specific application or use thereof.

The Schneider Electric brand and any trademarks of Schneider Electric and its subsidiaries referred to in this document are the property of Schneider Electric or its subsidiaries. All other brands may be trademarks of their respective owner.

This document and its content are protected under applicable copyright laws and provided for informative use only. No part of this document may be reproduced or transmitted in any form or by any means (electronic, mechanical, photocopying, recording, or otherwise), for any purpose, without the prior written permission of Schneider Electric.

Schneider Electric does not grant any right or license for commercial use of the document or its content, except for a non-exclusive and personal license to consult it on an “as-is” basis.

Electrical equipment should be installed, operated, serviced, and maintained only by qualified personnel. No responsibility is assumed by Schneider Electric for any consequences arising out of the use of this material.

Schneider Electric reserves the right to make changes or updates with respect to or in the content of this document or the format thereof, at any time without notice.

**To the extent permitted by applicable law, no responsibility or liability is assumed by Schneider Electric and its subsidiaries for any errors or omissions in the informational content of this document, as well as any non-intended use or misuse of the content thereof.**

# Overview

The 876EC Transmitter is a 2-wire loop powered intelligent transmitter that, when used with appropriate electrochemical sensors, provides measurement, local display, and transmission of electrodeless conductivity. The transmitter outputs a HART digital signal and a 4 to 20 mA analog output.

# Features

- 4 to 20 mA output with a HART(1) digital signal.
- Temperature prediction(2)
- Remote configuration/calibration with the HART Communicator or PC-based Configurator.
- Local configuration with the keypad on the integral local human interface.
- LCD indicator can display either one, two, or three measurement variables.
- Fault isolation to transmitter or sensor.
- Continuous transmitter/sensor diagnostics.
- Temperature compensation and concentration curves.
- Agency approved/certified as intrinsically safe device for use in hazardous area locations.
- FDT certified DTM (Device Type Manager).
- Wide measurement range.
- Two levels of passcode protection provided.
- Compatible with 871EC, 871FT, EP307B, EP307G, and FT10 Series electrodeless conductivity sensors.
- Complies with applicable NAMUR standards, and EMC directive 2014/30/EU.
- Enclosure meets IP66 and NEMA 4X ratings.
- Output Hold.

1. Usable with HART Versions 5, 6, and 7.
2. Patent pending.

## Conductivity and Concentration Measurement

This transmitter can be configured to measure in conductivity units (µS/m, µS/cm, mS/m, mS/cm, or S/m), or one of a host of chemical concentration units such as percent (%) by weight, grams per liter (g/L), parts per million (ppm), and parts per thousand (ppt). A series of preprogrammed temperature and percent chemical concentration curves are available as a standard feature. User programmable curves may also be used for special applications such as uncommon chemicals, proprietary processes, or nonbinary solutions.

## Intrinsically Safe Design

The 876EC Transmitter is designed for compliance with FM, CSA, ATEX, and IECEx standards for intrinsically safe and nonincendive apparatus in hazardous area locations. Refer to “Electrical Certifications” on page 31.

## Temperature Prediction

A proprietary mathematical algorithm is applied to accelerate the sensor’s response to changes in the process temperature. This reduces inaccuracies that may appear in the compensated measurements when the process temperature changes rapidly.

## Measurement Integration

This transmitter provides efficient integration of measurements into HART process control schemes. It operates by using a bidirectional digital signal superimposed on the 4 to 20mA analog output.

Remote communication of digital values plus status and configuration information can be achieved via HART communication protocol.

Configurations used with this HART version are:

- The HART Communicator. Users who have HART Communicators for other devices can have them upgraded with Device Descriptors (DDs) to accommodate this transmitter.
- The local human interface.
- A PC-based configurator (FDT).
- A Distributed Control System (DCS).

With HART, digital multidropping is permitted. This is the connection of several transmitters to a single communications line. Multiple transmitters can be connected on a single twisted pair of wires. See Figure 8.

## Customize and Employ up to Three Applications

This unique feature allows you to preconfigure the transmitter for up to three different applications. Each application may have its own display format, temperature compensation curve, chemical concentration curve (if applicable), and output configuration. Each application is assigned a number, for example, “Application 1”, “Application 2”, or “Application 3.” If you wish to move from one application to another, you can simply change one parameter in the configuration menu and the entire application set switches in automatically. This is a powerful feature for users who frequently change between a handful of common, or even custom, recipes.

## Auto-Switching

A useful extension to the multi application feature is an auto-switching capability between either two or three applications. User-programmable switch limits determine when the transmitter auto-switches from Application 1 to Application 2, then again from Application 2 to Application 3. Similarly, the transmitter auto-switches in descending fashion depending on the program set by the user. Because each of the applications (up to three) is individually configured, calibration constants are stored in memory and invoked as the application is retrieved.

Thus the transmitter can change from a wide range conductivity application to a very sensitive one (e.g., Rinse, Product, and CIP) without the need to recalibrate the system for the new range. This results in tremendous time savings for operators, and helps eliminate common sources of inaccuracy in critical applications.

## High Sensitivity, Wide Range

Highly accurate measurements are provided by the combination of the 876EC Transmitter and patented 871EC Sensors. Refer to Table 1, Table 2, and Table 3, for a listing of the wide variety of conductivity ranges available. The transmitter delivers a high sensitivity conductivity system for applications such as steam condensate or boiler blowdown. Measurement display formats as low as 9.999 µS/cm can be accommodated. However, the analyzer is also capable of measuring as high as 2000 mS/cm with numerous intermediate measurement display choices, resulting in better compatibility with more applications.

## Save and Restore Configurations

Configuring an electrochemical transmitter involves the setting of many parameters specific for the application. For example, measurement, sensor configuration, temperature compensation, output, chemical composition, and damping are just a few of the parameters that can be configured. In some cases, you may wish to employ the transmitter for more than one application (at different times). Rather than having to change several parameters, the Model 876EC allows you to save up to two unique configuration profiles, even when they contain multiple applications. Each profile can have up to three applications. Either of these two profiles can be restored at any time to facilitate a quick and easy change of the transmitter to a pre-saved configuration. In addition to the two user profiles, the transmitter also includes a “factory default” configuration which allows you to return the transmitter to its original factory configuration at any time.

## Quick and Informative Status

Using the status key, you can access the information necessary to assess the performance of the measurement loop. Among the parameters this “read only” key accesses are:

- Solution Temperature
- Absolute Measurement
- Compensated Measurement
- Chemical Concentration
- Measurement Status
- Date of Last Calibration

## Sensor and Transmitter Diagnostics

These functions include View Faults, Suspend Faults, Resume Faults, and View History. Typical faults include:

- Measurement Overrange and Underrange
- Compensation Overrange and Underrange
- Analog Output Overrange and Underrange
- Calibration Required
- Liquid Leakage into Sensor Body
- ATC Short and ATC Open

You can enable or disable any of the listed faults. Fault status is displayed in the main Diagnostic Menu. If there are no faults, then “No Active Faults” is displayed. You can suspend active faults from the measurement status for one hour, and can resume faults at any time.

# History Logs

The history log can be viewed and cleared by the user, and can be viewed using any of four filters: an error selection, an operational selection, a calibration selection, and an all history selection. The history log includes all faults, power restore, entries and exits from configuration, calibration, and Hold, and faults that have been temporarily suspended.

# Ease of Sensor Configuration

Schneider Electric is the world leader in electrodeless conductivity sensor technology and product breadth. It offers both insertion/submersion sensors, the 871EC Series; and revolutionary flow-through sensors, the 871FT and the FT10 Series. These sensors are offered in a multitude of sizes, materials, geometries, and mounting configurations to satisfy the majority of applications in process industries. Different sensor form factors and construction techniques result in different sensor cell factors, which affect the sensitivity and range of a particular conductivity loop.

To simplify the sensor compatibility process, the analyzer provides menu selections for each type of 871EC, 871FT, and FT10 sensor, as well as custom cell factors for optimization of special sensors. In addition, a selection of three different temperature compensator inputs (100 ohm platinum RTD, 1000 ohm platinum RTD, and 100 kohm thermistor) facilitates compatibility with standard temperature sensors, high temperature sensors, and sensors of a specialized nature. Refer to Figure 1 for FT10 non-invasive, nonmetallic flow-through sensors, and Figure 2 for 871FT flow-through sensors and 871EC Series sensors.

**Figure 1. FT10 Non-Invasive, Nonmetallic Flow-Through Sensor**

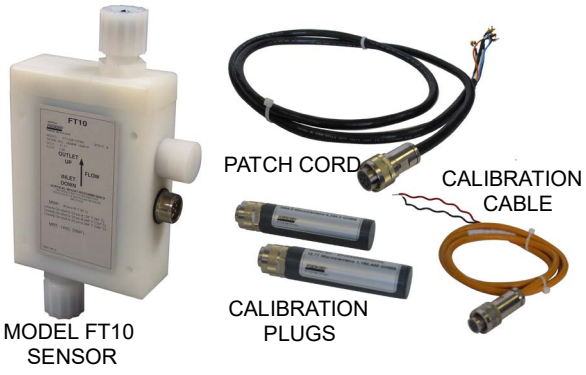

**Figure 2. 871FT Industrial and Sanitary Flow-Through Sensors and 871EC Series Sensors**




# Local Human Interface

A local human interface, as shown in Figure 3, provides local display, diagnostics, and setup. The interface consists of a 128 x 64 dot matrix LCD, a 12-key alpha-numeric keypad, 4 directional arrows, and an ENTER key. The user functions available via the local interface are also available through external interfaces.

**Figure 3. Local Human Interface**

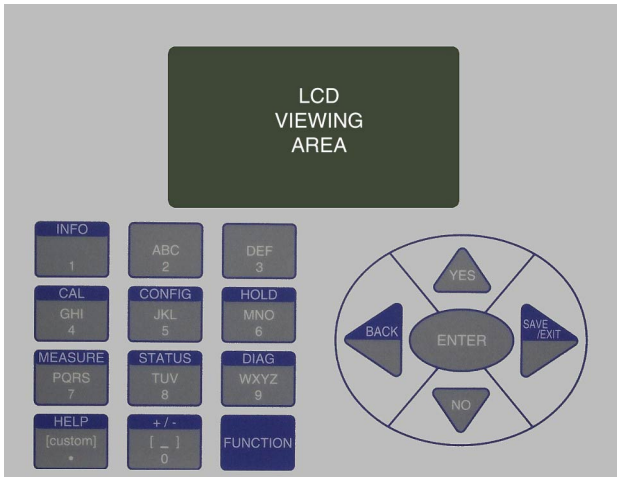


The UP and DOWN arrows are used to scroll through menu selections, which wrap from the last to the first item. HELP messages appear at the bottom of every display screen, except for measurement displays. If there is a fault, the fault symbol on the title bar will flash. And when the transmitter is in HOLD mode, this is indicated in the upper right of the display (see Figure 4 for location of displays).

A help display is accessed via the HELP function key. Help displays also appear before each calibration operation. A typical diagnostics display is shown in Figure 4, and a typical dual measurement display is shown in Figure 5.

# Display Size and Format

The LCD viewing area is 2.80 in wide x 1.53 in high, and displays Measurements, Status, Configuration settings, and Calibration settings. You may configure the interface to display a single measurement, dual measurements, or triple measurements. Font sizes include extra large, large, medium, or small (depending on what is being displayed), and are sized to allow easy reading from a distance.

**Figure 4. Typical Fault Display**

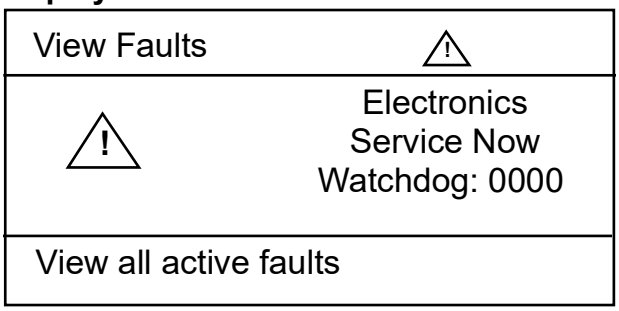


**Figure 5. Typical Dual Measurement Display**

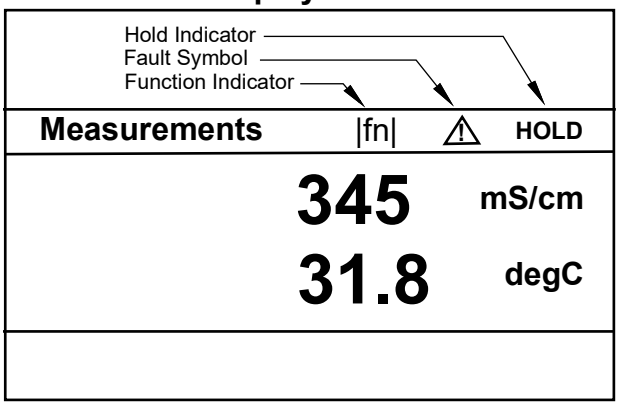


# Designed with Your Industry in Mind

Our brand has a long history in electrodeless conductivity measurement that has resulted in a comprehensive array of chemical concentration and temperature compensation transforms. These standard curves can be employed to optimize critical measurements in several common end user segments. Here are just a few examples of industry applications.

- Pulp and Paper Industry Applications
  - Dissolving tank (green liquor) and digester alkali (black liquor) temperature compensation curves
  - White liquor concentration control

- Chemical Industry Applications

  Standard concentration curves for common electrolytes, as follows:

  – Acids: sulfuric, nitric, hydrochloric, phosphoric, hydrofluoric, acetic
  – Bases: caustic, potassium hydroxide
  – Salts: sodium chloride, potassium chloride
- Power Industry Applications
  – Demineralization, regeneration, and concentration control of sodium hydroxide and sulfuric acid
  – Clean-in-place (CIP) using standard caustic and acid curves
- Food & Beverage Industry Applications
  – Sodium hydroxide concentration control for blanching
  – Brine density control for pea grading
- Metals and Mining Industry Applications
  – Steel pickling bath concentration control
- Semiconductor Industry Applications
  – Acid etching solution concentration control

In all, our models offer 17 standard chemical concentration ranges and 22 temperature compensation types. And in the event your application is not covered, we readily share data from our application files to help you develop custom curves to optimize your conductivity measurement.

## Data and Calibration Integrity

Two levels of defense help protect against unauthorized configuration/calibration changes, loss of data, and/or invalid measurement signals.

Two levels of passcode protection are provided. The first level permits access to routine maintenance functions, including calibration and output hold, as permitted by the second level of defense. The second level permits changes to configuration parameters by authorized personnel.

Data is stored in EEPROM, obviating the need for battery backup. Measurement loop integrity is enhanced by a user programmable “fail signal” parameter activated by any transmitter fault and certain serious sensor faults. This parameter forces the transmitter output to off-scale Fail High or Fail Low per NAMUR Standard NE 43.

# Durable Field-Mounted Enclosure

The 876EC is housed in an aluminum alloy enclosure, designed to withstand severe field conditions. The enclosure has dusttight and weatherproof rating of IP66 as defined by IEC 60529, and provides environmental and corrosion-resistant protection rating of NEMA 4X.

Its efficient DIN panel-size design allows easy mounting for panel, pipe, or surface applications. A hinged front door provides easy front access to field connections. Large spade lug terminals for sensor and communications connections facilitate quick maintenance and calibration procedures. The keypad overlay is constructed of polyester material.

The transmitter can also be provided with an optional clear plastic storm door to help prevent accidental activation of the front panel controls.

# Operating, Transportation, and Storage Conditions

| Influence | Reference Operating Conditions | Normal Operating Conditions | Transportation and Storage Limits |
|---|---|---|---|
| Electronic Ambient Temperature | 23 ± 2°C (73 ± 4°F) | -30 to +70°C (a) (-22 to +158°F) | -30 and +70°C (-22 and +158°F) |
| Display Ambient Temperature | 23 ± 2°C (73 ± 4°F) | -30 to +70°C (b) (c) (-22 to +158°F) | -30 and +70°C (-22 and +158°F) |
| Relative Humidity | 50 ± 10% | 5 to 90% (c) Noncondensing | 5 and 90% Noncondensing |
| Supply Voltage Over 4 to 20 mA 2-Wire Line | 24 ± 2 V dc | 12.8 to 42 V dc (see Figure 6) | Not Applicable |
| Output Load | 250 Ω | 0 to 1300 Ω (see Figure 6) | Not Applicable |
| Isolation | ±1 V dc | For Intrinsically Safe Applications: ±24 V dc<br>For General Purpose (Ordinary) Locations: ±42 V dc | Not Applicable |
| Vibration | Negligible | For Panel Mounting: 2.5 m/s$^2$ (0.25 “g”) from 5 to 200 Hz<br>For Pipe or Surface Mounting: 10 m/s$^2$ (1 “g”) from 5 to 200 Hz | Inside Shipping Container |

a. Refer to “Electrical Certifications” on page 31 for a restriction in ambient temperature with certain electrical certifications.
b. The LCD Indicator may have degraded performance between -20 and -30°C (-4 and -22°F).
c. The transmitter will operate at a low limit of 0% RH but with a possible degradation of performance.

# Performance Specifications

Transmitter specifications are under reference operating conditions unless otherwise specified. Refer to sensor literature for sensor specifications.

## Accuracy

### Accuracy of Digital Measurement (Includes Non-Linearity, Hysteresis, and Repeatability)

±1% of absolute reading within specified range for sensor (see Table 1, Table 2, and Table 3).

### Accuracy of Analog Output

Analog output accuracy is equal to the digital measurement accuracy plus an additional 0.04% of full scale (4 to 20 mA).

### Accuracy of Solution Temperature

| Sensor | Accuracy |
|---|---|
| 3-Wire 1000 Ω Platinum RTD | ±0.03°C (±0.05°F) |
| 3-Wire 100 Ω Platinum RTD | ±0.1°C (±0.18°F) |
| 2-Wire 100 Ω Platinum RTD | ±0.5°C (±0.9°F) |
| MIL SPEC 100 Ohm RTD | ±0.5°C (±0.9°F) |
| 100 kΩ Thermistor | ±0.1°C (±0.18°F) between 0 and 70°C (32 and 158°F) |

### Ambient Temperature Effect on Digital Measurement Accuracy

The effect listed below is for a 28°C (50.4°F) change in transmitter temperature within Normal Operating Condition limits.

±1% of absolute reading within specified range for sensor (see Table 1, Table 2, and Table 3).

### Ambient Temperature Effect on Analog Output Accuracy

Digital Measurement effect plus an additional ±0.01% of span per °C.

## Ambient Temperature Effect on Solution Temperature Accuracy

The effect listed below is for a 28°C (50.4°F) change in transmitter temperature within Normal Operating Condition limits, unless otherwise indicated.

| Sensor | Accuracy |
|---|---|
| 3-Wire 1000 Ω Platinum RTD | ±0.03°C (±0.05°F) |
| 3-Wire 100 Ω Platinum RTD | ±0.1°C (±0.18°F) |
| 2-Wire 100 Ω Platinum RTD | ±0.5°C (±0.9°F) |
| 100 kΩ Thermistor | ±0.1°C (±0.18°F) between 0 and 70°C (32 and 158°F) |

## Relative Humidity Effect (5 to 95% RH)

No additional effect on performance specifications for noncondensing environments.

## Supply Voltage and Load Effect

- Digital: Less than 0.005% of the reading.
- Analog: Less than 0.005% of analog scale per volt, in addition to digital effect.

## Mounting Position Effect

Transmitter meets reference accuracy specifications for recommended mounting positions.

## Output Signal Noise

Included in reference accuracy specifications.

## Response Time

Response time is defined as a 90% response to a stepped input change.

- Conductivity Measurement: Less than 5 s
- Temperature (RTD) Measurement: Less than 5 s (without temperature prediction enabled)

## Measurement Stability (Absolute Conductivity)

Stability listed is after six months (noncumulative): One additional accuracy interval allowed after six months without calibration, non cumulative.

## Solution Temperature Measurement Stability

Stability listed is after six months (noncumulative):

One additional accuracy interval allowed after six months without calibration, noncumulative.

## Common Mode Rejection

120 dB, dc; or 50/60 Hz, ac; between loop and sensor (42 volts peak)

## Output Span

- Minimum: Refer to Table 1, Table 2, and Table 3.
- Maximum: 100% of selected display format.

## NAMUR Compliance

The transmitter complies with the following NAMUR Standards:

- NAMUR NE 21 for interference immunity requirements
- NAMUR 43 for analog overrange and underrange annunciations

## Electromagnetic Compatibility (EMC)

The transmitter, when installed in accordance with MI 611-261, meets EMC directive 2014/30/EU.

EN 61326-1:2006, Electrical equipment for measurement, control and laboratory use - EMC requirements, Class A emission limits, and immunity requirements according to Table 2 for Industrial locations.

# Functional Specifications

## HART Communication

Configurable for either analog (4 to 20 mA) or multidrop mode. Digital communication is provided in both modes based upon the FSK (Frequency Shift Keying) technique which alternately superimposes one of two different frequencies on the uninterrupted current carried by the two signal/power wires. The digital signal is fully scalable over the operating range of the sensor. Remote configuration is via a HART Communicator, a PC-based configurator (such as the Model PC50 or Model HHT50), or a DCS. Local configuration is via the integral local human interface keypad. The HART communication rate is 1200 baud and measurement updates are 1 time/s.

## Direct Connectivity to Foxboro™ DCS

The transmitter can be connected directly to a Foxboro DCS using fieldbus modules (FBMs). A HART FBM applicable to your installation can be provided.

## Solution Temperature Inputs

- Factory precalibrated from -30 to +200°C (-22 to +392°F)
- 100 Ω platinum RTD; 2 or 3 wires
- 1000 Ω platinum RTD; 2 or 3 wires
- 100 k Ω thermistor (thermistor is limited from -20 to 150°C)

## Measurement Range (Selectable)

- Solution Temperature: -30 to +200°C (-22 to +392°F)
- Solution Conductivity, Temperature-Corrected: See Table 1 through Table 3.

## Table 1. 871EC and EP307 Ranges and Minimum Allowable Output Span for Selected Sensor, Units, and Display Format

| 871EC and EP307 Sensor Type | Units (a) | Selected Display Format (b) Low and High Limits of 1% Accuracy Range (c) | | | | | | | | | | Min. Allow. Output Span |
|---|---|---|---|---|---|---|---|---|---|---|---|---|
| | | 0.9999 | | 9.999 | | 99.99 | | 999.9 | | 9999 | | |
| | | Low | High | Low | High | Low | High | Low | High | Low | High | |
| AB, EV | µS/cm | | | | | | | 79.4 | 5,880.0 | 196 | 1,470,000 | 235.2 |
| | mS/m | | | | | 7.94 | 588.00 | 19.6 | 147,000.0 | 20 | 147,000 | 23.52 |
| | mS/cm | 0.0794 | 5.8800 | 0.196 | 1,470.000 | 0.20 | 1,470.00 | 0.2 | 1,470.0 | 0 | 1,470 | 0.2352 |
| | S/m | 0.0196 | 147.0000 | 0.020 | 147.000 | 0.02 | 147.00 | 0.0 | 147.0 | | | 0.02352 |
| BW, RE | µS/cm | | | | | | | 59.4 | 4,400.0 | 147 | 1,100,000 | 176 |
| | mS/m | | | | | 5.94 | 440.00 | 14.7 | 110,000.0 | 15 | 110,000 | 17.6 |
| | mS/cm | 0.0594 | 4.4000 | 0.147 | 1,100.000 | 0.15 | 1,100.00 | 0.1 | 1,100.0 | 0 | 1,100 | 0.176 |
| | S/m | 0.0147 | 110.0000 | 0.015 | 110.000 | 0.01 | 110.00 | 0.0 | 110.0 | | | 0.0176 |
| EP307, NL, PN, PX, TF | µS/cm | | | | | | | 245.0 | 8,166.7 | 817 | 6,125,000 | 980 |
| | mS/m | | | | | 24.50 | 816.67 | 81.7 | 612,500.0 | 82 | 612,500 | 98 |
| | mS/cm | 0.2450 | 8.1667 | 0.817 | 6,125.000 | 0.82 | 6,125.00 | 0.8 | 6,125.0 | 1 | 6,125 | 0.98 |
| | S/m | 0.0447 | 9.8000 | 0.082 | 612.500 | 0.08 | 612.50 | 0.1 | 612.5 | 0 | 613 | 0.098 |
| HP, PP, PT, SP | µS/cm | | | | | | | 215.0 | 7,166.7 | 717 | 5,375,000 | 860 |
| | mS/m | | | | | 21.50 | 716.67 | 71.7 | 537,500.0 | 72 | 537,500 | 86 |
| | mS/cm | 0.2150 | 7.1667 | 0.717 | 5,375.000 | 0.72 | 5,375.00 | 0.7 | 5,375.0 | 1 | 5,375 | 0.86 |
| | S/m | 0.0392 | 8.6000 | 0.072 | 537.500 | 0.07 | 537.50 | 0.1 | 537.5 | 0 | 538 | 0.086 |
| LB, UT | µS/m | | | | | | | | | 1,700 | 56,667 | 6,800 |
| | µS/cm | | | | | 17.00 | 566.67 | 56.7 | 425,000.0 | 57 | 425,000 | 68 |
| | mS/m | | | 1.700 | 56.667 | 5.67 | 42,500.00 | 5.7 | 42,500.0 | 6 | 42,500 | 6.8 |
| | mS/cm | 0.0310 | 6.8000 | 0.057 | 425.000 | 0.06 | 425.00 | 0.1 | 425.0 | 0 | 425 | 0.068 |
| | S/m | 0.0057 | 42.5000 | 0.006 | 42.500 | 0.01 | 42.50 | 0.0 | 42.5 | | | 0.0068 |

a. If Concentration or Custom units are selected, ranges correspond to selected Base Units.
b. Maximum allowable output setting is equivalent to display format.
c. Measurements are possible outside the low and high limits, but with reduced accuracy.

## Table 2. 871FT Ranges and Minimum Allowable Output Span for Selected Sensors, Units, and Display Format

| 871FT Sensor Type | Units (a) | Selected Display Format (b) Low and High Limits of 1% Accuracy Range (c) | | | | | | | | | | Min. Allow. Output Span |
|---|---|---|---|---|---|---|---|---|---|---|---|---|
| | | 0.9999 | | 9.999 | | 99.99 | | 999.9 | | 9,999 | | |
| | | Low | High | Low | High | Low | High | Low | High | Low | High | |
| 1C | µS/m | | | | | | | | | | | 232000 |
| | µS/cm | | | | | | | | | 1,348 | 58,000 | 2320 |
| | mS/m | | | | | | | 134.8 | 5,800.0 | 580 | 1,450,000 | 232 |
| | mS/cm | | | 1.348 | 58.000 | 5.80 | 14,500.00 | 5.8 | 14,500.0 | 6 | 14,500 | 2.32 |
| | S/m | 0.1348 | 5.8000 | 0.580 | 1,450.000 | 0.58 | 1,450.00 | 0.6 | 1,450.0 | 1 | 1,450 | 0.232 |
| 1D | µS/m | | | | | | | | | | | 82800 |
| | µS/cm | | | | | | | 295.7 | 6,900.0 | 2,070 | 5,175,000 | 828 |
| | mS/m | | | | | 29.57 | 690.00 | 207.0 | 517,500.0 | 207 | 517,500 | 82.8 |
| | mS/cm | 0.2957 | 6.9000 | 2.070 | 5,175.000 | 2.07 | 5,175.00 | 2.1 | 5,175.0 | 2 | 5,175 | 0.828 |
| | S/m | 0.0782 | 8.2800 | 0.207 | 517.500 | 0.21 | 517.50 | 0.2 | 517.5 | 0 | 518 | 0.0828 |
| 1E | µS/m | | | | | | | | | | | 53600 |
| | µS/cm | | | | | | | 191.4 | 4,466.7 | 1,340 | 3,350,000 | 536 |
| | mS/m | | | | | 19.14 | 446.67 | 134.0 | 335,000.0 | 134 | 335,000 | 53.6 |
| | mS/cm | 0.1914 | 4.4667 | 1.340 | 3,350.000 | 1.34 | 3,350.00 | 1.3 | 3,350.0 | 1 | 3,350 | 0.536 |
| | S/m | 0.0506 | 5.3600 | 0.134 | 335.000 | 0.13 | 335.00 | 0.1 | 335.0 | | | 0.0536 |
| 1F | µS/m | | | | | | | | | | | 22400 |
| | µS/cm | | | | | | | 130.1 | 5,600.0 | 560 | 1,400,000 | 224 |
| | mS/m | | | | | 13.01 | 560.00 | 56.0 | 140,000.0 | 56 | 140,000 | 22.4 |
| | mS/cm | 0.1301 | 5.6000 | 0.560 | 1,400.000 | 0.56 | 1,400.00 | 0.6 | 1,400.0 | 1 | 1,400 | 0.224 |
| | S/m | 0.0560 | 140.0000 | 0.056 | 140.000 | 0.06 | 140.00 | 0.1 | 140.0 | | | 0.0224 |
| 1G | µS/m | | | | | | | | | 4,429 | 103,333 | 12400 |
| | µS/cm | | | | | 44.29 | 1,033.33 | 72.0 | 3,100.0 | 310 | 775,000 | 124 |
| | mS/m | | | 4.429 | 103.333 | 7.20 | 310.00 | 31.0 | 77,500.0 | 31 | 77,500 | 12.4 |
| | mS/cm | 0.0720 | 3.1000 | 0.310 | 775.000 | 0.31 | 775.00 | 0.3 | 775.0 | 0 | 775 | 0.124 |
| | S/m | 0.0310 | 77.5000 | 0.031 | 77.500 | 0.03 | 77.50 | 0.0 | 77.5 | | | 0.0124 |
| 1H | µS/m | | | | | | | | | 2,714 | 63,333 | 7600 |
| | µS/cm | | | | | 27.14 | 633.33 | 190.0 | 475,000.0 | 190 | 475,000 | 76 |
| | mS/m | | | 2.714 | 63.333 | 19.00 | 47,500.00 | 19.0 | 47,500.0 | 19 | 47,500 | 7.6 |
| | mS/cm | 0.0718 | 7.6000 | 0.190 | 475.000 | 0.19 | 475.00 | 0.2 | 475.0 | 0 | 475 | 0.076 |
| | S/m | 0.0190 | 47.5000 | 0.019 | 47.500 | 0.02 | 47.50 | 0.0 | 47.5 | | | 0.0076 |
| 1J, 3J | µS/m | | | | | | | | | 2,143 | 50,000 | 6000 |
| | µS/cm | | | | | 21.43 | 500.00 | 150.0 | 375,000.0 | 150 | 375,000 | 60 |
| | mS/m | | | 2.143 | 50.000 | 15.00 | 37,500.00 | 15.0 | 37,500.0 | 15 | 37,500 | 6 |
| | mS/cm | 0.0567 | 6.0000 | 0.150 | 375.000 | 0.15 | 375.00 | 0.2 | 375.0 | | | 0.06 |
| | S/m | 0.0150 | 37.5000 | 0.015 | 37.500 | 0.02 | 37.50 | | | | | 0.006 |
| 2C | µS/m | | | | | | | | | | | 90800 |
| | µS/cm | | | | | | | 324.3 | 7,566.7 | 2,270 | 5,675,000 | 908 |
| | mS/m | | | | | 32.43 | 756.67 | 227.0 | 567,500.0 | 227 | 567,500 | 90.8 |
| | mS/cm | 0.3243 | 7.5667 | 2.270 | 5,675.000 | 2.27 | 5,675.00 | 2.3 | 5,675.0 | 2 | 5,675 | 0.908 |
| | S/m | 0.0858 | 9.0800 | 0.227 | 567.500 | 0.23 | 567.50 | 0.2 | 567.5 | 0 | 568 | 0.0908 |

## Table 2. 871FT Ranges and Minimum Allowable Output Span for Selected Sensors, Units, and Display Format (Continued)

| 871FT Sensor Type | Units (a) | Selected Display Format (b) Low and High Limits of 1% Accuracy Range (c) | | | | | | | | | | Min. Allow. Output Span |
|---|---|---|---|---|---|---|---|---|---|---|---|---|
| | | 0.9999 | | 9.999 | | 99.99 | | 999.9 | | 9,999 | | |
| | | Low | High | Low | High | Low | High | Low | High | Low | High | |
| 2D | µS/m | | | | | | | | | | | 32400 |
| | µS/cm | | | | | | | 188.2 | 8,100.0 | 810 | 2,025,000 | 324 |
| | mS/m | | | | | 18.82 | 810.00 | 81.0 | 202,500.0 | 81 | 202,500 | 32.4 |
| | mS/cm | 0.1882 | 8.1000 | 0.810 | 2,025.000 | 0.81 | 2,025.00 | 0.8 | 2,025.0 | 1 | 2,025 | 0.324 |
| | S/m | 0.0306 | 3.2400 | 0.081 | 202.500 | 0.08 | 202.50 | 0.1 | 202.5 | | | 0.0324 |
| 2E | µS/m | | | | | | | | | | | 20800 |
| | µS/cm | | | | | | | 120.8 | 5,200.0 | 520 | 1,300,000 | 208 |
| | mS/m | | | | | 12.08 | 520.00 | 52.0 | 130,000.0 | 52 | 130,000 | 20.8 |
| | mS/cm | 0.1208 | 5.2000 | 0.520 | 1,300.000 | 0.52 | 1,300.00 | 0.5 | 1,300.0 | 1 | 1,300 | 0.208 |
| | S/m | 0.0520 | 130.0000 | 0.052 | 130.000 | 0.05 | 130.00 | 0.1 | 130.0 | | | 0.0208 |
| 2F | µS/m | | | | | | | | | 3,143 | 73,333 | 8800 |
| | µS/cm | | | | | 31.43 | 733.33 | 220.0 | 550,000.0 | 220 | 550,000 | 88 |
| | mS/m | | | 3.143 | 73.333 | 22.00 | 55,000.00 | 22.0 | 55,000.0 | 22 | 55,000 | 8.8 |
| | mS/cm | 0.0832 | 8.8000 | 0.220 | 550.000 | 0.22 | 550.00 | 0.2 | 550.0 | 0 | 550 | 0.088 |
| | S/m | 0.0220 | 55.0000 | 0.022 | 55.000 | 0.02 | 55.00 | 0.0 | 55.0 | | | 0.0088 |
| 2G | µS/m | | | | | | | | | 1,714 | 40,000 | 4800 |
| | µS/cm | | | | | 17.14 | 400.00 | 120.0 | 300,000.0 | 120 | 300,000 | 48 |
| | mS/m | | | 1.714 | 40.000 | 12.00 | 30,000.00 | 12.0 | 30,000.0 | 12 | 30,000 | 4.8 |
| | mS/cm | 0.0454 | 4.8000 | 0.120 | 300.000 | 0.12 | 300.00 | 0.1 | 300.0 | | | 0.048 |
| | S/m | 0.0120 | 30.0000 | 0.012 | 30.000 | 0.01 | 30.00 | | | | | 0.0048 |
| 2H | µS/m | | | | | | | | | 1,627 | 70,000 | 2800 |
| | µS/cm | | | | | 16.27 | 700.00 | 70.0 | 175,000.0 | 70 | 175,000 | 28 |
| | mS/m | | | 1.627 | 70.000 | 7.00 | 17,500.00 | 7.0 | 17,500.0 | 7 | 17,500 | 2.8 |
| | mS/cm | 0.0700 | 175.0000 | 0.070 | 175.000 | 0.07 | 175.00 | 0.1 | 175.0 | | | 0.028 |
| | S/m | 0.0070 | 17.5000 | 0.007 | 17.500 | 0.01 | 17.50 | | | | | 0.0028 |
| 2J | µS/m | | | | | | | 571.4 | 13,333.3 | 929 | 40,000 | 1600 |
| | µS/cm | | | 5.714 | 133.333 | 9.29 | 400.00 | 40.0 | 100,000.0 | 40 | 100,000 | 16 |
| | mS/m | 0.5714 | 13.3333 | 0.929 | 40.000 | 4.00 | 10,000.00 | 4.0 | 10,000.0 | 4 | 10,000 | 1.6 |
| | mS/cm | 0.0400 | 100.0000 | 0.040 | 100.000 | 0.04 | 100.00 | 0.0 | 100.0 | | | 0.016 |
| | S/m | 0.0040 | 10.0000 | 0.004 | 10.000 | 0.00 | 10.00 | | | | | 0.0016 |
| 3C | µS/m | | | | | | | | | | | 120800 |
| | µS/cm | | | | | | | 431.4 | 10,066.7 | 702 | 30,200 | 1208 |
| | mS/m | | | | | 43.14 | 1,006.67 | 70.2 | 3,020.0 | 302 | 755,000 | 120.8 |
| | mS/cm | 0.4314 | 10.0667 | 0.702 | 30.200 | 3.02 | 7,550.00 | 3.0 | 7,550.0 | 3 | 7,550 | 1.208 |
| | S/m | 0.0702 | 3.0200 | 0.302 | 755.000 | 0.30 | 755.00 | 0.3 | 755.0 | 0 | 755 | 0.1208 |
| 3E | µS/m | | | | | | | | | | | 42400 |
| | µS/cm | | | | | | | 151.4 | 3,533.3 | 1,060 | 2,650,000 | 424 |
| | mS/m | | | | | 15.14 | 353.33 | 106.0 | 265,000.0 | 106 | 265,000 | 42.4 |
| | mS/cm | 0.1514 | 3.5333 | 1.060 | 2,650.000 | 1.06 | 2,650.00 | 1.1 | 2,650.0 | 1 | 2,650 | 0.424 |
| | S/m | 0.0401 | 4.2400 | 0.106 | 265.000 | 0.11 | 265.00 | 0.1 | 265.0 | | | 0.0424 |

## Table 2. 871FT Ranges and Minimum Allowable Output Span for Selected Sensors, Units, and Display Format (Continued)

| 871FT Sensor Type | Units (a) | Selected Display Format (b) Low and High Limits of 1% Accuracy Range (c) | | | | | | | | | | Min. Allow. Output Span |
|---|---|---|---|---|---|---|---|---|---|---|---|---|
| | | 0.9999 | | 9.999 | | 99.99 | | 999.9 | | 9,999 | | |
| | | Low | High | Low | High | Low | High | Low | High | Low | High | |
| 3F, 3G | µS/m | | | | | | | | | | | 19600 |
| | µS/cm | | | | | | | 113.9 | 4,900.0 | 490 | 1,225,000 | 196 |
| | mS/m | | | | | 11.39 | 490.00 | 49.0 | 122,500.0 | 49 | 122,500 | 19.6 |
| | mS/cm | 0.1139 | 4.9000 | 0.490 | 1,225.000 | 0.49 | 1,225.00 | 0.5 | 1,225.0 | 0 | 1,225 | 0.196 |
| | S/m | 0.0490 | 122.5000 | 0.049 | 122.500 | 0.05 | 122.50 | 0.0 | 122.5 | | | 0.0196 |
| 3H | µS/m | | | | | | | | | 3,571 | 83,333 | 10000 |
| | µS/cm | | | | | 35.71 | 833.33 | 250.0 | 625,000.0 | 250 | 625,000 | 100 |
| | mS/m | | | 3.571 | 83.333 | 25.00 | 62,500.00 | 25.0 | 62,500.0 | 25 | 62,500 | 10 |
| | mS/cm | 0.0945 | 10.0000 | 0.250 | 625.000 | 0.25 | 625.00 | 0.3 | 625.0 | 0 | 625 | 0.1 |
| | S/m | 0.0250 | 62.5000 | 0.025 | 62.500 | 0.03 | 62.50 | 0.0 | 62.5 | | | 0.01 |
| 4C | µS/m | | | | | | | | | | | 23600 |
| | µS/cm | | | | | | | 137.1 | 5,900.0 | 590 | 1,475,000 | 236 |
| | mS/m | | | | | 13.71 | 590.00 | 59.0 | 147,500.0 | 59 | 147,500 | 23.6 |
| | mS/cm | 0.1371 | 5.9000 | 0.590 | 1,475.000 | 0.59 | 1,475.00 | 0.6 | 1,475.0 | 1 | 1,475 | 0.236 |
| | S/m | 0.0590 | 147.5000 | 0.059 | 147.500 | 0.06 | 147.50 | 0.1 | 147.5 | | | 0.0236 |
| 4E | µS/m | | | | | | | | | 3,000 | 70,000 | 8400 |
| | µS/cm | | | | | 30.00 | 700.00 | 210.0 | 525,000.0 | 210 | 525,000 | 84 |
| | mS/m | | | 3.000 | 70.000 | 21.00 | 52,500.00 | 21.0 | 52,500.0 | 21 | 52,500 | 8.4 |
| | mS/cm | 0.0794 | 8.4000 | 0.210 | 525.000 | 0.21 | 525.00 | 0.2 | 525.0 | 0 | 525 | 0.084 |
| | S/m | 0.0210 | 52.5000 | 0.021 | 52.500 | 0.02 | 52.50 | 0.0 | 52.5 | | | 0.0084 |
| 4F, 4G | µS/m | | | | | | | | | 1,286 | 30,000 | 3600 |
| | µS/cm | | | | | 12.86 | 300.00 | 90.0 | 225,000.0 | 90 | 225,000 | 36 |
| | mS/m | | | 1.286 | 30.000 | 9.00 | 22,500.00 | 9.0 | 22,500.0 | 9 | 22,500 | 3.6 |
| | mS/cm | 0.0340 | 3.6000 | 0.090 | 225.000 | 0.09 | 225.00 | 0.1 | 225.0 | | | 0.036 |
| | S/m | 0.0090 | 22.5000 | 0.009 | 22.500 | 0.01 | 22.50 | | | | | 0.0036 |
| 4H | µS/m | | | | | | | | | 1,162 | 50,000 | 2000 |
| | µS/cm | | | | | 11.62 | 500.00 | 50.0 | 125,000.0 | 50 | 125,000 | 20 |
| | mS/m | | | 1.162 | 50.000 | 5.00 | 12,500.00 | 5.0 | 12,500.0 | 5 | 12,500 | 2 |
| | mS/cm | 0.0500 | 125.0000 | 0.050 | 125.000 | 0.05 | 125.00 | 0.1 | 125.0 | | | 0.02 |
| | S/m | 0.0050 | 12.5000 | 0.005 | 12.500 | 0.01 | 12.50 | | | | | 0.002 |
| 4J | µS/m | | | | | | | 428.6 | 10,000.0 | 697 | 30,000 | 1200 |
| | µS/cm | | | 4.286 | 100.000 | 6.97 | 300.00 | 30.0 | 75,000.0 | 30 | 75,000 | 12 |
| | mS/m | 0.4286 | 10.0000 | 0.697 | 30.000 | 3.00 | 7,500.00 | 3.0 | 7,500.0 | 3 | 7,500 | 1.2 |
| | mS/cm | 0.0300 | 75.0000 | 0.030 | 75.000 | 0.03 | 75.00 | 0.0 | 75.0 | | | 0.012 |
| | S/m | 0.0030 | 7.5000 | 0.003 | 7.500 | 0.00 | 7.50 | | | | | 0.0012 |

a. If Concentration or Custom units are selected, ranges correspond to selected Base Units.

b. Maximum allowable output setting is equivalent to display format.

c. Measurements are possible outside the low and high limits, but with reduced accuracy.

**Table 3. FT10 Ranges and Minimum Allowable Output Span for Selected Sensor, Units, and Display Format**

| FT10 Sensor Type | Units (a) | Selected Display Format (b) Low and High Limits of 1% Accuracy Range (c) | | | | | | | | | | Min. Allow. Output Span |
|---|---|---|---|---|---|---|---|---|---|---|---|---|
| | | 0.9999 | | 9.999 | | 99.99 | | 999.9 | | 9,999 | | |
| | | Low | High | Low | High | Low | High | Low | High | Low | High | |
| -08 | µS/cm | | | | | | | | | 742 | 54,900 | 2,196 |
| | mS/m | | | | | | | 74.2 | 5,490.0 | 183 | 1,372,500 | 219.6 |
| | mS/cm | | | 0.742 | 54.900 | 1.83 | 13,725.00 | 1.8 | 13,725.0 | 2 | 13,725 | 2.196 |
| | S/m | 0.0742 | 5.4900 | 0.183 | 1,372.500 | 0.18 | 1,372.50 | 0.2 | 1,372.5 | 0 | 1,373 | 0.2196 |
| -12 | µS/cm | | | | | | | 154.0 | 5,133.3 | 513 | 3,850,000 | 616 |
| | mS/m | | | | | 15.40 | 513.33 | 51.3 | 385,000.0 | 51 | 385,000 | 61.6 |
| | mS/cm | 0.1540 | 5.1333 | 0.513 | 3,850.000 | 0.51 | 3,850.00 | 0.5 | 3,850.0 | 1 | 3,850 | 0.616 |
| | S/m | 0.0281 | 6.1600 | 0.051 | 385.000 | 0.05 | 385.00 | 0.1 | 385.0 | | | 0.0616 |
| -16 | µS/cm | | | | | | | 121.0 | 4,033.3 | 403 | 3,025,000 | 484 |
| | mS/m | | | | | 12.10 | 403.33 | 40.3 | 302,500.0 | 40 | 302,500 | 48.4 |
| | mS/cm | 0.1210 | 4.0333 | 0.403 | 3,025.000 | 0.40 | 3,025.00 | 0.4 | 3,025.0 | 0 | 3,025 | 0.484 |
| | S/m | 0.0221 | 4.8400 | 0.040 | 302.500 | 0.04 | 302.50 | 0.0 | 302.5 | | | 0.0484 |

a. If Concentration or Custom units are selected, ranges correspond to selected Base Units.
b. Maximum allowable output setting is equivalent to display format.
c. Measurements are possible outside the low and high limits, but with reduced accuracy.

# Fail Safe Output

Fail Safe output is configurable to Off, Fail Low or Fail Hi. The factory default is Off.

- Off: The analog output continues to produce the available measurement without necessarily indicating a failure.
- Fail Low or Fail Hi: User-configurable to Fail Low (3.6 mA) or Fail Hi (22 mA) upon failure, consistent with NAMUR Standard NE 43.

# Analog Outputs

- Configurable to Concentration, Conductivity or Temperature
- Linear Output within Measurement Range
- Analog Output Hold Function
- Analog Output Configurable to Fail Safe

# Digital Outputs

## 1st Digital Measurement

Independently assignable to conductivity (absolute or temperature compensated), temperature sensor resistance, solution temperature, cell resistance, or chemical concentration (if selected). Also, the primary measurement (PV) is automatically assigned as the analog output.

## 2nd, 3rd, and 4th Digital Measurements

Independently assignable to conductivity, concentration, temperature sensor resistance, solution temperature, or cell resistance.

## Factory Default Settings

- PV = Conductivity Measurement, temperature compensated
- SV = Solution Temperature
- TV = Conductivity Measurement, absolute
- QV = Temperature Sensor Resistance

# Output Hold

Output Hold is a feature that allows sensor maintenance such as cleaning or calibration without control system upsets. Both digital and analog outputs are configured by output hold.

- Off: The dynamic output tracks the live sensor readings.
- On Present: The output remains frozen at the last value when output hold was invoked.
- On Manual: Output held at preconfigured values.

Output hold can also be configured for automatic engagement during calibration and configuration sessions.

# Temperature Compensation

Temperature compensation converts the absolute conductivity measured at the actual solution temperature to the conductivity that the selected chemical would have at a fixed reference temperature. See Table 4 for supported compensations.

**Table 4. Supported Compensations for Conductivity Measurements**

| Chemical | Reference Temperature | Temperature Range | Absolute Range | Temperature Compensated Range | Concentration Range |
|---|---|---|---|---|---|
| Absolute | N/A | Instrument Range | Instrument Range | Instrument Range | N/A |
| NaCl | 25°C | 0 to 200°C | 0 to 1201 mS/cm | 0 to 252 mS/cm | 0 to 28% |
| Sea Water | 25°C | 0 to 120°C | Instrument Range | Not Specified | N/A |
| KCl | 25°C (a) | 0 to 50°C | 0 to 356 mS/cm | 0 to 237 mS/cm | 0 to 16% |
| $CH_3COOH$ | 25°C | 0 to 110°C | 0 to 2.85 mS/cm | 0 to 1.83 mS/cm | 0 to 15% |
| $H_3PO_4$ | 25°C | 4.4 to 93.3°C | 0 to 300 mS/cm | 0 to 210 mS/cm | 0 to 36% |
| HCl | 25°C | -10 to +122°C | 0 to 1860 mS/cm | 0 to 825 mS/cm | 0 to 15% |
| $H_2SO_4$ | 25°C (a) | 5 to 110°C | 0 to 1440 mS/cm | 0 to 800 mS/cm | 0 to 25% |
| | 30°C | 20 to 90°C | 34 to 435 mS/cm | 43 to 150 mS/cm | 99.5 to 93% |
| | 50°C | -10 to +120°C | 24 to 613 mS/cm | 60 to 234 mS/cm | 99.5 to 93% |
| Oleum | 65°C | 32 to 120°C | 19 to 176 mS/cm | 27 to 80 mS/cm | 0 to 10% |
| | | | 10 to 176 mS/cm | 15 to 80 mS/cm | 42 to 18% |
| $HNO_3$ | 25°C | -10 to +120°C | 0 to 893 mS/cm | 0 to 525 mS/cm | 0 to 10% |
| NaOH | 25°C (a) | 0 to 120°C | 0 to 1176 mS/cm | 0 to 420 mS/cm | 0 to 15% |
| | 50°C | 0 to 100°C | 0 to 987 mS/cm | 0 to 616 mS/cm | 0 to 15% |
| | | 50 to 100°C | 0 to 1090 mS/cm | 0 to 681 mS/cm | 0 to 17% |
| | 100°C | 75 to 122°C | 0 to 1560 mS/cm | 0 to 1300 mS/cm | 0 to 22% |
| KOH | 25°C | 10 to 55°C | 0 to 750 mS/cm | 0 to 500 mS/cm | 0 to 15% |
| HF | 0°C | -10 to +208°C | 0 to 922 mS/cm | 0 to 485 mS/cm | 100 to 90% |
| | 20°C (a) | 0 to 50°C | 0 to 1350 mS/cm | 0 to 1110 mS/cm | 0 to 70% |
| Kraft Green Liquor | 85°C | 35 to 95°C | Instrument Range | Not Specified | N/A |
| Kraft Black Liquor | 160°C | 100 to 175°C | Instrument Range | Not Specified | N/A |
| Linear | As Entered | Instrument Range | Instrument Range | Not Specified | N/A |
| Custom | As Entered | As Entered | Instrument Range | Not Specified | As Entered |

a. Patented 3D Temperature Compensation

# Measurement Damping

Measurement damping is continuously adjustable from 1 to 300 seconds.

# Supply Voltage Requirements and External Loop Load Limitations

4 to 20 mA Output. See Figure 6.

**Figure 6. 4 to 20 mA Output, Supply Voltage vs. Output Load**

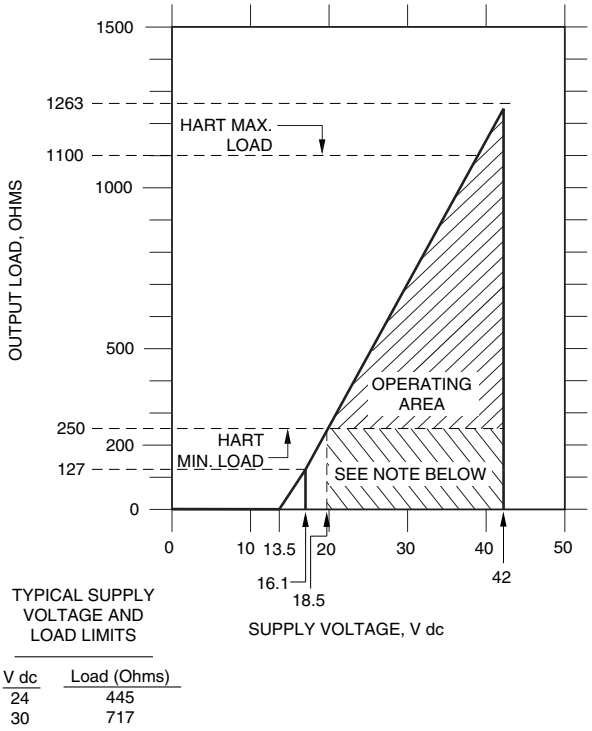


**Note 1:** The minimum and maximum loads for the HART communicator are 250 ohms and 1100 ohms respectively.

**Note 2**: The transmitter can function with an output load outside these limits provided that a remote configurator or HART communicator is not connected to it. Connecting a remote configurator or HART communicator while operating outside these limits could cause output and/or communication disturbances.

# Continuous Diagnostics (Digital and Analog)

The transmitter checks every eight seconds for diagnostics listed in the paragraphs that follow unless otherwise noted. When diagnostics fail, an indicator is displayed alternating with the main measurement. Additional information can then be obtained in the diagnostics menu. Diagnostic failures are reported via the HART digital protocol. Many will also cause an analog Fail Safe condition as noted below.

## Background Sensor Diagnostics (All Fail Safe)

- Liquid Leakage into Sensor
- Measurement Range Checks
- Temperature Sensor Range Checks (short, open, off table)

**Note:** Fail Safe = this diagnostic causes the output to go to Fail Safe if Fail Safe is configured ON.

## Background Electronics Self-Diagnostics (All Fail Safe)

- Checksum, EEPROM, EPROM, and RAM Image of Database
- Code Space Checksum (every 5 minutes)
- Stack Checking
- Watchdog Timer
- Verify Readable Processor Registers
- Analog to Digital Converter

## Application Diagnostics

- Compensation Range Checks (outside selected range for temperature compensation or concentration). Causes Fail Safe, if enabled.
- Analog Output Overrange and Underrange. Causes Fail Safe, if enabled.

# Sensor Compatibility

- 871EC Electrodeless Conductivity Sensors
- 871FT Non-Invasive Sanitary and Industrial Electrodeless Flow-Through Conductivity Sensors
- EP307B Thermoplastic Electrodeless Conductivity Sensors
- EP307G Glass Electrodeless Conductivity Sensors
- FT10 Non-Invasive, Nonmetallic Electrodeless Flow-Through Conductivity Sensors

## On-Demand Measurement Indicators

Indicators available in Status mode by pressing the DOWN ARROW key.

- Solution Temperature Display
- Absolute Input Display
- Compensated Measurement Display
- HART PV
- HART SV
- HART TV
- HART QV
- Analog Output

## Calibration

For each user calibration, you are provided with detailed, step by step instructions.

## Valid Configuration Check

Once a user configuration session is complete, the configuration is validated as a whole. If valid, you can choose to accept the configuration or abort and return to the previous configuration.

If any part of the configuration is invalid, the problem is indicated to you, and you can choose to fix it or abort.

## History Log

A history log of the 100 most recent events is stored in nonvolatile memory. Events include power up, diagnostic detection, pass code entry, configuration, calibration, output hold entry and exit, and application switches.

## Passcode

Two user passcode levels are supported.

## Externally Initiated Functions (Auto Service)

The transmitter offers the following functions which may be initiated by an external control system:

- Activate Output Hold
- Low and High Solution Calibrations
- Release Output Hold

# Write Protect Jumper

A write protect jumper provides additional defense by allowing you to help prevent the local indicator (configurator) and remote configurator from writing to the electronics. Write protection fulfills the security requirements for safety systems.

# Functional Block Diagrams

Refer to Figure 7 and Figure 8.

**Figure 7. HART 4 to 20 mA Topology**

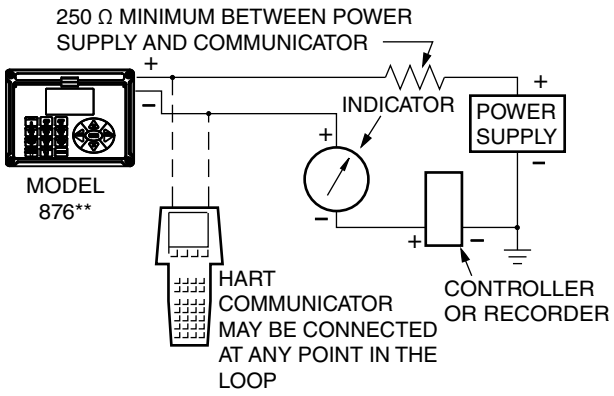


**Figure 8. HART Multidrop Topology**

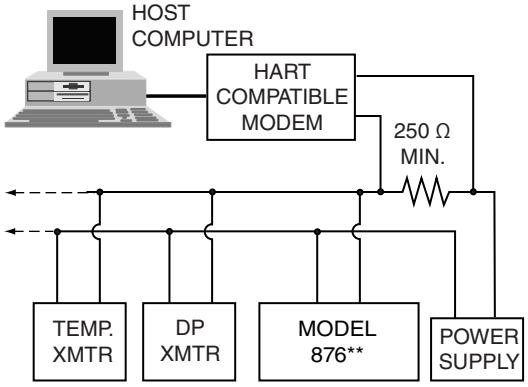

# Physical Specifications

## Transmitter Enclosure

The transmitter enclosure comprises a housing and hinged bezel assembly. The bezel assembly is sealed to the housing with captive screws, with a gasket seal between them.

- Housing and Bezel Material
  - Aluminum alloy (with a maximum copper content of 1%).
  - Clear lexan window on bezel assembly.
- Gasket Material
  - Silicone Rubber, Electrically Conductive.

## Environmental and Corrosion Resistant Protection

The enclosure has the dust tight and weatherproof rating of IP66 as defined by IEC 60529, and provides the environmental and corrosion resistant protection rating of NEMA 4X.

## Storm Door (Optional)

Made from a 0.090 inch thick, clear plastic.

## Keypad

Durable polyester.

## Display

Liquid Crystal Display (LCD).

## Transmitter Mounting

The transmitter can be panel-mounted, surface-mounted, or mounted to a DN 50 or 2-in pipe. A bracket is provided for surface or pipe mounting. Refer to “Dimensions - Nominal” on page 33 for mounting details.

## Sensor Cable Length

30 m (100 ft) maximum

## Approximate Weight

- Panel Mounted Transmitter: 3.1 kg (6.8 lb)
- Surface/Pipe Mounted Transmitter: 3.7 kg (8.1 lb); includes mounting bracket.

# Electrical Connections

Field wires enter through three cable entry holes at the lower surface of the housing, and terminate at screw terminals located on an electronics PWA located within the enclosure. These terminals are accessible by swinging down the hinged front cover.

The cable entry holes are sized to accommodate standard wiring conduit or cable glands. The electrical connections are shown in Figure 9.

**Figure 9. Electrical Connections**

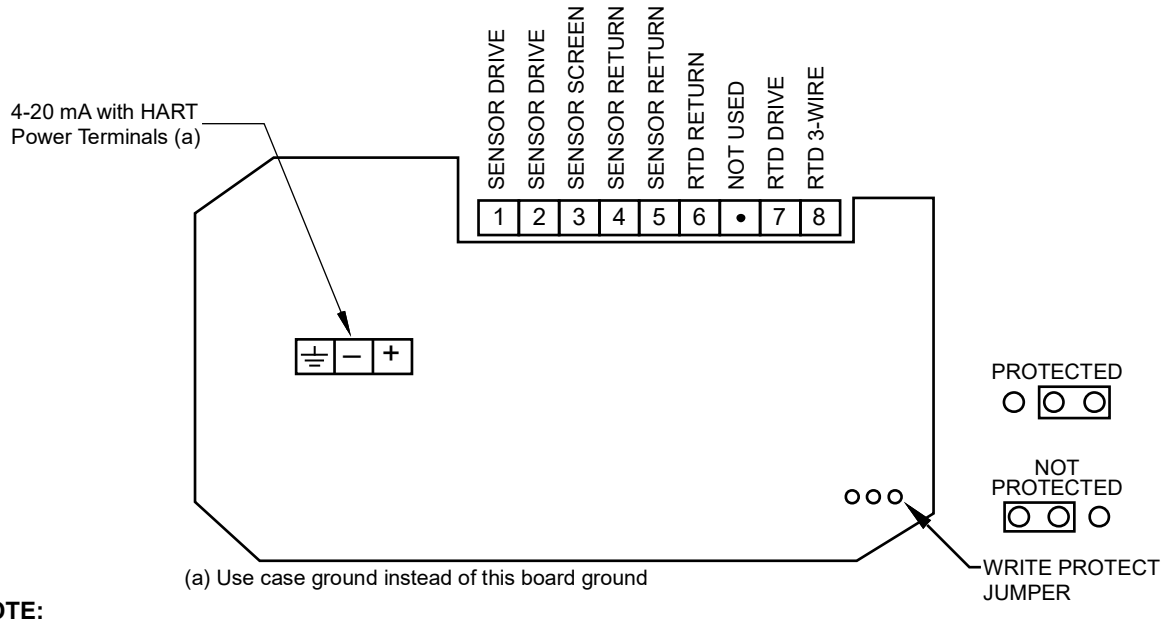


**NOTE:**
There must be at least 250 ohms total resistance between the PC-based configurator or HART communicator and the power supply.

# Electrical Certifications

Entity Parameters are as listed below:

- For Intrinsically Safe: $V_{max}$ = 30 V, $I_{max}$ = 110 mA, $P_{max}$ = 0.8 W
- For Nonincendive: $V_{max}$ = 42 V, $I_{max}$ = 22 mA
- For Sensor Output: $V_o$ = 6.5 V, $I_o$ = 110 mA, $P_o$ = 100 mW

| Testing Laboratory, Types of Protection and Area Classification | Application Conditions | Electrical Safety Design Code |
|---|---|---|
| **ATEX** II 1 G, Ex ia IIC, intrinsically safe for Zone 0. | Temperature Class T4.<br>Ta = -20 to +60°C. | AA |
| **ATEX** II 3 G, Ex ic IIC, intrinsically safe for Zone 2. | Temperature Class T4.<br>Ta = -20 to +60°C. | AN |
| **CSA** Intrinsically Safe for Ex ia IIC T4 Ga Zone 0<br>**CSA** Intrinsically Safe for Class I Division 1 Groups A, B, C, D, Class II Division 1 Groups E, F, G Class III | Temperature Class T4.<br>Ta = -20 to +60°C. | CA |
| **CSA** Ex ic IIC T4 Gc intrinsically safe for Zone 2; and<br>**CSA** Class I Division 2 Groups A, B, C, D T4 | Temperature Class T4.<br>Ta = -20 to +60°C. | CN |
| **FM** and **FMc** AEx ia IIC; intrinsically safe for Zone 0; and<br>**FM** and **FMc** intrinsically safe, Class I, II, III, Division 1, Gas Groups A, B, C, D, E, F, G. | Temperature Class T4.<br>Ta = -20 to +60°C. | FA |
| **FM** and **FMc** AEx nC IIC; nonincendive for Zone 2; and<br>**FM** and **FMc** nonincendive, Class I, II, III, Division 2, Gas Groups A, B, C, D, E, F, G. | Temperature Class T4.<br>Ta = -20 to +60°C. | FN |
| **IECEx** Ex ia IIC; intrinsically safe for Zone 0. | Temperature Class T4.<br>Ta = -20 to +60°C. | DA |
| **IECEx** Ex ic IIC; intrinsically safe for Zone 2. | Temperature Class T4.<br>Ta = -20 to +60°C. | DN |
| **NEPSI** Ex ia IIC Ga; intrinsically safe for Zone 0. | Temperature Class T4.<br>Ta = -20 to +60°C. | NA |
| **NEPSI** Ex ic IIC Gc; intrinsically safe for Zone 2. | Temperature Class T4.<br>Ta = -20 to +60°C. | NN |
| No Certifications | N/A | ZZ |

# Model Code

| Model | Description |
|---|---|
| 876EC | Electrodeless Conductivity Intelligent Transmitter |
| **Output Signal** | |
| -T | HART and 4 to 20 mA Output |
| **Enclosure Mounting** | |
| W | Panel Mounting |
| X | Surface Mounting |
| Y | Pipe Mounting (Horizontal or Vertical Pipe) |
| **Electrical Certifications** | |
| AA | ATEX II 1 G, Ex ia IIC, intrinsically safe, Zone 0 |
| AN | ATEX II 3 G, Ex ic IIC, intrinsically safe, Zone 2 |
| CA | CSA intrinsically safe; Class I, II, III, Division 1; and Ex ia IIC, Zone 0 Ga |
| CN | CSA Class I Division 2 Groups A, B, C, D T4 and Ex ic IIC T4 Gc Zone 2 |
| FA | FM, AEx ia IIC, intrinsically safe, Class I, II, and III, Division 1, Zone 0 |
| FN | FM, AEx nC IIC, nonincendive, Class I, II, and III, Division 2, Zone 2 |
| DA | IECEx, Ex ia IIC, intrinsically safe, Zone 0 |
| DN | IECEx, Ex ic IIC, intrinsically safe, Zone 2 |
| NA | NEPSI, Ex ia IIC Ga; intrinsically safe for Zone 0 |
| NN | NEPSI, Ex ic IIC Gc; intrinsically safe for Zone 2 |
| ZZ | No Certification |
| **Optional Selections** | |
| -1 | Special per Engineering Order (a) |
| -7 | Storm Door (b) |
| **Example:** 876EC-TXFA-7 | |

a. Provides the ability to preconfigure the instrument with custom temperature compensation.
b. Used to help protect front panel controls, particularly in field mounting applications.

# Ordering Instructions

1. Model Number.
2. Measuring Sensor Type; 871EC-SP, -PP, -PT, -RE, -LB, -HP, -BW, -UT, -NL, -TF, or -EV; or full Model Code of 871FT Flow-Through Sensor; or full Model Code of FT10 Sensor.
3. Measurement Display Format (example 9.999 mS/cm).
4. Temperature Compensation Type.
5. Analog Output Range.
6. Temperature Compensation Input;
   - 871EC-SP, -PT, -RE, -LB, -TF, -EV use 100 KΩ thermistor
   - 871EC-HP, -BW, -UT, PP use 100 Ω RTD, 2-wire
   - 871EC-FT or FT10 RTD Code “R” use 1000 Ω RTD, 3-wire
   - 871EC-FT, RTD Code “T” use 100 Ω RTD, 2-wire
   - FT10 Code “T” use 100 Ω RTD, 3-wire
7. User Tag and Application.

# Dimensions - Nominal

mm
in

TRANSMITTER ASSEMBLY

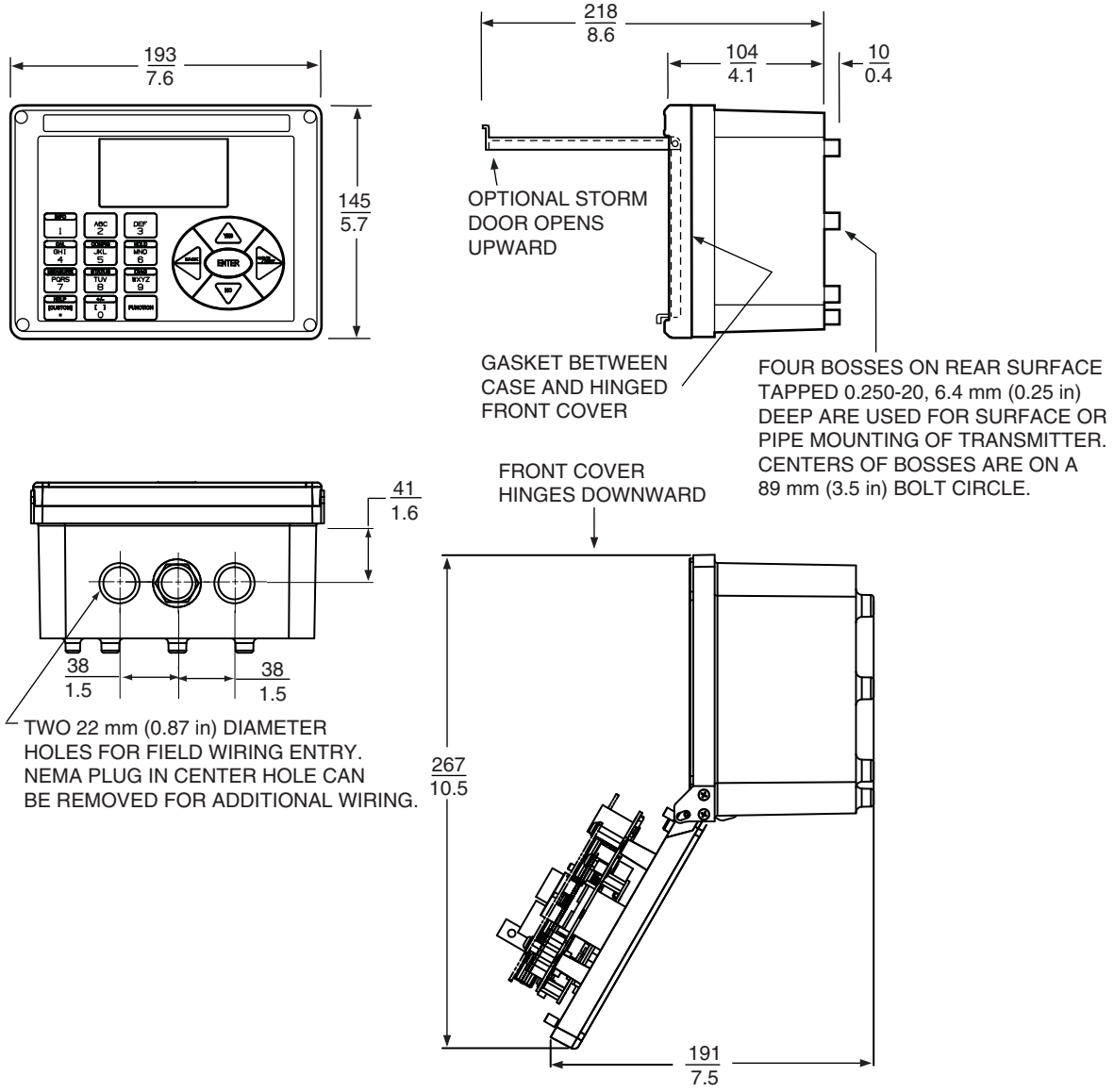

## TRANSMITTER MOUNTING

**mm**
**in**

### PANEL MOUNTING

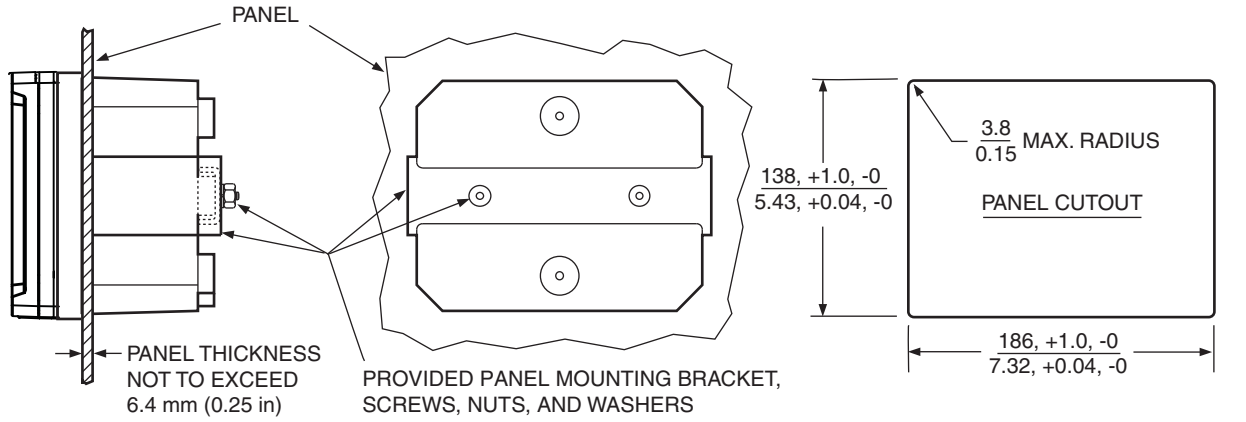


### SURFACE MOUNTING

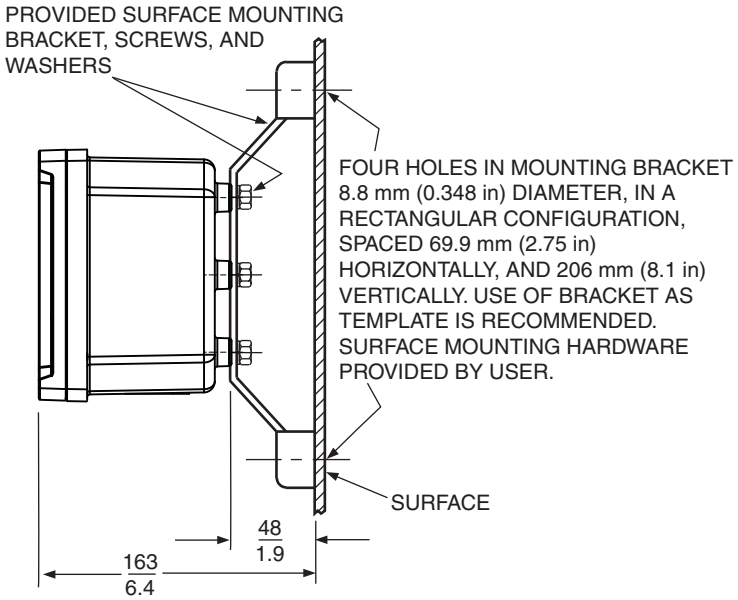


### PIPE MOUNTING

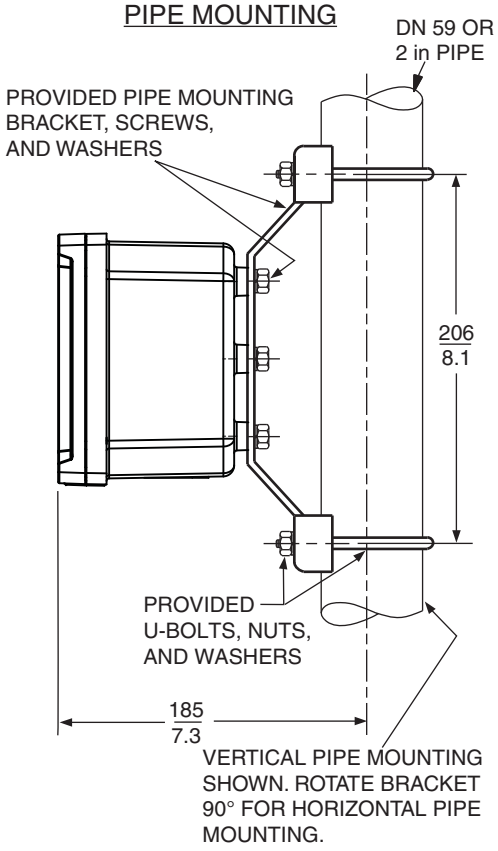

# Related Documents

| Document Number | Document Description |
|---|---|
| PSS 2A-1Z3 G | Model PC50 Field Device Tool (FDT) for Use with Intelligent Field Devices |
| PSS 2A-1Z3 L | Model HHT Configurator for Use with Intelligent Field Devices |
| PSS 6-3C4 A | 871EC Series Electrodeless Conductivity Sensors |
| PSS 6-3Q1 A | 871FT Series Non-invasive Sanitary and Industrial Electrodeless Flow-Through Conductivity Sensors |
| PSS 6-3Q1 B | FT10 Series Non-Invasive Nonmetallic Electrodeless Flow-Through Conductivity Sensors |
| Bulletin K99-5B | EP307B Series Thermoplastic Electrodeless Conductivity Sensors |
| Bulletin K99-6 | EP307G Series Glass Electrodeless Conductivity Sensors |
| MI 611-261 | 876EC Intelligent Transmitter for Electrodeless Conductivity Measurements |
| MI 611-206 | Intrinsic Safety Connector Diagrams - FM, CSA, and IECEx |
| MI 611-208 | Electrochemical Products Product Safety Information - ATEX |
| MI 611-220 | Electrodeless Conductivity System Calibration Examples |
| Bulletin K99-8 | EP485A - Calibration Plugs for Use with 871FT Sensors |
| Bulletin K99-9 | EP485N - Calibration Plugs for Use with 871FT -8/-9 Sensors |
| Bulletin K99-10 | EP485Q - Calibration Plugs for Use with 871EC and EP307 Sensors |
| Bulletin K107 | Sensor Selector Wheel |

# Proposition 65



**WARNING:** This product can expose you to chemicals including lead and lead compounds, which are known to the State of California to cause cancer and birth defects or other reproductive harm. For more information, go to https://www.P65Warnings.ca.gov.

Schneider Electric Systems USA, Inc.
70 Mechanic Street
Foxboro, MA 02035
United States of America

https://www.se.com
Global Customer Support: https://pasupport.se.com

© 2010 - 2026 Schneider Electric Systems USA, Inc. All rights reserved.

PSS 6-3N3 A, rev. G