SpaceLogic Sensors
Pressure - Dry Differential Analog
EP Series, Bluetooth® Enabled

Product Description
The SpaceLogic EP Series pressure sensor can measure either air pressure or velocity with the flip of a switch. The EP is available in three installation configurations: duct, panel or universal. Duct and panel models have two pressure and velocity options: 0-1 in. WC / 0-3,000 ft/min or 1-10 in. WC / 3,000-6,000 ft/min with four field-selectable sub-ranges. The universal model comes in one pressure/velocity range: 0-10 in. WC / 0-7,000 ft/min with seven field-selectable sub-ranges for pressure and eight for velocity. All variants are available with and without display. The EP has an IP65/NEMA 4 environmental rating and a 5-year limited warranty.

The Veris Sensors App provides the ability to connect to a device and configure a variety of field-selectable parameters remotely from a smartphone via Bluetooth wireless technology. The app allows users to create and store commonly used parameters that will reduce commissioning time and provide assurance that all parameters are properly configured with no call backs. The app can also create a trend log while connected, providing important data for troubleshooting purposes. iOS® users can download the app through the iOS App Store on their smart device. Android users can download the app through the Google Play™ store. For instructions on downloading and operating the app, see the Veris Sensors App User Guide or Veris Sensors App Quick Start Guide available on the Veris website at www.veris.com.

Available Products
For a detailed part number matrix, see the EP Series Specification Sheet.

USA: +1 888-444-1311
Europe: +46 10 478 2000
Asia: +65 6484 7877
www.schneider-electric.com

© 2026 Schneider Electric, 12345 SW Leveton Drive, Tualatin, OR 97062 USA. All rights reserved. All trademarks are owned by Schneider Electric Industries SAS or its affiliated companies. The Bluetooth word mark and logos are registered trademarks owned by Bluetooth SIG, Inc. and any use of such marks is under license.
June 2026
Z207540-0Q

Specifications

Media Compatibility	Dry or inert gas
Input Power[1]	Three-wire Volt mode: 24 Vac ±20% or 12-30 Vdc, Two-wire mA mode: 12-30 Vdc
Output Power	Field-selectable: 2-wire, loop-powered 4-20 mA Minimum input voltage for 4 to 20 mA operation: 250 Ω loop = 12 Vdc; 500 Ω loop = 19 Vdc (DC only, clipped and capped), 24 Vac/dc or 3-wire 0-5V/0-10V Minimum load resistance for Volt operation: 5 kΩ
Range 1 Selectable Subranges	Pressure mode: Unidirectional: 0.1/0.25/0.5/1 in. WC, switch selectable Bidirectional: ±0.1/±0.25/±0.5/±1 in. WC, switch selectable Unidirectional: 25/50/100/250 Pa, switch selectable Bidirectional: ±25/±50/±100/±250 Pa, switch selectable Velocity mode: 500/1,000/2,000/3,000 ft/min, 2.5/5/10/15 m/s
Range 2 Selectable Subranges	Pressure mode: Unidirectional: 1.0/2.5/5/10 in. WC, switch selectable Bidirectional: ±1.0/±2.5/±5/±10 in. WC, switch selectable Unidirectional: 250/500/1,000/2,500 Pa, switch selectable Bidirectional: ±250/±500/±1,000/±2,500 Pa, switch selectable Velocity mode: 3,000/4,000/5,000/6,000 ft/min, 15/20/25/30 m/s
Range 5 Selectable Subranges	Pressure mode: Unidirectional: 0.1/0.25/0.5/1/2.5/5/10 in. WC, switch selectable Bidirectional: ±0.1/±0.25/±0.5/±1/±2.5/±5/±10 in. WC, switch selectable Unidirectional: 25/50/100/250/500/1,000/2,500 Pa, switch selectable Bidirectional: ±25/±50/±100/±250/±500k/±1,000/±2,500 Pa, switch selectable Velocity mode: 500/1,000/2,000/3,000/4,000/5,000/6,000/7,000 ft/min, 2.5/5/10/15/20/25/30/35 m/s
Response Time	Standard: T95 in 20 sec, Fast: T95 in 2 sec, DIP switch selectable
Mode	Unidirectional or bidirectional, DIP switch selectable
Display (Option)	Pressure mode: Signed 3-1/2 digit LCD, indicates pressure, overrange indicator Velocity mode: Signed 4-1/2 digit LCD, indicates velocity, overrange indicator
Proof Pressure	1.44 psid (9,953 Pa)
Burst Pressure	4.33 psid (29,860 Pa)
Pressure Mode Accuracy[2]	±1% FS (combined linearity and hysteresis)
Velocity Mode Accuracy[3]	±90 ft/min (±0.45 m/s) plus 5% of measured value
Temperature Effect	0.00048 in. WC/°C (0.12 Pa/°C) relative to 25 °C, 0 to 50 °C (32 to 122 °F)
Zero Drift (1 year)[4]	±5.0 Pa (±0.020 in WC) max.
Zero Adjust	Pushbutton auto-zero and digital input (2-position terminal block)
Operating Environment [5]	-20 to 60 °C (-4 to 140 °F)
Altitude of Operation	0 to 3,000 m
Pollution Degree	2
Humidity Range	100% RH, non-condensing
Mounting Location	For indoor or outdoor use (display will not function below 0 °C (32 °F))
Fittings	Brass barb; 0.24" (6.1 mm) o.d.
Suggested Cable	Shielded: Belden #9939 (22 AWG) 3-wire multi-conductor (or similar) Belden #9940 (22 AWG) 4-wire multi-conductor (or similar) Belden #9939 (22 AWG) 5-wire multi-conductor (or similar) Unshielded: Belden #8443 (22 AWG) 3-wire multi-conductor (or similar) Belden #8444 (22 AWG) 4-wire multi-conductor (or similar) Belden #8445 (22 AWG) 5-wire multi-conductor (or similar)

USA: +1 888-444-1311
Europe: +46 10 478 2000
Asia: +65 6484 7877
www.schneider-electric.com

© 2026 Schneider Electric, 12345 SW Leveton Drive, Tualatin, OR 97062 USA. All rights reserved. All trademarks are owned by Schneider Electric Industries SAS or its affiliated companies. The Bluetooth word mark and logos are registered trademarks owned by Bluetooth SIG, Inc. and any use of such marks is under license.

Specifications (cont.)

Bluetooth Frequency Range	2.402 to 2.480 GHz (Bluetooth version 4.2), enabled by DIP switch
Maximum Output Power	0 dBm
Environmental Rating	IP65, NEMA 4, RoHs, REACH, RoHs (China)
Flammability Rating	UL 94 5VA fire retardant ABS, plenum rated
Limited Warranty	5 years
Agency Approvals	EN 61000-6-3 and A1 Class B, EN 61000-6-1, UL/IEC/EN 61010-1, EN 61326-1, EN 300 328 V2.2.2, EN 301 489-1 V2.1.1, FCC 15/ICES 003, UKCA (UK), RCM (Australia)

1. Class 2/II power source.
2. Example: If 1 in. WC is the selected range in bi-directional mode, the measurement span ranges from -1 in. WC to +1 in. WC = 2 in. WC.
3. For measured values between 200 and 7000 ft/min (1 and 35 m/s).
4. Can be compensated for using the Zero Reset function.
5. Display will not function below 0 °C (32 °F).

Dimensions
in. (mm)

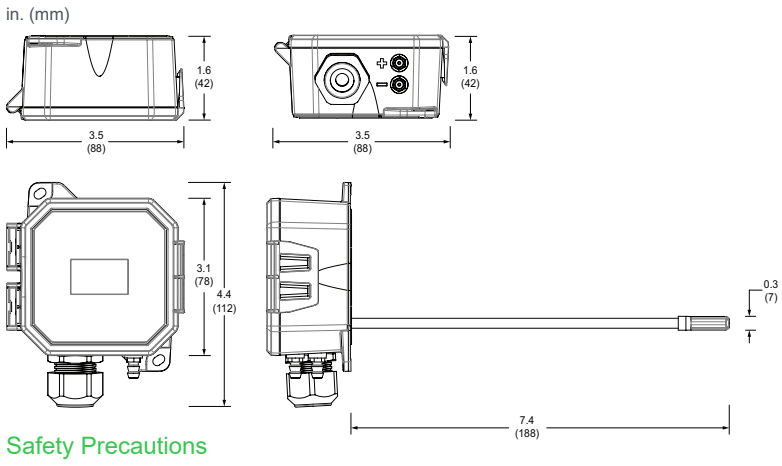

Safety Precautions

⚠ WARNING

HAZARD OF ELECTRIC SHOCK, EXPLOSION OR ARC FLASH

- Apply appropriate personal protective equipment (PPE) and follow safe electrical work practices. See NFPA 70E or CSA Z462.
- This equipment must only be installed and serviced by qualified electrical personnel.
- Turn off all power supplying this equipment before working on or inside equipment.
- Always use a properly rated voltage sensing device to confirm power is off.
- Replace all devices, doors and covers before turning on power to this equipment.

Failure to follow these instructions can result in death, serious injury or equipment damage.

This product is intended for use in HVAC and building environmental control applications.

It is not intended for direct medical monitoring of patients.

Read and understand these instructions before installing this product.

The installer is responsible for all applicable codes.

If this product is used in a manner not specified by the manufacturer, the protection provided by the product may be impaired. No responsibility is assumed by the manufacturer for any consequences arising out of the use of this material.

USA: +1 888-444-1311
Europe: +46 10 478 2000
Asia: +65 6484 7877
www.schneider-electric.com

© 2026 Schneider Electric, 12345 SW Leveton Drive, Tualatin, OR 97062 USA. All rights reserved. All trademarks are owned by Schneider Electric Industries SAS or its affiliated companies. The Bluetooth word mark and logos are registered trademarks owned by Bluetooth SIG, Inc. and any use of such marks is under license.

Installation, Wiring & Configuration

1. Plan the installation. Panel or duct mount?

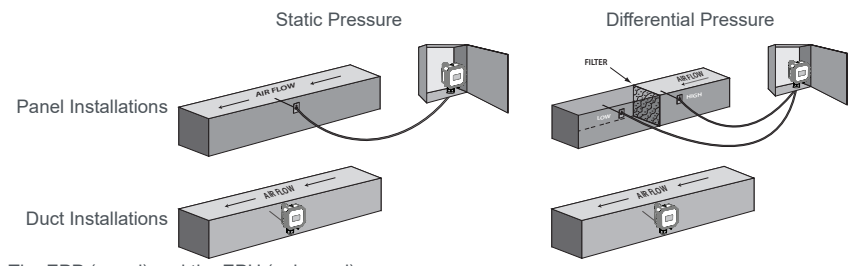

Note: The EPP (panel) and the EPU (universal) models used in velocity mode, require the use of a VFXP Series air velocity/measurement probe or AA18, AA19 or AA20 velocity pitot tubes; sold separately. Please note that the tubing accessory kit included with the EP Series is intended to be used with the included pickup probes and may not form an adequate seal with the VFXP Series. When using the VFXP Series, additional tubing, adapters or clamps should be made available by the customer and may be necessary depending upon application. The EP Series barb fittings support 5mm tubing.

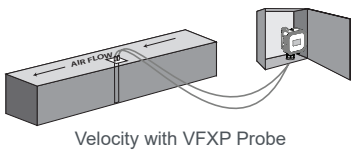

Velocity with VFXP Probe

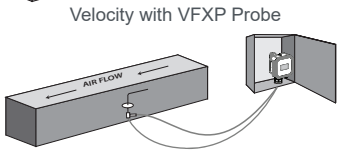

Velocity with AA18/AA19/AA20 Pitot Tube

2. For duct mount applications, thread the probe into the back of the device housing as shown in the dimensional drawing.
3. Some models (date code 2622 and later) include a protective plastic film with a colored dot on the LCD inside the housing. If this is the case, remove the protective film from the LCD. Avoid scratching the LCD after the film is removed.
4. Configure the internal tubing for the selected installation method as described below.
   Duct mount tubing configuration:
   a. Connect the right-side tube to the rear brass barb marked as "-" on the underside of the device housing.
   b. Connect the left-side tube to the probe in the back of the device housing.
   Panel mount tubing configuration:
   a. Connect the right-side tube to the rear brass barb marked as "-" on the underside of the device housing.
   b. Connect the left-side tube to the front brass barb marked as "+" on the underside of the device housing.

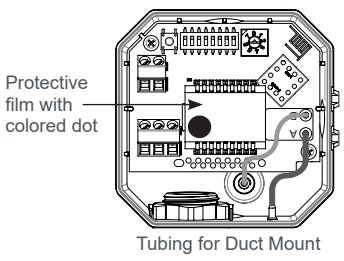

Tubing for Duct Mount

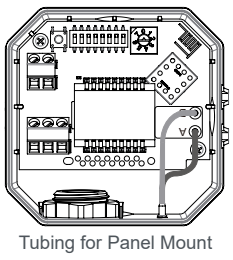

Tubing for Panel Mount

USA: +1 888-444-1311
Europe: +46 10 478 2000
Asia: +65 6484 7877
www.schneider-electric.com

© 2026 Schneider Electric, 12345 SW Leveton Drive, Tualatin, OR 97062 USA. All rights reserved. All trademarks are owned by Schneider Electric Industries SAS or its affiliated companies. The Bluetooth word mark and logos are registered trademarks owned by Bluetooth SIG, Inc. and any use of such marks is under license.

Installation, Wiring & Configuration (cont.)

5. Mount the transducer (see the screw hole diagram below).

in. (mm)

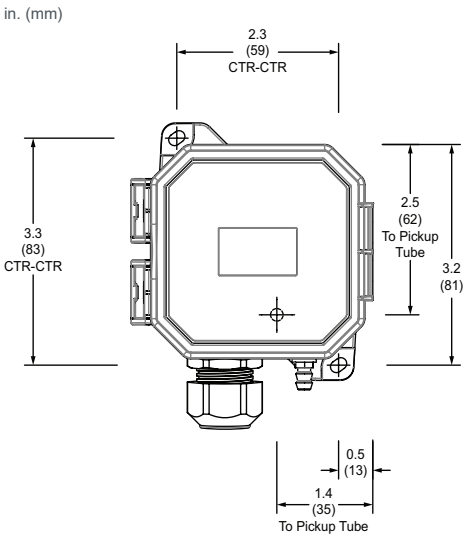

6. For applications using conduit, remove the cable gland nut on the bottom of the unit. Thread a standard 1/2-in. NPT female threaded coupler onto the body of the cable gland. Connect the opposite end of the coupler to the conduit.

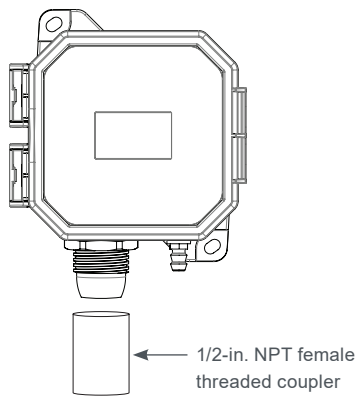

7. Set DIP switches to desired settings.*
   - DIP Switch 1: Scale
     - ON = Pascal (m/s)
     - OFF = In. WC (ft/min)
   - DIP Switch 2: Mode
     - ON = Velocity
     - OFF = Pressure
   - DIP Switch 3: Direction* *
     - ON = Unidirectional
     - OFF = Bidirectional
   - DIP Switch 4: Response
     - ON = Slow
     - OFF = Fast
   - DIP Switch 5: Output
     - ON = 4-20 mA
     - OFF = Voltage
   - DIP Switch 6: Volt Scale
     - ON = 0-5 Vdc
     - OFF = 0-10 Vdc
   - DIP Switch 7: Wireless
     - ON = Disabled
     - OFF = Enabled
   - DIP Switch 8: Unused

*DIP switches are all set to OFF by the factory.
**Velocity mode is unidirectional regardless of DIP switch setting.

DIP Switch Settings

	Scale	Mode	Direction	Response	Output	Volt Scale	Wireless	Unused
ON	Pascal / m/s	Velocity	Uni	Slow	mA	5V	Disabled	Unused
OFF	In. WC / ft/min	Pressure	Bi	Fast	Volt	10V	Enabled	Unused
	1	**2**	**3**	**4**	**5**	**6**	**7**	**8**

USA: +1 888-444-1311
Europe: +46 10 478 2000
Asia: +65 6484 7877
www.schneider-electric.com

© 2026 Schneider Electric, 12345 SW Leveton Drive, Tualatin, OR 97062 USA. All rights reserved. All trademarks are owned by Schneider Electric Industries SAS or its affiliated companies. The Bluetooth word mark and logos are registered trademarks owned by Bluetooth SIG, Inc. and any use of such marks is under license.

Installation, Wiring & Configuration (cont.)

8. Set rotary switch to desired range setting. Align the arrow (not the slot) on the rotary switch to the desired full-scale range. LCD models momentarily indicate the selected range.

Rotary Switch Settings

Range 1

Pos.	Pressure Mode
0	0 to 0.1 in. WC
1	0 to 0.25 in. WC
2	0 to 0.5 in. WC
3	0 to 1 in. WC
4	0 to 0.1 in. WC
5	0 to 0.25 in. WC
6	0 to 0.5 in. WC
7	0 to 1 in. WC

Pos.	Velocity Mode
0	0 to 500 ft/min
1	0 to 1,000 ft/min
2	0 to 2,000 ft/min
3	0 to 3,000 ft/min
4	0 to 500 ft/min
5	0 to 1,000 ft/min
6	0 to 2,000 ft/min
7	0 to 3,000 ft/min

Pos.	Pressure Mode
0	0 to 25 Pa
1	0 to 50 Pa
2	0 to 100 Pa
3	0 to 250 Pa
4	0 to 25 Pa
5	0 to 50 Pa
6	0 to 100 Pa
7	0 to 250 Pa

Pos.	Velocity Mode
0	0 to 2.5 m/s
1	0 to 5 m/s
2	0 to 10 m/s
3	0 to 15 m/s
4	0 to 2.5 m/s
5	0 to 5 m/s
6	0 to 10 m/s
7	0 to 15 m/s

Range 2

Pos.	Pressure Mode
0	0 to 1 in. WC
1	0 to 2.5 in. WC
2	0 to 5 in. WC
3	0 to 10 in. WC
4	0 to 1 in. WC
5	0 to 2.5 in. WC
6	0 to 5 in. WC
7	0 to 10 in. WC

Pos.	Velocity Mode
0	0 to 3,000 ft/min
1	0 to 4,000 ft/min
2	0 to 5,000 ft/min
3	0 to 6,000 ft/min
4	0 to 3,000 ft/min
5	0 to 4,000 ft/min
6	0 to 5,000 ft/min
7	0 to 6,000 ft/min

Range 2 (cont.)

Pos.	Pressure Mode
0	0 to 250 Pa
1	0 to 500 Pa
2	0 to 1,000 Pa
3	0 to 2,500 Pa
4	0 to 250 Pa
5	0 to 500 Pa
6	0 to 1,000 Pa
7	0 to 2,500 Pa

Pos.	Velocity Mode
0	0 to 15 m/s
1	0 to 20 m/s
2	0 to 25 m/s
3	0 to 30 m/s
4	0 to 15 m/s
5	0 to 20 m/s
6	0 to 25 m/s
7	0 to 30 m/s

Range 5

Pos.	Pressure Mode
0	0 to 0.1 in. WC
1	0 to 0.25 in. WC
2	0 to 0.5 in. WC
3	0 to 1 in. WC
4	0 to 2.5 in. WC
5	0 to 5 in. WC
6	0 to 10 in. WC
7	0 to 10 in. WC

Pos.	Velocity Mode
0	0 to 500 ft/min
1	0 to 1,000 ft/min
2	0 to 2,000 ft/min
3	0 to 3,000 ft/min
4	0 to 4,000 ft/min
5	0 to 5,000 ft/min
6	0 to 6,000 ft/min
7	0 to 7,000 ft/min

Pos.	Pressure Mode
0	0 to 25 Pa
1	0 to 50 Pa
2	0 to 100 Pa
3	0 to 250 Pa
4	0 to 500 Pa
5	0 to 1,000 Pa
6	0 to 2,500 Pa
7	0 to 2,500 Pa

Pos.	Velocity Mode
0	0 to 2.5 m/s
1	0 to 5 m/s
2	0 to 10 m/s
3	0 to 15 m/s
4	0 to 20 m/s
5	0 to 25 m/s
6	0 to 30 m/s
7	0 to 35 m/s

USA: +1 888-444-1311
Europe: +46 10 478 2000
Asia: +65 6484 7877
www.schneider-electric.com

© 2026 Schneider Electric, 12345 SW Leveton Drive, Tualatin, OR 97062 USA. All rights reserved. All trademarks are owned by Schneider Electric Industries SAS or its affiliated companies. The Bluetooth word mark and logos are registered trademarks owned by Bluetooth SIG, Inc. and any use of such marks is under license.

Installation, Wiring & Configuration (cont.)

9. Connect the transmitter to the control system and power supply as indicated below. Optional: Connect the ZERO terminals to the digital output (contact closure) of the control system.

2-wire, 4-20 mA Current Loop Output

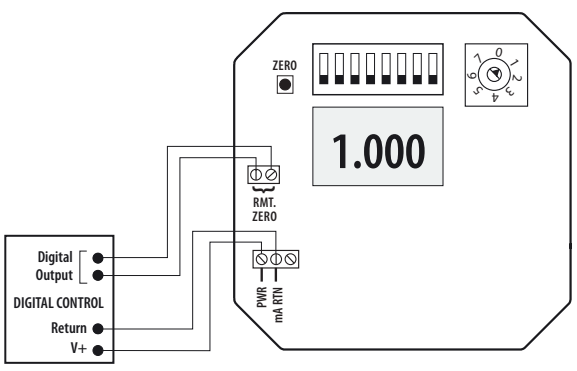

3-wire, 0-5 V/0-10 V Voltage Output

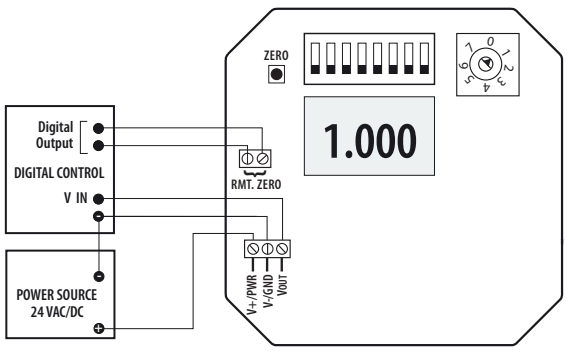

10. Wait five seconds, then press and hold the ZERO pushbutton for two seconds or provide contact closure on the AUX ZERO terminal. This will reset the output and display to zero pressure. For best accuracy, press the ZERO button while both ports are open to atmospheric pressure. To protect the unit from accidental zero, this feature is enabled only when the detected pressure is within about 0.5 in. WC (125 Pa) of factory calibration.

11. Connect desired external tubing to the device.

USA: +1 888-444-1311
Europe: +46 10 478 2000
Asia: +65 6484 7877
www.schneider-electric.com

© 2026 Schneider Electric, 12345 SW Leveton Drive, Tualatin, OR 97062 USA. All rights reserved. All trademarks are owned by Schneider Electric Industries SAS or its affiliated companies. The Bluetooth word mark and logos are registered trademarks owned by Bluetooth SIG, Inc. and any use of such marks is under license.

Operation

EP Series devices employ high performance sensors and sophisticated temperature compensation circuitry. The sensor achieves its best accuracy after an initial warm-up period. During the first few minutes of operation, readings at zero pressure and the lowest pressure ranges may appear erroneous. Following this initial warm-up period, the EP device maintains its specified accuracy and stability.

LCD Display: The display momentarily indicates range 'SET' when a selection is made. Pressure is normally indicated on the display. Units are in inches water column (in. WC), Pascals (Pa) or kilopascals (kPa) as indicated on the display. The display shows 'OVR' when the pressure is over range.

China RoHS Compliance Information

部件名称	有害物质 - Hazardous Substances					
Part Name	铅 (Pb)	汞 (Hg)	镉 (Cd)	六价铬 (Cr (VI))	多溴联苯 (PBB)	多溴二苯醚 (PBDE)
电子件 Electronic	X	O	O	O	O	O

本表格依据SJ/T11364的规定编制。
O: 表示该有害物质在该部件所有均质材料中的含量均在GB/T 26572规定的限量要求以下。
X: 表示该有害物质至少在该部件的某一均质材料中的含量超出GB/T 26572规定的限量要求。
（企业可在此处，根据实际情况对上表中打 "X" 的技术原因进行进一步说明。）

This table is made according to SJ/T 11364.
O: indicates that the concentration of hazardous substance in all of the homogeneous materials for this part is below the limit as stipulated in GB/T 26572.
X: indicates that concentration of hazardous substance in at least one of the homogeneous materials used for this part is above the limit as stipulated in GB/T 26572

Z000057-0B

This device complies with part 15 of the FCC Rules. Operation is subject to the following two conditions: (1) This device may not cause harmful interference, and (2) this device must accept any interference received, including interference that may cause undesired operation.

Changes or modifications not expressly approved by the party responsible for compliance could void the user's authority to operate the equipment.

This device complies with Industry Canada license-exempt RSS standard(s). Operation is subject to the following two conditions: (1) this device may not cause interference, and (2) this device must accept any interference, including interference that may cause undesired operation of the device.

Cet appareil est conforme aux normes d'exemption de licence RSS d'Industry Canada. Son fonctionnement est soumis aux deux conditions suivantes : (1) cet appareil ne doit pas causer d'interférence et (2) cet appareil doit accepter toute interférence, notamment les interférences qui peuvent affecter son fonctionnement.

This equipment complies with ISED RSS-102 radiation exposure limits set forth for an uncontrolled environment. This equipment should be installed and operated with minimum distance 20 cm (7.9 inches) between the radiator and any part of your body. This transmitter must not be co-located or operating in conjunction with any other antenna or transmitter.

Cet équipement est conforme aux limites d'exposition aux radiations ISED CNR-102 établies pour un environnement non contrôlé. Une distance de séparation d'au moins 20 cm doivent être maintenue entre l'antenne de cet appareil et toutes les personnes. Lanceurs ou ne peuvent pas coexister cette antenne ou capteurs avec d'autres.

USA: +1 888-444-1311
Europe: +46 10 478 2000
Asia: +65 6484 7877
www.schneider-electric.com

© 2026 Schneider Electric, 12345 SW Leveton Drive, Tualatin, OR 97062 USA. All rights reserved. All trademarks are owned by Schneider Electric Industries SAS or its affiliated companies. The Bluetooth word mark and logos are registered trademarks owned by Bluetooth SIG, Inc. and any use of such marks is under license.