A9RCD3263Z7

en zh

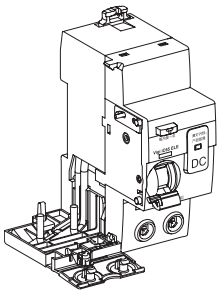

JPS85834-00

en Vigi iC65 ELE DC　　zh Vigi iC65 ELE DC

This product complies with:
- Q/SECI 1001-2025: Residual current operated protective devices for D.C. system.
- GB/Z 40680-2021: General requirements for residual current operated protective devices for D.C. system (IEC TS 63053:2017, IDT).

本产品执行标准:
- Q/SECI 1001-2025: 直流系统用剩余电流动作保护电器 。
- GB/Z 40680-2021: 直流系统用剩余电流动作保护电器的一般要求（等同采用 IEC TS 63053:2017)。

en	Electrical hazard	Installation by qualified electricians only
zh	电击危险	只有具备相应资质的电气人员才能安装和维修该设备。

JPS85834

PLEASE NOTE
- The installation, maintenance and eventual replacement of this device must only be carried out by a qualified electrician.
- This device must not be repaired.
- All applicable local, regional and national regulations must be complied with during the installation, use, maintenance and replacement of this device.
- This device should not be installed if, when unpacking it, you observe that it is damaged.
- Schneider Electric cannot be held responsible in the event of non-compliance with the instructions in this document and in the documents to which it refers.
- The service instruction must be observed throughout the life time of this device.
- Compliance with standards is ensured when this RCD is combined with suitable MCB of the same familly listed in the Schneider Electric catalogue.
- This device is suitable for DC power distribution systems with a rated voltage not exceeding 400 V.
- Regularly press the test button on RCD device. If it fails to trip, contact a qualified electrician immediately.

请注意
- 本设备的安装，维护以及更换仅限具备资质的专业人员进行。
- 禁止对本设备进行维修。
- 安装、使用、维护和更换设备时，必须遵守所有适用的当地、地区和国家法规。
- 拆箱时若发现设备损坏，请勿安装。
- 对未遵守本说明及其相关文件而引起的任何后果，施耐德电气概不承担任何责任。
- 本说明适用于产品的整个生命周期。
- 本剩余电流动作保护器 RCD 需与施耐德电气产品目录中指定系列的微型断路器 MCB 配合使用，以确保符合标准。
- 本产品适用于额定电压不超过 400 V 的直流配电系统。
- 必须定期按压 RCD 上的测试按钮。若设备未跳闸，应立即联系持证电工检修。

⚠⚠ DANGER / 危险

HAZARD OF ELECTRIC SHOCK, EXPLOSION, OR ARC FLASH
- Turn off all power supplying this device before working on it.
- Use a voltage tester with a suitable rated voltage, in order to check that all active conductors aren't energized.

Failure to follow these instructions will result in death or serious injury.

可能有触电、爆炸或者电弧灼伤的危险
- 维护设备前，务必切断所有电源。
- 使用具有合适额定电压的验电器确认所有导体不带电。

不遵循上述说明将导致人员伤亡。

1 Description / 描述

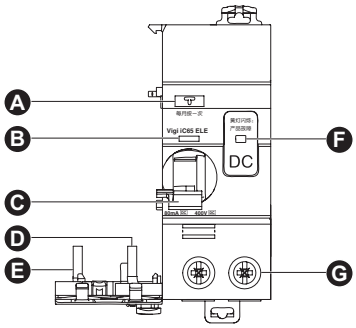

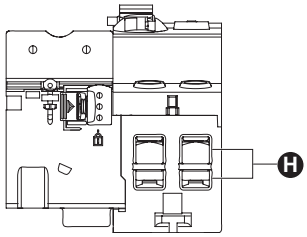

	en	zh
A	Test button	测试按钮
B	VISI-TRIP Window	可视跳闸指示窗口
C	Handle	手柄
D	Right terminal, connect to the right screw of RCD	右接线柱（对应 RCD 右侧螺钉）
E	Left terminal, connect to the left screw of RCD	左接线柱（对应 RCD 左侧螺钉）
F	LED indicator	产品状态指示窗口
G	Double-terminal wiring screw	双端子接线螺钉
H	Double-terminal wiring hole	双端子接线孔

2 Derating Factor for Residual-Current Add-On Block Assembly / 漏电附件拼装降容系数

Poles of assembled MCB / 配合的 MCB 极数	≤20A	25A	32A	40A	50A	63A
2P	1	0.96	0.93	0.97	0.93	0.91

3 Compatible MCB Models for Assembly / 可拼装的 MCB 如下

	iC65H DC MCB ≤63A	iC65L DC MCB ≤63A
2P	✓	✓

4 Installation / 安装

4.1 RCD Installation With MCB / RCD 与 MCB 的拼装

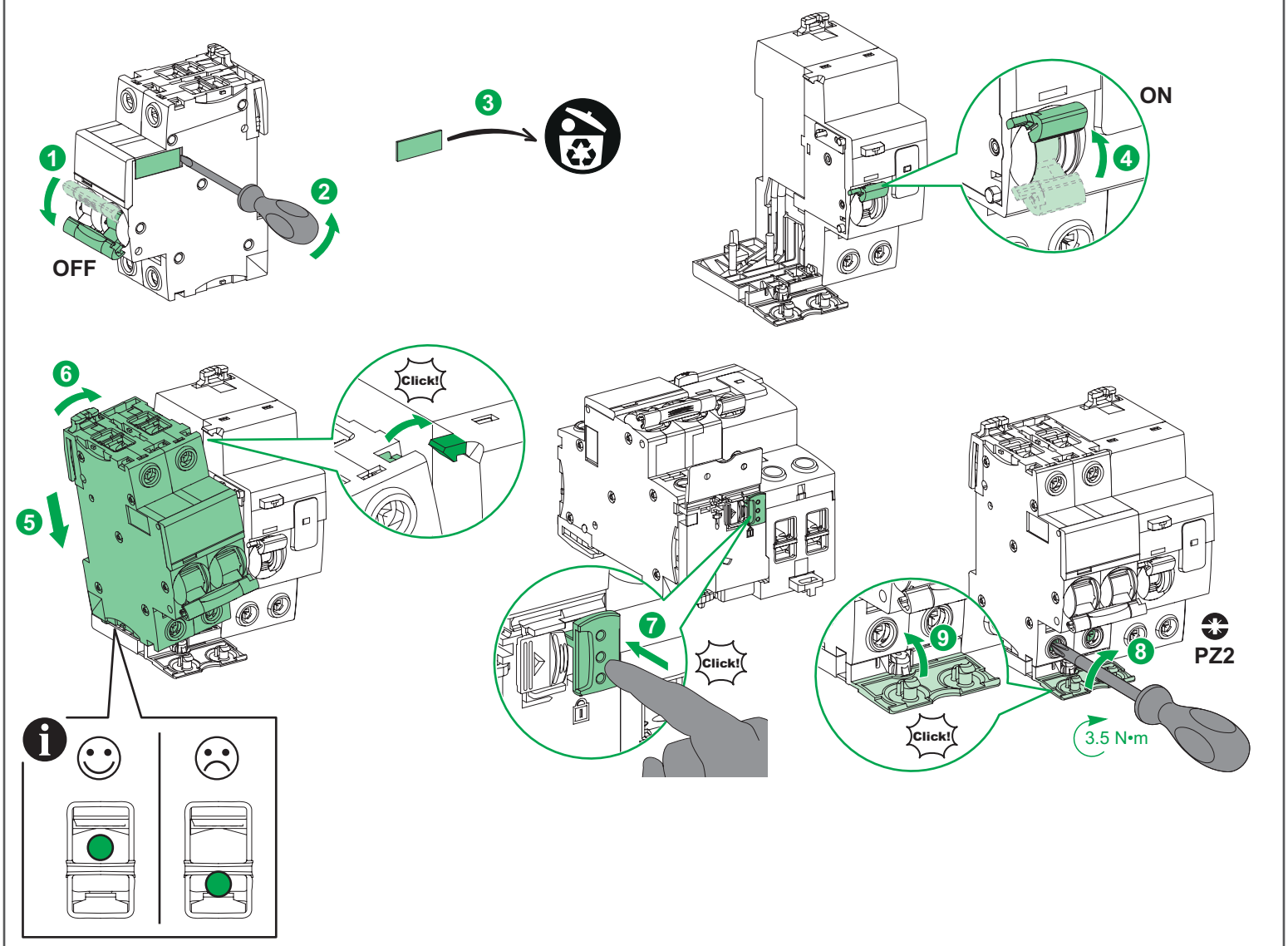

4.2 DIN Rail Installation / DIN 轨安装

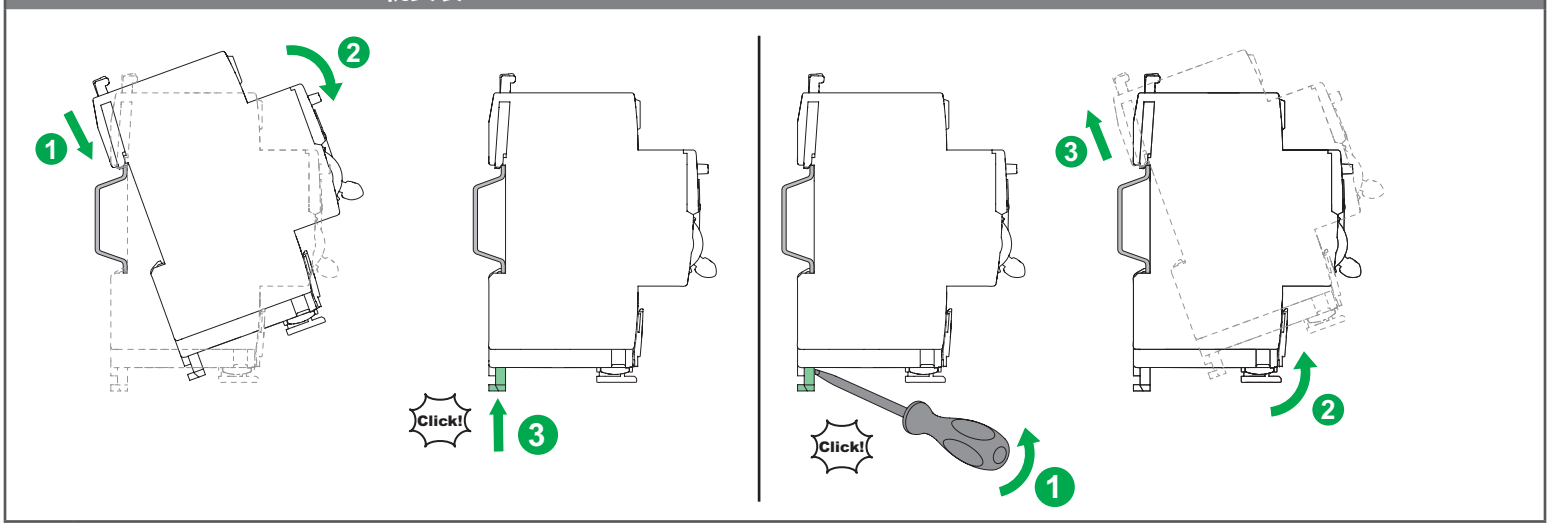

5 Wiring Diagram / 接线图

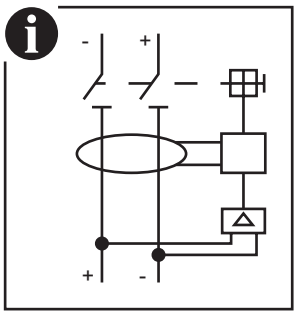

MCB Power Supply / 电源在 MCB 侧	RCD Power Supply / 电源在 RCD 侧
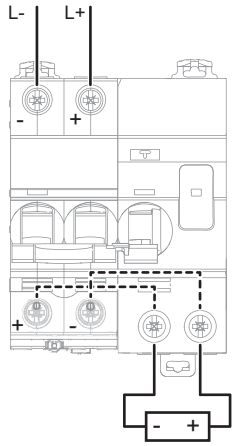	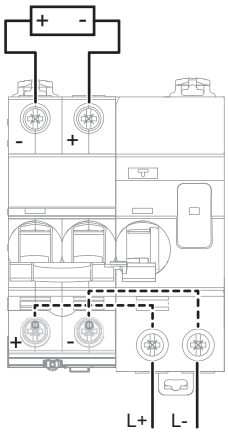

Note: When wiring , polarity must be strictly observed.
注: 接线时，请一定要注意极性。

	en	zh
L+	+ of power supply	电源正极
L-	- of power supply	电源负极
+	+ of MCB	断路器正极
-	- of MCB	断路器负极

Taking a polarized load as an example:
以有极性负载为例:

Load / 负载	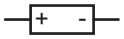

6 Wiring / 接线

⚠ WARNING / 警告

HAZARD OF FIRE ● Use only specified wiring cross-section with the equipment and comply with the specified wiring requirements. ● Tighten the connections to the specified torque values. ● Pay attention to the polarity of the device. **Failure to follow these instructions can result in death, serious injury, or equipment damage.**	**火灾危险** ● 仅为设备使用具有指定线规的接线，并遵守接线要求。 ● 以指定的扭矩值紧固接头。 ● 接线时请确保极性正确。 **不遵循上述说明可能导致人员伤亡或设备损坏。**

Note: For Wiring, Please refer to the wiring diagrams in the instruction sheet.
注: 接线请参考本说明书接线图部分。

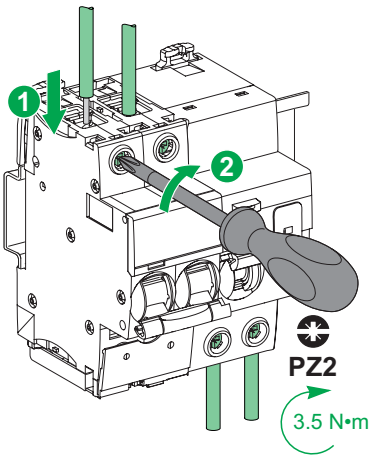

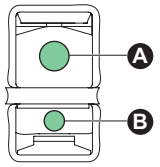

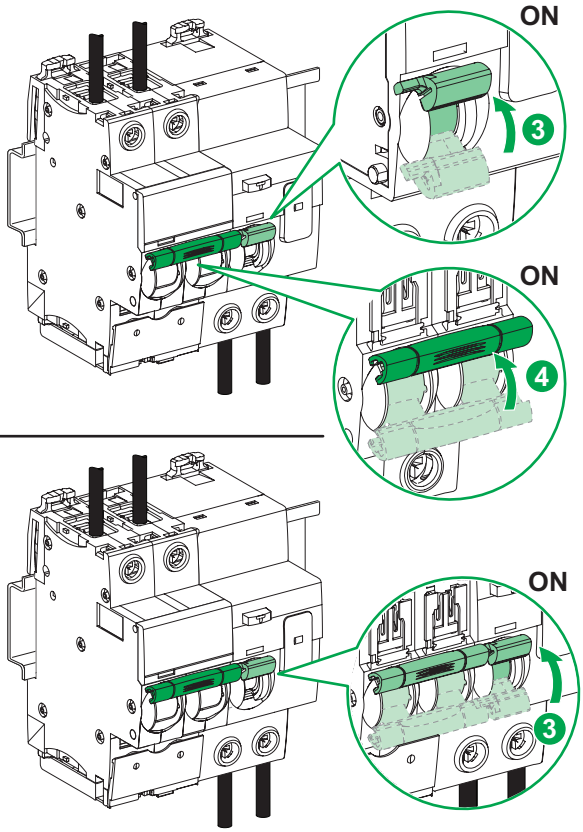

A			B		
		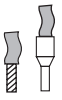			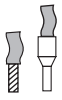
12 mm	1...25 mm²	1...16 mm²	12 mm	1...16 mm²	1...10 mm²

7 Operating Test / 运行测试

Note: Press the test button during commission, If it fails to trip, contact a qualified electrician immediately.
注: 安装完成后在投入运行前，请操作试验按钮，确认可正常动作后方可投入使用。

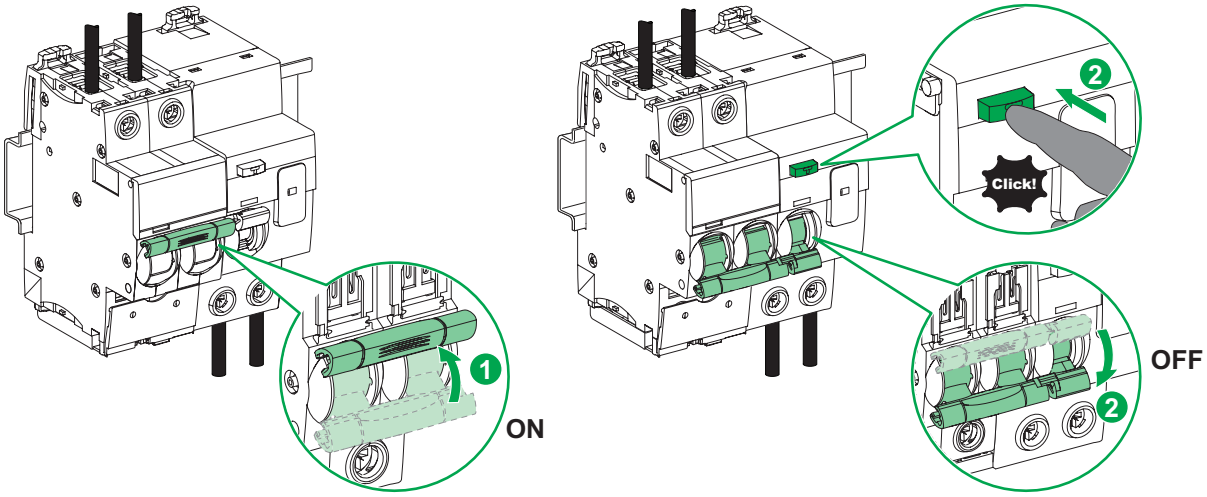

8 LED indicator / 产品状态指示窗口

Note: Do not use the LED indicator as a substitute for pushing the test button.
注: LED 指示灯不能替代测试按钮测试。

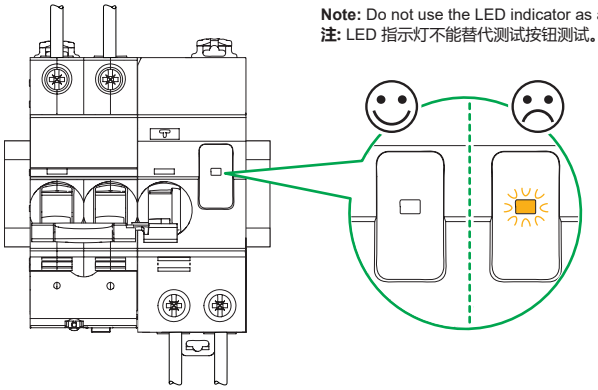

	en	zh
	Device is normal condition	设备运行正常
	Device is malfunctioned, Replace the device	产品功能异常，请及时更换产品

9 Sealent / 锁定安装

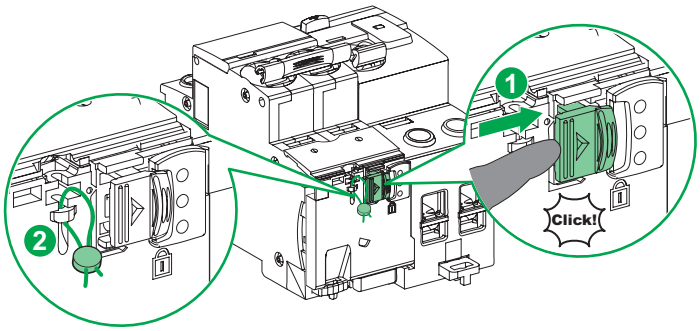

10 Removal / 拆除模块

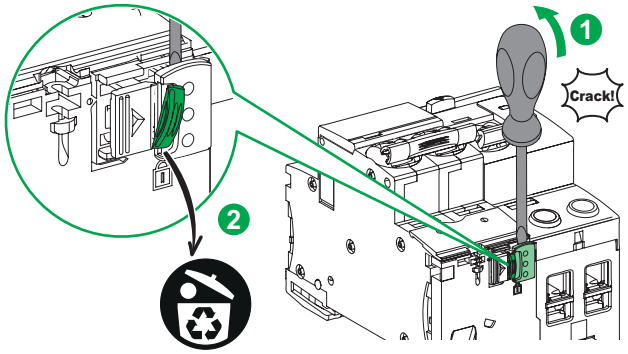

11 Cybersecurity Information / 网络安全说明

en General Cybersecurity Information
Scan this QR code to access the Schneider Electric Cybersecurity Portal.

zh 一般网络安全说明
扫描此二维码，可访问 Schneider Elec
Cybersecurity Portal。

上海施耐德低压终端电器有限公司
上海市闵行区瓶安路 1319 号
客户关怀热线：400 810 1315

www.se.com/zh

Printed on recycled paper.

© 2025 Schneider Electric - All rights reserved.